Excellent Integrated System Limited

Stocking Distributor

Click to view price, real time Inventory, Delivery & Lifecycle Information:

STMicroelectronics
SPC560B54L3C6E0Y

For any questions, you can email us directly:
sales@integrated-circuit.com

Distributor of STMicroelectronics: Excellent Integrated System Limited
Datasheet of SPC560B54L3C6E0Y - IC MCU 32BIT 768KB FLASH 100LQFP
Contact us: sales@integrated-circuit.com Website: www.integrated-circuit.com

life.augmented

SPC560B54x, SPC560B60x, SPC560B64x

32-bit MCU family built on the Power Architecture® for automotive body electronics applications

Datasheet - production data

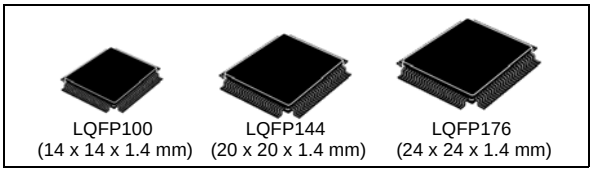

Features

- High performance 64 MHz e200z0h CPU
  - 32-bit Power Architecture® technology CPU
  - Up to 60 DMIPs operation
  - Variable length encoding (VLE)
- Memory
  - Up to 1.5 MB on-chip Code Flash with ECC
  - 64 KB on-chip Data Flash with ECC
  - Up to 96 KB on-chip SRAM with ECC
  - 8-entry MPU
- Interrupts
  - 16 priority levels
  - Non-maskable interrupt (NMI)
  - Up to 51 external interrupts lines including 27 wake-up lines
- 16-channel eDMA (linked to PITs, DSPI, ADCs, eMIOS, LINFlex and I^2C)
- GPIOs: 77 (LQFP100), 121 (LQFP144) and 149 (LQFP176)
- Timer units
  - 8-channel 32-bit periodic interrupt timer
  - 4-channel 32-bit system timer
  - System watchdog timer
  - Real-time clock timer
- eMIOS, 16-bit counter timed I/O units
  - Up to 64 channels with PWM/MC/IC/OC
  - Up to 10 counter basis
  - ADC diagnostic trigger via CTU
- One 10-bit and one 12-bit ADC with up to 53 channels
  - Extendable to 81 channels
  - Individual conversion registers
- Cross triggering unit (CTU)
- Dedicated diagnostic module for lighting
  - Advanced PWM generation
  - Time-triggered diagnostics
  - PWM-synchronized ADC measurements
- On-chip CAN/UART bootstrap loader
- Communications interfaces
  - Up to 6 FlexCAN (2.0B active) with 64 message buffers each
  - Up to 10 LINFlex/UART channels
  - Up to 6 buffered DSPI channels
  - I^2C interface
- Clock generation
  - 4 to 16 MHz fast external crystal oscillator
  - 32 kHz slow external crystal oscillator
  - 16 MHz fast internal RC oscillator
  - 128 kHz slow internal RC oscillator for low-power modes
  - Software-controlled FMPLL
  - Clock monitoring unit
- Low-power capabilities
  - Several low-power mode configurations
  - Ultra-low-power standby with RTC and communication
  - Fast wakeup schemes
- Exhaustive debugging capability
  - Nexus 2+ interface on LBGA208 package
  - Nexus 1 on all packages
- Voltage supply
  - Single 5 V or 3.3 V supply
  - On-chip voltage regulator
  - External ballast resistor support
- LQFP100, LQFP144, and LQFP176 packages; LBGA208 package for Nexus2+
- Operating temperature range -40 to 125 °C

Table 1. Device summary

Package	768 KByte Code Flash	1 MByte Code Flash	1.5 MByte Code Flash
LQFP176	—	SPC560B60L7	SPC560B64L7
LQFP144	SPC560B54L5	SPC560B60L5	SPC560B64L5
LQFP100	SPC560B54L3	SPC560B60L3	SPC560B64L3

This is information on a product in full production. www.st.com

Distributor of STMicroelectronics: Excellent Integrated System Limited
Datasheet of SPC560B54L3C6E0Y - IC MCU 32BIT 768KB FLASH 100LQFP
Contact us: sales@integrated-circuit.com Website: www.integrated-circuit.com

Contents

1 **Introduction 8**
1.1 Document overview 8
1.2 Description 8

2 **Block diagram 10**

3 **Package pinouts and signal descriptions 13**
3.1 Package pinouts 13
3.2 Pad configuration during reset phases 16
3.3 Pad configuration during standby mode exit 17
3.4 Voltage supply pins 17
3.5 Pad types 18
3.6 System pins 18
3.7 Functional port pins 19
3.8 Nexus 2+ pins 55

4 **Electrical characteristics 56**
4.1 Parameter classification 56
4.2 NVUSRO register 56
4.2.1 NVUSRO[PAD3V5V] field description 57
4.2.2 NVUSRO[OSCILLATOR_MARGIN] field description 57
4.2.3 NVUSRO[WATCHDOG_EN] field description 57
4.3 Absolute maximum ratings 58
4.4 Recommended operating conditions 59
4.5 Thermal characteristics 61
4.5.1 External ballast resistor recommendations 61
4.5.2 Package thermal characteristics 61
4.5.3 Power considerations 62
4.6 I/O pad electrical characteristics 63
4.6.1 I/O pad types 63
4.6.2 I/O input DC characteristics 63
4.6.3 I/O output DC characteristics 65
4.6.4 Output pin transition times 67

Distributor of STMicroelectronics: Excellent Integrated System Limited
Datasheet of SPC560B54L3C6E0Y - IC MCU 32BIT 768KB FLASH 100LQFP
Contact us: sales@integrated-circuit.com Website: www.integrated-circuit.com

4.6.5 I/O pad current specification 68
4.7 RESET electrical characteristics 76
4.8 Power management electrical characteristics 79
4.8.1 Voltage regulator electrical characteristics 79
4.8.2 Low voltage detector electrical characteristics 81
4.9 Power consumption 82
4.10 Flash memory electrical characteristics 84
4.10.1 Program/erase characteristics 84
4.10.2 Flash power supply DC characteristics 85
4.10.3 Start-up/Switch-off timings 86
4.11 Electromagnetic compatibility (EMC) characteristics 86
4.11.1 Designing hardened software to avoid noise problems 86
4.11.2 Electromagnetic interference (EMI) 87
4.11.3 Absolute maximum ratings (electrical sensitivity) 87
4.12 Fast external crystal oscillator (4 to 16 MHz) electrical characteristics . . 88
4.13 Slow external crystal oscillator (32 kHz) electrical characteristics 91
4.14 FMPLL electrical characteristics 93
4.15 Fast internal RC oscillator (16 MHz) electrical characteristics 94
4.16 Slow internal RC oscillator (128 kHz) electrical characteristics 95
4.17 ADC electrical characteristics 96
4.17.1 Introduction 96
4.17.2 Input impedance and ADC accuracy 97
4.17.3 ADC electrical characteristics 102
4.18 On-chip peripherals 107
4.18.1 Current consumption 107
4.18.2 DSPI characteristics 109
4.18.3 Nexus characteristics 115
4.18.4 JTAG characteristics 117

5 Package characteristics 118
5.1 ECOPACK® 118
5.2 Package mechanical data 118
5.2.1 LQFP176 118
5.2.2 LQFP144 120
5.2.3 LQFP100 122

Distributor of STMicroelectronics: Excellent Integrated System Limited
Datasheet of SPC560B54L3C6E0Y - IC MCU 32BIT 768KB FLASH 100LQFP
Contact us: sales@integrated-circuit.com Website: www.integrated-circuit.com

5.2.4 LBGA208 124

6 Ordering information 126

Appendix A Abbreviations 127

Revision history 128

Distributor of STMicroelectronics: Excellent Integrated System Limited
Datasheet of SPC560B54L3C6E0Y - IC MCU 32BIT 768KB FLASH 100LQFP
Contact us: sales@integrated-circuit.com Website: www.integrated-circuit.com

List of tables

Table 1. Device summary . . . 1
Table 2. SPC560B54/6x family comparison . . . 8
Table 3. SPC560B54/6x series block summary . . . 11
Table 4. Voltage supply pin descriptions . . . 17
Table 5. System pin descriptions . . . 19
Table 6. Functional port pin descriptions . . . 20
Table 7. Nexus 2+ pin descriptions . . . 55
Table 8. Parameter classifications . . . 56
Table 9. PAD3V5V field description . . . 57
Table 10. OSCILLATOR_MARGIN field description . . . 57
Table 11. WATCHDOG_EN field description . . . 57
Table 12. Absolute maximum ratings . . . 58
Table 13. Recommended operating conditions (3.3 V) . . . 59
Table 14. Recommended operating conditions (5.0 V) . . . 60
Table 15. LQFP thermal characteristics . . . 61
Table 16. I/O input DC electrical characteristics . . . 64
Table 17. I/O pull-up/pull-down DC electrical characteristics . . . 65
Table 18. SLOW configuration output buffer electrical characteristics . . . 65
Table 19. MEDIUM configuration output buffer electrical characteristics . . . 66
Table 20. FAST configuration output buffer electrical characteristics . . . 67
Table 21. Output pin transition times . . . 67
Table 22. I/O supply segments . . . 68
Table 23. I/O consumption . . . 69
Table 24. I/O weight . . . 70
Table 25. Reset electrical characteristics . . . 78
Table 26. Voltage regulator electrical characteristics . . . 80
Table 27. Low voltage detector electrical characteristics . . . 82
Table 28. Power consumption on VDD_BV and VDD_HV . . . 83
Table 29. Program and erase specifications . . . 84
Table 30. Flash module life . . . 85
Table 31. Flash read access timing . . . 85
Table 32. Flash power supply DC electrical characteristics . . . 86
Table 33. Start-up time/Switch-off time . . . 86
Table 34. EMI radiated emission measurement . . . 87
Table 35. ESD absolute maximum ratings . . . 88
Table 36. Latch-up results . . . 88
Table 37. Crystal description . . . 89
Table 38. Fast external crystal oscillator (4 to 16 MHz) electrical characteristics . . . 90
Table 39. Crystal motional characteristics . . . 92
Table 40. Slow external crystal oscillator (32 kHz) electrical characteristics . . . 93
Table 41. FMPLL electrical characteristics . . . 94
Table 42. Fast internal RC oscillator (16 MHz) electrical characteristics . . . 94
Table 43. Slow internal RC oscillator (128 kHz) electrical characteristics . . . 95
Table 44. ADC input leakage current . . . 102
Table 45. ADC_0 conversion characteristics (10-bit ADC_0) . . . 102
Table 46. ADC_1 conversion characteristics (12-bit ADC_1) . . . 104
Table 47. On-chip peripherals current consumption . . . 107
Table 48. DSPI characteristics . . . 109

Distributor of STMicroelectronics: Excellent Integrated System Limited
Datasheet of SPC560B54L3C6E0Y - IC MCU 32BIT 768KB FLASH 100LQFP
Contact us: sales@integrated-circuit.com Website: www.integrated-circuit.com

Table 49. Nexus characteristics . . . 115
Table 50. JTAG characteristics . . . 117
Table 51. LQFP176 mechanical data . . . 119
Table 52. LQFP144 mechanical data . . . 120
Table 53. LQFP100 mechanical data . . . 122
Table 54. LBGA208 mechanical data . . . 124
Table 55. Abbreviations . . . 127
Table 56. Revision history . . . 128

Distributor of STMicroelectronics: Excellent Integrated System Limited
Datasheet of SPC560B54L3C6E0Y - IC MCU 32BIT 768KB FLASH 100LQFP
Contact us: sales@integrated-circuit.com Website: www.integrated-circuit.com

List of figures

Figure 1. SPC560B54/6x block diagram . . . 10
Figure 2. LQFP176 pin configuration . . . 13
Figure 3. LQFP144 pin configuration . . . 14
Figure 4. LQFP100 pin configuration . . . 15
Figure 5. LBGA208 configuration . . . 16
Figure 6. I/O input DC electrical characteristics definition . . . 64
Figure 7. Start-up reset requirements . . . 77
Figure 8. Noise filtering on reset signal . . . 77
Figure 9. Voltage regulator capacitance connection . . . 79
Figure 10. Low voltage detector vs reset . . . 82
Figure 11. Crystal oscillator and resonator connection scheme . . . 89
Figure 12. Fast external crystal oscillator (4 to 16 MHz) timing diagram . . . 90
Figure 13. Crystal oscillator and resonator connection scheme . . . 91
Figure 14. Equivalent circuit of a quartz crystal . . . 92
Figure 15. Slow external crystal oscillator (32 kHz) timing diagram . . . 93
Figure 16. ADC_0 characteristic and error definitions . . . 97
Figure 17. Input equivalent circuit (precise channels) . . . 98
Figure 18. Input equivalent circuit (extended channels) . . . 99
Figure 19. Transient behavior during sampling phase . . . 99
Figure 20. Spectral representation of input signal . . . 101
Figure 21. ADC_1 characteristic and error definitions . . . 104
Figure 22. DSPI classic SPI timing — master, CPHA = 0 . . . 111
Figure 23. DSPI classic SPI timing — master, CPHA = 1 . . . 112
Figure 24. DSPI classic SPI timing — slave, CPHA = 0 . . . 112
Figure 25. DSPI classic SPI timing — slave, CPHA = 1 . . . 113
Figure 26. DSPI modified transfer format timing — master, CPHA = 0 . . . 113
Figure 27. DSPI modified transfer format timing — master, CPHA = 1 . . . 114
Figure 28. DSPI modified transfer format timing — slave, CPHA = 0 . . . 114
Figure 29. DSPI modified transfer format timing — slave, CPHA = 1 . . . 115
Figure 30. DSPI PCS strobe (PCSS) timing . . . 115
Figure 31. Nexus TDI, TMS, TDO timing . . . 116
Figure 32. Timing diagram — JTAG boundary scan . . . 117
Figure 33. LQFP176 package mechanical drawing . . . 118
Figure 34. LQFP144 package mechanical drawing . . . 120
Figure 35. LQFP100 package mechanical drawing . . . 122
Figure 36. LBGA208 package mechanical drawing . . . 124
Figure 37. Commercial product code structure . . . 126

Distributor of STMicroelectronics: Excellent Integrated System Limited
Datasheet of SPC560B54L3C6E0Y - IC MCU 32BIT 768KB FLASH 100LQFP
Contact us: sales@integrated-circuit.com Website: www.integrated-circuit.com

1 Introduction

1.1 Document overview

This document describes the features of the family and options available within the family members, and highlights important electrical and physical characteristics of the device.

1.2 Description

This family of 32-bit system-on-chip (SoC) microcontrollers is the latest achievement in integrated automotive application controllers. It belongs to an expanding family of automotive-focused products designed to address the next wave of body electronics applications within the vehicle.

The advanced and cost-efficient e200z0h host processor core of this automotive controller family complies with the Power Architecture technology and only implements the VLE (variable-length encoding) APU (Auxiliary Processor Unit), providing improved code density. It operates at speeds of up to 64 MHz and offers high performance processing optimized for low power consumption. It capitalizes on the available development infrastructure of current Power Architecture devices and is supported with software drivers, operating systems and configuration code to assist with users implementations.

Table 2. SPC560B54/6x family comparison(1)

Feature	SPC560B54		SPC560B60			SPC560B64			
CPU	e200z0h								
Execution speed(2)	Up to 64 MHz								
Code flash memory	768 KB		1 MB			1.5 MB			
Data flash memory	64 (4 × 16) KB								
SRAM	64 KB		80 KB			96 KB			
MPU	8-entry								
eDMA	16 ch								
10-bit ADC	Yes								
dedicated(3)	7 ch	15 ch	7 ch	15 ch	29 ch	7 ch	15 ch	29 ch	29 ch
shared with 12-bit ADC	19 ch								
12-bit ADC	Yes								
dedicated(4)	5 ch								
shared with 10-bit ADC	19 ch								
Total timer I/O(5) eMIOS	37 ch, 16-bit	64 ch, 16-bit	37 ch, 16-bit	64 ch, 16-bit	64 ch, 16-bit	37 ch, 16-bit	64 ch,16-bit	64 ch, 16-bit	64 ch, 16-bit
Counter / OPWM / ICOC(6)	10 ch								
O(I)PWM / OPWFMB / OPWMCB / ICOC(7)	7 ch								
O(I)PWM / ICOC(8)	7 ch	14 ch	7 ch	14 ch	14 ch	7 ch	14 ch	14 ch	14 ch

Distributor of STMicroelectronics: Excellent Integrated System Limited
Datasheet of SPC560B54L3C6E0Y - IC MCU 32BIT 768KB FLASH 100LQFP
Contact us: sales@integrated-circuit.com Website: www.integrated-circuit.com

Table 2. SPC560B54/6x family comparison[1] (continued)

Feature	SPC560B54		SPC560B60			SPC560B64			
OPWM / ICOC[9]	13 ch	33 ch	13 ch	33 ch	33 ch	13 ch	33 ch	33 ch	33 ch
SCI (LINFlex)	4	8	4	8	10	4	8	10	10
SPI (DSPI)	3	5	3	5	6	3	5	6	6
CAN (FlexCAN)	6								
I2C	1								
32 KHz oscillator	Yes								
GPIO[10]	77	121	77	121	149	77	121	149	149
Debug	JTAG								N2+
Package	LQFP 100	LQFP 144	LQFP 100	LQFP 144	LQFP 176	LQFP 100	LQFP 144	LQFP 176	LBGA208[11]

1. Feature set dependent on selected peripheral multiplexing; table shows example.
2. Based on 125 °C ambient operating temperature.
3. Not shared with 12-bit ADC, but possibly shared with other alternate functions.
4. Not shared with 10-bit ADC, but possibly shared with other alternate functions.
5. See the eMIOS section of the chip reference manual for information on the channel configuration and functions.
6. Each channel supports a range of modes including Modulus counters, PWM generation, Input Capture, Output Compare.
7. Each channel supports a range of modes including PWM generation with dead time, Input Capture, Output Compare.
8. Each channel supports a range of modes including PWM generation, Input Capture, Output Compare, Period and Pulse width measurement.
9. Each channel supports a range of modes including PWM generation, Input Capture, and Output Compare.
10. Maximum I/O count based on multiplexing with peripherals.
11. LBGA208 available only as development package for Nexus2+.

Distributor of STMicroelectronics: Excellent Integrated System Limited
Datasheet of SPC560B54L3C6E0Y - IC MCU 32BIT 768KB FLASH 100LQFP
Contact us: sales@integrated-circuit.com Website: www.integrated-circuit.com

2 Block diagram

Figure 1 shows a top-level block diagram of the SPC560B54/6x.

Figure 1. SPC560B54/6x block diagram

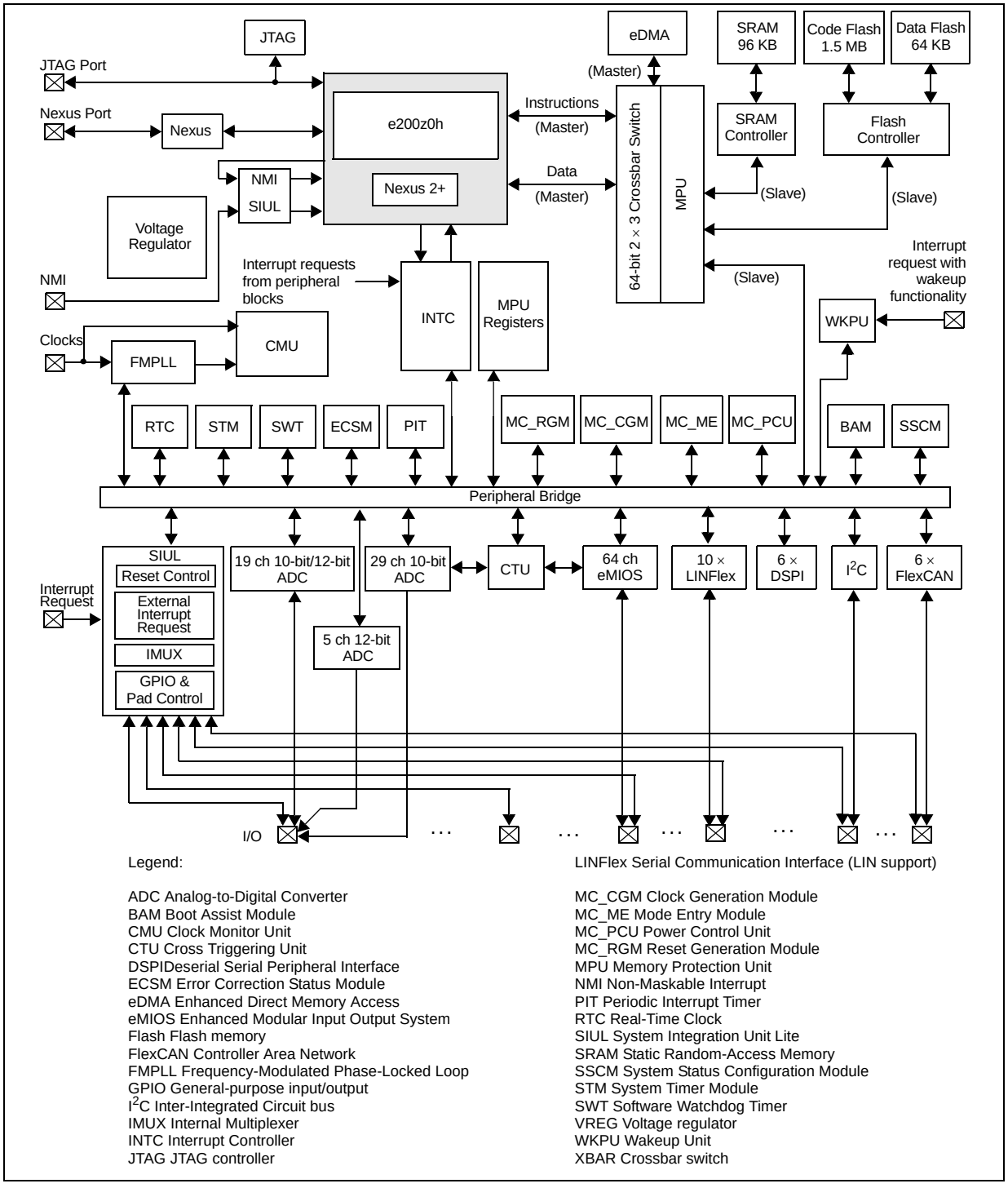

Legend:

ADC Analog-to-Digital Converter
BAM Boot Assist Module
CMU Clock Monitor Unit
CTU Cross Triggering Unit
DSPIDeserial Serial Peripheral Interface
ECSM Error Correction Status Module
eDMA Enhanced Direct Memory Access
eMIOS Enhanced Modular Input Output System
Flash Flash memory
FlexCAN Controller Area Network
FMPLL Frequency-Modulated Phase-Locked Loop
GPIO General-purpose input/output
I^{2}C Inter-Integrated Circuit bus
IMUX Internal Multiplexer
INTC Interrupt Controller
JTAG JTAG controller
LINFlex Serial Communication Interface (LIN support)
MC_CGM Clock Generation Module
MC_ME Mode Entry Module
MC_PCU Power Control Unit
MC_RGM Reset Generation Module
MPU Memory Protection Unit
NMI Non-Maskable Interrupt
PIT Periodic Interrupt Timer
RTC Real-Time Clock
SIUL System Integration Unit Lite
SRAM Static Random-Access Memory
SSCM System Status Configuration Module
STM System Timer Module
SWT Software Watchdog Timer
VREG Voltage regulator
WKPU Wakeup Unit
XBAR Crossbar switch

Distributor of STMicroelectronics: Excellent Integrated System Limited
Datasheet of SPC560B54L3C6E0Y - IC MCU 32BIT 768KB FLASH 100LQFP
Contact us: sales@integrated-circuit.com Website: www.integrated-circuit.com

Table 3 summarizes the functions of the blocks present on the SPC560B54/6x.

Table 3. SPC560B54/6x series block summary

Block	Function
Analog-to-digital converter (ADC)	Converts analog voltages to digital values
Boot assist module (BAM)	A block of read-only memory containing VLE code which is executed according to the boot mode of the device
Clock generation module (MC_CGM)	Provides logic and control required for the generation of system and peripheral clocks
Clock monitor unit (CMU)	Monitors clock source (internal and external) integrity
Cross triggering unit (CTU)	Enables synchronization of ADC conversions with a timer event from the eMIOS or from the PIT
Crossbar switch (XBAR)	Supports simultaneous connections between two master ports and three slave ports. The crossbar supports a 32-bit address bus width and a 64-bit data bus width.
Deserial serial peripheral interface (DSPI)	Provides a synchronous serial interface for communication with external devices
Enhanced direct memory access (eDMA)	Performs complex data transfers with minimal intervention from a host processor via "*n*" programmable channels
Enhanced modular input output system (eMIOS)	Provides the functionality to generate or measure events
Error correction status module (ECSM)	Provides a myriad of miscellaneous control functions for the device including program-visible information about configuration and revision levels, a reset status register, wakeup control for exiting sleep modes, and optional features such as information on memory errors reported by error-correcting codes
Flash memory	Provides non-volatile storage for program code, constants and variables
FlexCAN (controller area network)	Supports the standard CAN communications protocol
Frequency-modulated phase-locked loop (FMPLL)	Generates high-speed system clocks and supports programmable frequency modulation
Inter-integrated circuit (I^2C) bus	Two-wire bidirectional serial bus that provides a simple and efficient method of data exchange between devices
Internal multiplexer (IMUX) SIU subblock	Allows flexible mapping of peripheral interface on the different pins of the device
Interrupt controller (INTC)	Provides priority-based preemptive scheduling of interrupt requests
JTAG controller (JTAGC)	Provides the means to test chip functionality and connectivity while remaining transparent to system logic when not in test mode
LINFlex controller	Manages a high number of LIN (Local Interconnect Network protocol) messages efficiently with a minimum of CPU load
Memory protection unit (MPU)	Provides hardware access control for all memory references generated in a device

Distributor of STMicroelectronics: Excellent Integrated System Limited
Datasheet of SPC560B54L3C6E0Y - IC MCU 32BIT 768KB FLASH 100LQFP
Contact us: sales@integrated-circuit.com Website: www.integrated-circuit.com

Table 3. SPC560B54/6x series block summary (continued)

Block	Function
Mode entry module (MC_ME)	Provides a mechanism for controlling the device operational mode and mode transition sequences in all functional states; also manages the power control unit, reset generation module and clock generation module, and holds the configuration, control and status registers accessible for applications
Non-maskable interrupt (NMI)	Handles external events that must produce an immediate response, such as power down detection
Periodic interrupt timer (PIT)	Produces periodic interrupts and triggers
Power control unit (MC_PCU)	Reduces the overall power consumption by disconnecting parts of the device from the power supply via a power switching device; device components are grouped into sections called “power domains” which are controlled by the PCU
Real-time counter (RTC)	A free running counter used for time keeping applications, the RTC can be configured to generate an interrupt at a predefined interval independent of the mode of operation (run mode or low-power mode)
Reset generation module (MC_RGM)	Centralizes reset sources and manages the device reset sequence of the device
Static random-access memory (SRAM)	Provides storage for program code, constants, and variables
System integration unit lite (SIUL)	Provides control over all the electrical pad controls and up 32 ports with 16 bits of bidirectional, general-purpose input and output signals and supports up to 32 external interrupts with trigger event configuration
System status and configuration module (SSCM)	Provides system configuration and status data (such as memory size and status, device mode and security status), device identification data, debug status port enable and selection, and bus and peripheral abort enable/disable
System timer module (STM)	Provides a set of output compare events to support AUTOSAR (Automotive Open System Architecture) and operating system tasks
Software watchdog timer (SWT)	Provides protection from runaway code
Wakeup unit (WKPU)	The wakeup unit supports up to 27 external sources that can generate interrupts or wakeup events, of which 1 can cause non-maskable interrupt requests or wakeup events.

Distributor of STMicroelectronics: Excellent Integrated System Limited
Datasheet of SPC560B54L3C6E0Y - IC MCU 32BIT 768KB FLASH 100LQFP
Contact us: sales@integrated-circuit.com Website: www.integrated-circuit.com

3 Package pinouts and signal descriptions

3.1 Package pinouts

The available LQFP pinouts and the ballmap are provided in the following figures. For pin signal descriptions, please see *Table 6*.

Figure 2 shows the SPC560B54/6x in the LQFP176 package.

Figure 2. LQFP176 pin configuration

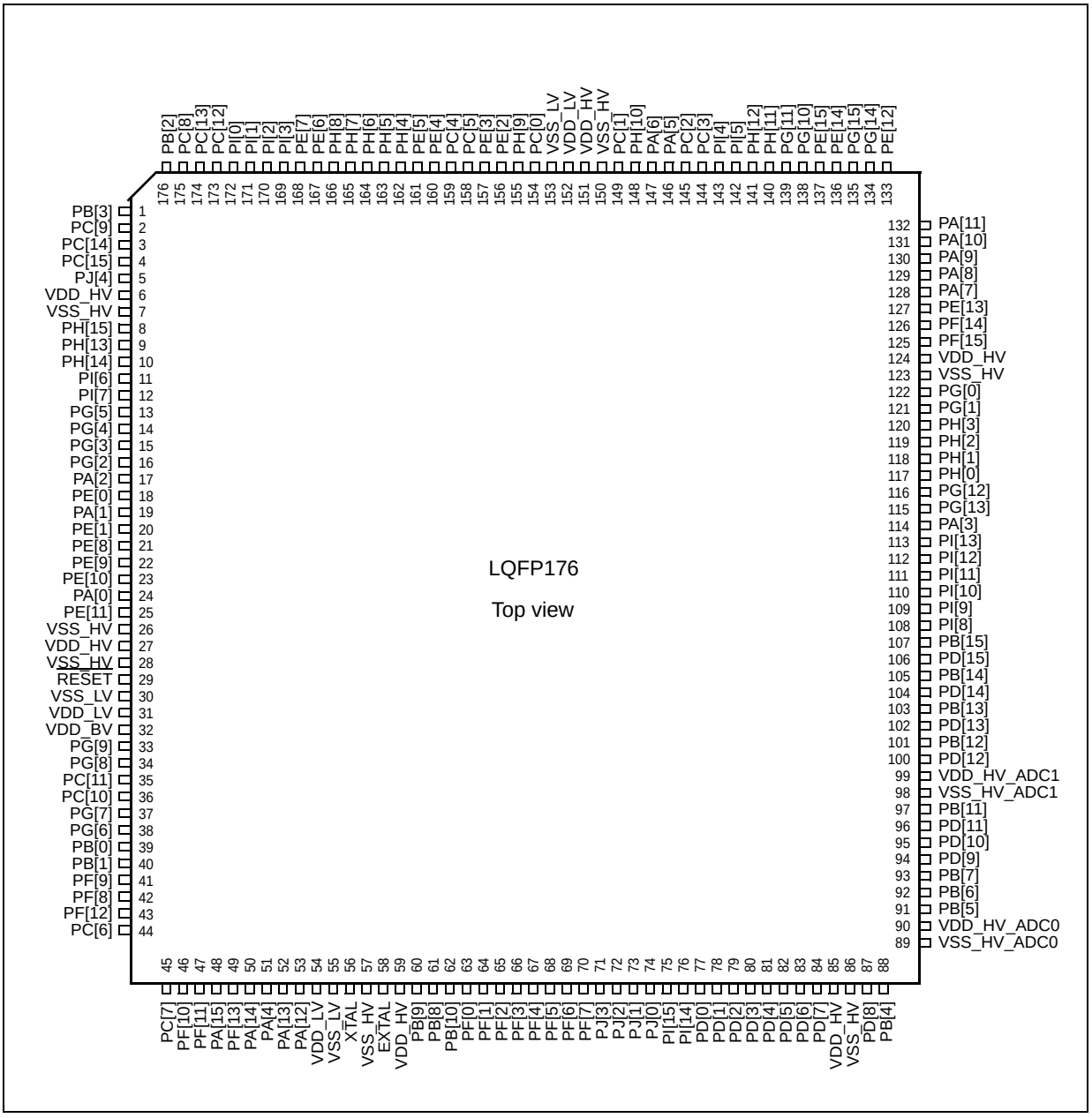

Distributor of STMicroelectronics: Excellent Integrated System Limited
Datasheet of SPC560B54L3C6E0Y - IC MCU 32BIT 768KB FLASH 100LQFP
Contact us: sales@integrated-circuit.com Website: www.integrated-circuit.com

Figure 3 shows the SPC560B54/6x in the LQFP144 package.

Figure 3. LQFP144 pin configuration

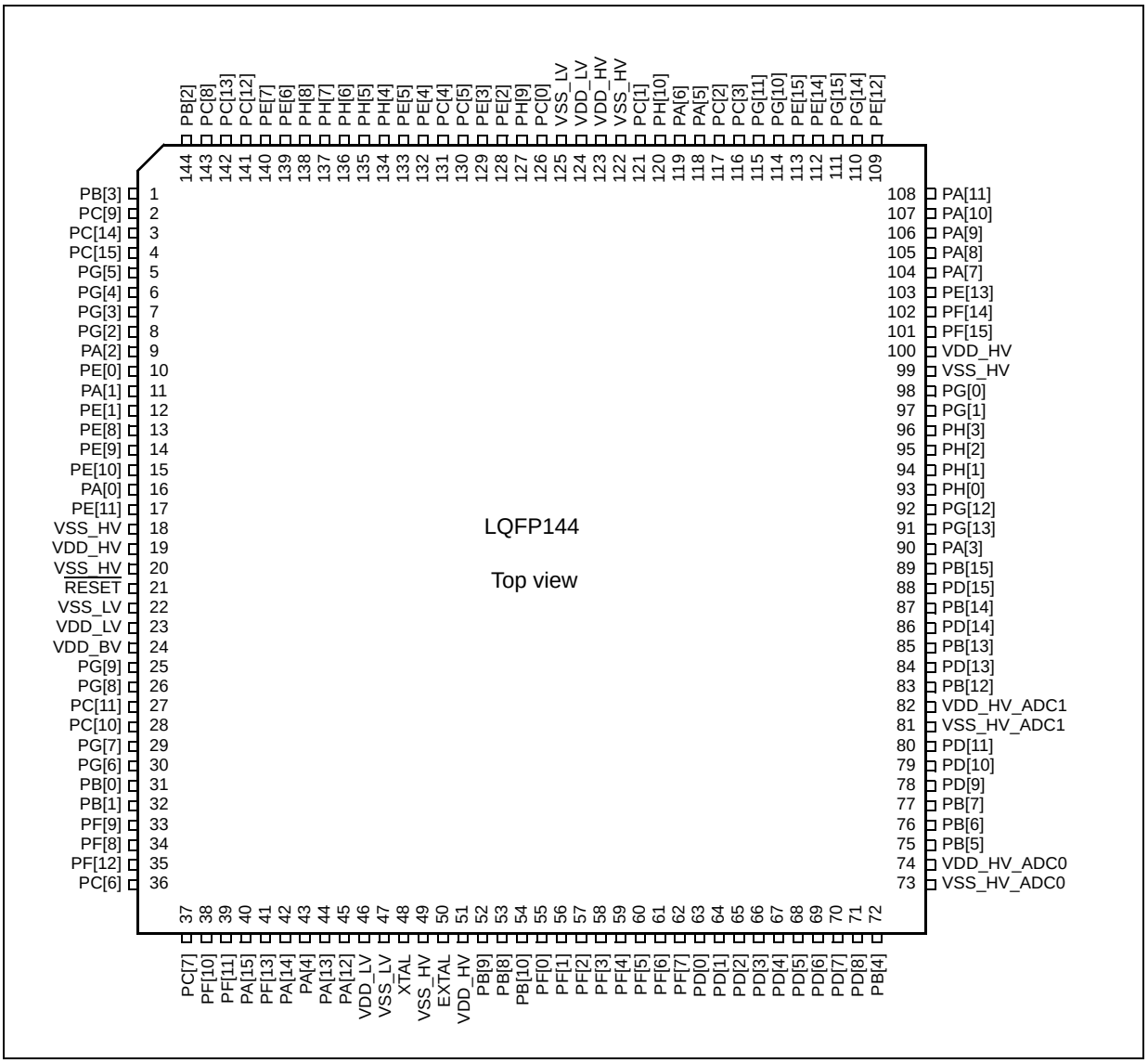

Figure 4 shows the SPC560B54/6x in the LQFP100 package.

Distributor of STMicroelectronics: Excellent Integrated System Limited
Datasheet of SPC560B54L3C6E0Y - IC MCU 32BIT 768KB FLASH 100LQFP
Contact us: sales@integrated-circuit.com Website: www.integrated-circuit.com

Figure 4. LQFP100 pin configuration

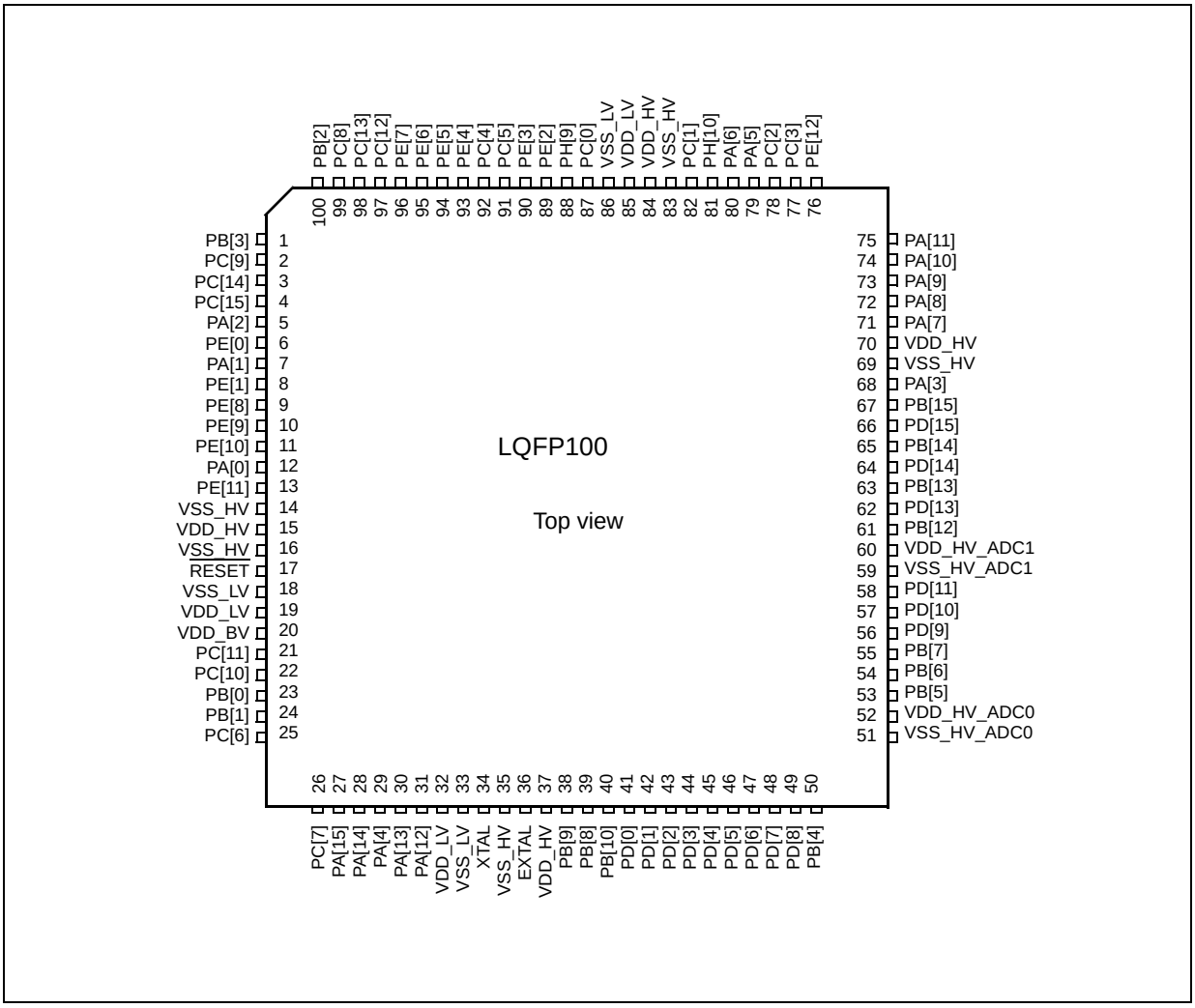

Figure 5 shows the SPC560B54/6x in the LBGA208 package.

Distributor of STMicroelectronics: Excellent Integrated System Limited
Datasheet of SPC560B54L3C6E0Y - IC MCU 32BIT 768KB FLASH 100LQFP
Contact us: sales@integrated-circuit.com Website: www.integrated-circuit.com

	1	2	3	4	5	6	7	8	9	10	11	12	13	14	15	16	
A	PC[8]	PC[13]	PH[15]	PJ[4]	PH[8]	PH[4]	PC[5]	PC[0]	PI[0]	PI[1]	PC[2]	PI[4]	PE[15]	PH[11]	NC	NC	A
B	PC[9]	PB[2]	PH[13]	PC[12]	PE[6]	PH[5]	PC[4]	PH[9]	PH[10]	PI[2]	PC[3]	PG[11]	PG[15]	PG[14]	PA[11]	PA[10]	B
C	PC[14]	VDD_HV	PB[3]	PE[7]	PH[7]	PE[5]	PE[3]	VSS_LV	PC[1]	PI[3]	PA[5]	PI[5]	PE[14]	PE[12]	PA[9]	PA[8]	C
D	PH[14]	PI[6]	PC[15]	PI[7]	PH[6]	PE[4]	PE[2]	VDD_LV	VDD_HV	NC	PA[6]	PH[12]	PG[10]	PF[14]	PE[13]	PA[7]	D
E	PG[4]	PG[5]	PG[3]	PG[2]									PG[1]	PG[0]	PF[15]	VDD_HV	E
F	PE[0]	PA[2]	PA[1]	PE[1]									PH[0]	PH[1]	PH[3]	PH[2]	F
G	PE[9]	PE[8]	PE[10]	PA[0]			VSS_HV	VSS_HV	VSS_HV	VSS_HV			VDD_HV	PI[12]	PI[13]	MSEO	G
H	VSS_HV	PE[11]	VDD_HV	NC			VSS_HV	VSS_HV	VSS_HV	VSS_HV			MDO3	MDO2	MDO0	MDO1	H
J	RESET	VSS_LV	NC	NC			VSS_HV	VSS_HV	VSS_HV	VSS_HV			PI[8]	PI[9]	PI[10]	PI[11]	J
K	EVTI	NC	VDD_BV	VDD_LV			VSS_HV	VSS_HV	VSS_HV	VSS_HV			VDD_HV_ADC1	PG[12]	PA[3]	PG[13]	K
L	PG[9]	PG[8]	NC	EVTO									PB[15]	PD[15]	PD[14]	PB[14]	L
M	PG[7]	PG[6]	PC[10]	PC[11]									PB[13]	PD[13]	PD[12]	PB[12]	M
N	PB[1]	PF[9]	PB[0]	VDD_HV	PJ[0]	PA[4]	VSS_LV	EXTAL	VDD_HV	PF[0]	PF[4]	VSS_HV_ADC1	PB[11]	PD[10]	PD[9]	PD[11]	N
P	PF[8]	PJ[3]	PC[7]	PJ[2]	PJ[1]	PA[14]	VDD_LV	XTAL	PB[10]	PF[1]	PF[5]	PD[0]	PD[3]	VDD_HV_ADC0	PB[6]	PB[7]	P
R	PF[12]	PC[6]	PF[10]	PF[11]	VDD_HV	PA[15]	PA[13]	PI[14]	XTAL32	PF[3]	PF[7]	PD[2]	PD[4]	PD[7]	VSS_HV_ADC0	PB[5]	R
T	NC	NC	NC	MCKO	NC	PF[13]	PA[12]	PI[15]	EXTAL32	PF[2]	PF[6]	PD[1]	PD[5]	PD[6]	PD[8]	PB[4]	T
	1	2	3	4	5	6	7	8	9	10	11	12	13	14	15	16	

NOTE: The LBGA208 is available only as development package for Nexus 2+.

NC = Not connected

Figure 5. LBGA208 configuration

3.2 Pad configuration during reset phases

All pads have a fixed configuration under reset.

During the power-up phase, all pads are forced to tristate.

After power-up phase, all pads are tristate with the following exceptions:

- PA[9] (FAB) is pull-down. Without external strong pull-up the device starts fetching from flash.
- PA[8], PC[0] and PH[9:10] are in input weak pull-up when out of reset.
- RESET pad is driven low by the device till 40 FIRC clock cycles after phase2 completion. Minimum phase3 duration is 40 FIRC cycles.
- Nexus output pads (MDO[n], MCKO, EVTO, MSEO) are forced to output.

Distributor of STMicroelectronics: Excellent Integrated System Limited
Datasheet of SPC560B54L3C6E0Y - IC MCU 32BIT 768KB FLASH 100LQFP
Contact us: sales@integrated-circuit.com Website: www.integrated-circuit.com

3.3 Pad configuration during standby mode exit

Pad configuration (input buffer enable, pull enable) for low-power wakeup pads is controlled by both the SIUL and WKPU modules. During standby exit, all low power pads PA[0,1,2,4,15], PB[1,3,8,9,10][a], PC[7,9,11], PD[0,1], PE[0,9,11], PF[9,11,13][b], PG[3,5,7,9][b], PI[1,3][c] are configured according to their respective configuration done in the WKPU module. All other pads will have the same configuration as expected after a reset.

The TDO pad has been moved into the STANDBY domain in order to allow low-power debug handshaking in STANDBY mode. However, no pull-resistor is active on the TDO pad while in STANDBY mode. At this time the pad is configured as an input. When no debugger is connected the TDO pad is floating causing additional current consumption.

To avoid the extra consumption TDO must be connected. An external pull-up resistor in the range of 47–100 kOhms should be added between the TDO pin and VDD. Only if the TDO pin is used as an application pin and a pull-up cannot be used should a pull-down resistor with the same value be used instead between the TDO pin and GND.

3.4 Voltage supply pins

Voltage supply pins are used to provide power to the device. Three dedicated VDD_LV/VSS_LV supply pairs are used for 1.2 V regulator stabilization.

Table 4. Voltage supply pin descriptions

Port pin	Function	Pin number			
		LQFP100	LQFP144	LQFP176	LBGA208
VDD_HV	Digital supply voltage	15, 37, 70, 84	19, 51, 100, 123	6, 27, 59, 85, 124, 151	C2, D9, E16, G13, H3, N4, N9, R5
VSS_HV	Digital ground	14, 16, 35, 69, 83	18, 20, 49, 99, 122	7, 26, 28, 57, 86, 123, 150	G7, G8, G9, G10, H7, H8, H9, H10, J7, J8, J9, J10, K7, K8, K9, K10
VDD_LV	1.2 V decoupling pins. Decoupling capacitor must be connected between these pins and the nearest V_{SS_LV} pin.(1)	19, 32, 85	23, 46, 124	31, 54, 152	D8, K4, P7
VSS_LV	1.2 V decoupling pins. Decoupling capacitor must be connected between these pins and the nearest V_{DD_LV} pin.(1)	18, 33, 86	22, 47, 125	30, 55, 153	C8, J2, N7

a. PB[8, 9] ports have wakeup functionality in all modes except STANDBY.

b. PF[9,11,13], PG[3,5,7,9], PI[1,3] are not available in the 100-pin LQFP.

c. PI[1,3] are not available in the 144-pin LQFP.

Distributor of STMicroelectronics: Excellent Integrated System Limited
Datasheet of SPC560B54L3C6E0Y - IC MCU 32BIT 768KB FLASH 100LQFP
Contact us: sales@integrated-circuit.com Website: www.integrated-circuit.com

Table 4. Voltage supply pin descriptions (continued)

Port pin	Function	Pin number			
		LQFP100	LQFP144	LQFP176	LBGA208
VDD_BV	Internal regulator supply voltage	20	24	32	K3
VSS_HV_ADC0	Reference ground and analog ground for the A/D converter 0 (10-bit)	51	73	89	R15
VDD_HV_ADC0	Reference voltage and analog supply for the A/D converter 0 (10-bit)	52	74	90	P14
VSS_HV_ADC1	Reference ground and analog ground for the A/D converter 1 (12-bit)	59	81	98	N12
VDD_HV_ADC1	Reference voltage and analog supply for the A/D converter 1 (12-bit)	60	82	99	K13

1. A decoupling capacitor must be placed between each of the three VDD_LV/VSS_LV supply pairs to ensure stable voltage (see the recommended operating conditions in the device datasheet).

3.5 Pad types

In the device the following types of pads are available for system pins and functional port pins:

S = Slow[d]

M = Medium[d] [e]

F = Fast[d] [e]

I = Input only with analog feature[d]

J = Input/Output ('S' pad) with analog feature

X = Oscillator

3.6 System pins

The system pins are listed in *Table 5*.

d. See the I/O pad electrical characteristics in the chip datasheet for details.

e. All medium and fast pads are in slow configuration by default at reset and can be configured as fast or medium. The only exception is PC[1] which is in medium configuration by default (see the PCR.SRC description in the chip reference manual, Pad Configuration Registers (PCR0–PCR148)).

Distributor of STMicroelectronics: Excellent Integrated System Limited
Datasheet of SPC560B54L3C6E0Y - IC MCU 32BIT 768KB FLASH 100LQFP
Contact us: sales@integrated-circuit.com Website: www.integrated-circuit.com

Table 5. System pin descriptions

Port pin	Function	I/O direction	Pad type	RESET configuration	Pin number			
					LQFP 100	LQFP 144	LQFP 176	LBGA 208(1)
RESET	Bidirectional reset with Schmitt-Trigger characteristics and noise filter.	I/O	M	Input weak pull-up after RGM PHASE2 and 40 FIRC cycles	17	21	29	J1
EXTAL	Analog output of the oscillator amplifier circuit, when the oscillator is not in bypass mode. Analog input for the clock generator when the oscillator is in bypass mode.	I/O	X	Tristate	36	50	58	N8
XTAL	Analog input of the oscillator amplifier circuit. Needs to be grounded if oscillator bypass mode is used.	I	X	Tristate	34	48	56	P8

1. LBGA208 available only as development package for Nexus2+.

3.7 Functional port pins

The functional port pins are listed in *Table 6*.

Distributor of STMicroelectronics: Excellent Integrated System Limited
Datasheet of SPC560B54L3C6E0Y - IC MCU 32BIT 768KB FLASH 100LQFP
Contact us: sales@integrated-circuit.com Website: www.integrated-circuit.com

Table 6. Functional port pin descriptions

Port pin	PCR	Alternate function[1]	Function	Peripheral	I/O direction[2]	Pad type	RESET configuration[3]	Pin number			
								LQFP 100	LQFP 144	LQFP 176	LBGA 208[4]
Port A											
PA[0]	PCR[0]	AF0 AF1 AF2 AF3 —	GPIO[0] E0UC[0] CLKOUT E0UC[13] WKPU[19][5]	SIUL eMIOS_0 MC_CGM eMIOS_0 WKPU	I/O I/O O I/O I	M	Tristate	12	16	24	G4
PA[1]	PCR[1]	AF0 AF1 AF2 AF3 —	GPIO[1] E0UC[1] NMI[6] — WKPU[2][5]	SIUL eMIOS_0 WKPU — WKPU	I/O I/O I — I	S	Tristate	7	11	19	F3
PA[2]	PCR[2]	AF0 AF1 AF2 AF3 —	GPIO[2] E0UC[2] — MA[2] WKPU[3][5]	SIUL eMIOS_0 — ADC_0 WKPU	I/O I/O — O I	S	Tristate	5	9	17	F2
PA[3]	PCR[3]	AF0 AF1 AF2 AF3 — —	GPIO[3] E0UC[3] LIN5TX CS4_1 EIRQ[0] ADC1_S[0]	SIUL eMIOS_0 LINFlex_5 DSPI_1 SIUL ADC_1	I/O I/O O O I I	J	Tristate	68	90	114	K15

Distributor of STMicroelectronics: Excellent Integrated System Limited
Datasheet of SPC560B54L3C6E0Y - IC MCU 32BIT 768KB FLASH 100LQFP
Contact us: sales@integrated-circuit.com Website: www.integrated-circuit.com

Table 6. Functional port pin descriptions (continued)

Port pin	PCR	Alternate function[1]	Function	Peripheral	I/O direction[2]	Pad type	RESET configuration[3]	Pin number			
								LQFP 100	LQFP 144	LQFP 176	LBGA 208[4]
PA[4]	PCR[4]	AF0 AF1 AF2 AF3 — —	GPIO[4] E0UC[4] — CS0_1 LIN5RX WKPU[9][5]	SIUL eMIOS_0 — DSPI_1 LINFlex_5 WKPU	I/O I/O — I/O I I	S	Tristate	29	43	51	N6
PA[5]	PCR[5]	AF0 AF1 AF2 AF3	GPIO[5] E0UC[5] LIN4TX —	SIUL eMIOS_0 LINFlex_4 —	I/O I/O O —	M	Tristate	79	118	146	C11
PA[6]	PCR[6]	AF0 AF1 AF2 AF3 — —	GPIO[6] E0UC[6] — CS1_1 EIRQ[1] LIN4RX	SIUL eMIOS_0 — DSPI_1 SIUL LINFlex_4	I/O I/O — O I I	S	Tristate	80	119	147	D11
PA[7]	PCR[7]	AF0 AF1 AF2 AF3 — —	GPIO[7] E0UC[7] LIN3TX — EIRQ[2] ADC1_S[1]	SIUL eMIOS_0 LINFlex_3 — SIUL ADC_1	I/O I/O O — I I	J	Tristate	71	104	128	D16

Distributor of STMicroelectronics: Excellent Integrated System Limited
Datasheet of SPC560B54L3C6E0Y - IC MCU 32BIT 768KB FLASH 100LQFP
Contact us: sales@integrated-circuit.com Website: www.integrated-circuit.com

Table 6. Functional port pin descriptions (continued)

Port pin	PCR	Alternate function[1]	Function	Peripheral	I/O direction[2]	Pad type	RESET configuration[3]	Pin number			
								LQFP 100	LQFP 144	LQFP 176	LBGA 208[4]
PA[8]	PCR[8]	AF0 AF1 AF2 AF3 — N/A[7] —	GPIO[8] E0UC[8] E0UC[14] — EIRQ[3] ABS[0] LIN3RX	SIUL eMIOS_0 eMIOS_0 — SIUL BAM LINFlex_3	I/O I/O I/O — I I I	S	Input, weak pull-up	72	105	129	C16
PA[9]	PCR[9]	AF0 AF1 AF2 AF3 N/A[7]	GPIO[9] E0UC[9] — CS2_1 FAB	SIUL eMIOS_0 — DSPI_1 BAM	I/O I/O — O I	S	Pull-down	73	106	130	C15
PA[10]	PCR[10]	AF0 AF1 AF2 AF3 —	GPIO[10] E0UC[10] SDA LIN2TX ADC1_S[2]	SIUL eMIOS_0 I^2C_0 LINFlex_2 ADC_1	I/O I/O I/O O I	J	Tristate	74	107	131	B16
PA[11]	PCR[11]	AF0 AF1 AF2 AF3 — — —	GPIO[11] E0UC[11] SCL — EIRQ[16] LIN2RX ADC1_S[3]	SIUL eMIOS_0 I^2C_0 — SIUL LINFlex_2 ADC_1	I/O I/O I/O — I I I	J	Tristate	75	108	132	B15

Distributor of STMicroelectronics: Excellent Integrated System Limited
Datasheet of SPC560B54L3C6E0Y - IC MCU 32BIT 768KB FLASH 100LQFP
Contact us: sales@integrated-circuit.com Website: www.integrated-circuit.com

Table 6. Functional port pin descriptions (continued)

Port pin	PCR	Alternate function[1]	Function	Peripheral	I/O direction[2]	Pad type	RESET configuration[3]	Pin number			
								LQFP 100	LQFP 144	LQFP 176	LBGA 208[4]
PA[12]	PCR[12]	AF0 AF1 AF2 AF3 — —	GPIO[12] — E0UC[28] CS3_1 EIRQ[17] SIN_0	SIUL — eMIOS_0 DSPI_1 SIUL DSPI_0	I/O — I/O O I I	S	Tristate	31	45	53	T7
PA[13]	PCR[13]	AF0 AF1 AF2 AF3	GPIO[13] SOUT_0 E0UC[29] —	SIUL DSPI_0 eMIOS_0 —	I/O O I/O —	M	Tristate	30	44	52	R7
PA[14]	PCR[14]	AF0 AF1 AF2 AF3 —	GPIO[14] SCK_0 CS0_0 E0UC[0] EIRQ[4]	SIUL DSPI_0 DSPI_0 eMIOS_0 SIUL	I/O I/O I/O I/O I	M	Tristate	28	42	50	P6
PA[15]	PCR[15]	AF0 AF1 AF2 AF3 —	GPIO[15] CS0_0 SCK_0 E0UC[1] WKPU[10][5]	SIUL DSPI_0 DSPI_0 eMIOS_0 WKPU	I/O I/O I/O I/O I	M	Tristate	27	40	48	R6
Port B											
PB[0]	PCR[16]	AF0 AF1 AF2 AF3	GPIO[16] CAN0TX E0UC[30] LIN0TX	SIUL FlexCAN_0 eMIOS_0 LINFlex_0	I/O O I/O O	M	Tristate	23	31	39	N3

Distributor of STMicroelectronics: Excellent Integrated System Limited
Datasheet of SPC560B54L3C6E0Y - IC MCU 32BIT 768KB FLASH 100LQFP
Contact us: sales@integrated-circuit.com Website: www.integrated-circuit.com

Table 6. Functional port pin descriptions (continued)

Port pin	PCR	Alternate function[1]	Function	Peripheral	I/O direction[2]	Pad type	RESET configuration[3]	Pin number			
								LQFP 100	LQFP 144	LQFP 176	LBGA 208[4]
PB[1]	PCR[17]	AF0 AF1 AF2 AF3 — — —	GPIO[17] — E0UC[31] — WKPU[4][5] CAN0RX LIN0RX	SIUL — eMIOS_0 — WKPU FlexCAN_0 LINFlex_0	I/O — I/O — I I I	S	Tristate	24	32	40	N1
PB[2]	PCR[18]	AF0 AF1 AF2 AF3	GPIO[18] LIN0TX SDA E0UC[30]	SIUL LINFlex_0 I^2C_0 eMIOS_0	I/O O I/O I/O	M	Tristate	100	144	176	B2
PB[3]	PCR[19]	AF0 AF1 AF2 AF3 — —	GPIO[19] E0UC[31] SCL — WKPU[11][5] LIN0RX	SIUL eMIOS_0 I^2C_0 — WKPU LINFlex_0	I/O I/O I/O — I I	S	Tristate	1	1	1	C3
PB[4]	PCR[20]	AF0 AF1 AF2 AF3 — — —	— — — — ADC0_P[0] ADC1_P[0] GPIO[20]	— — — — ADC_0 ADC_1 SIUL	— — — — I I I	I	Tristate	50	72	88	T16

Distributor of STMicroelectronics: Excellent Integrated System Limited
Datasheet of SPC560B54L3C6E0Y - IC MCU 32BIT 768KB FLASH 100LQFP
Contact us: sales@integrated-circuit.com Website: www.integrated-circuit.com

Table 6. Functional port pin descriptions (continued)

Port pin	PCR	Alternate function[1]	Function	Peripheral	I/O direction[2]	Pad type	RESET configuration[3]	Pin number			
								LQFP 100	LQFP 144	LQFP 176	LBGA 208[4]
PB[5]	PCR[21]	AF0 AF1 AF2 AF3 — — —	— — — — ADC0_P[1] ADC1_P[1] GPIO[21]	— — — — ADC_0 ADC_1 SIUL	— — — — I I I	I	Tristate	53	75	91	R16
PB[6]	PCR[22]	AF0 AF1 AF2 AF3 — — —	— — — — ADC0_P[2] ADC1_P[2] GPIO[22]	— — — — ADC_0 ADC_1 SIUL	— — — — I I I	I	Tristate	54	76	92	P15
PB[7]	PCR[23]	AF0 AF1 AF2 AF3 — — —	— — — — ADC0_P[3] ADC1_P[3] GPIO[23]	— — — — ADC_0 ADC_1 SIUL	— — — — I I I	I	Tristate	55	77	93	P16

Distributor of STMicroelectronics: Excellent Integrated System Limited
Datasheet of SPC560B54L3C6E0Y - IC MCU 32BIT 768KB FLASH 100LQFP
Contact us: sales@integrated-circuit.com Website: www.integrated-circuit.com

Table 6. Functional port pin descriptions (continued)

Port pin	PCR	Alternate function[1]	Function	Peripheral	I/O direction[2]	Pad type	RESET configuration[3]	Pin number			
								LQFP 100	LQFP 144	LQFP 176	LBGA 208[4]
PB[8]	PCR[24]	AF0 AF1 AF2 AF3 — — — —	GPIO[24] — — — OSC32K_XTAL[8] WKPU[25][5] ADC0_S[0] ADC1_S[4]	SIUL — — — OSC32K WKPU ADC_0 ADC_1	I — — — — I[9] I I	I	—	39	53	61	R9
PB[9]	PCR[25]	AF0 AF1 AF2 AF3 — — — —	GPIO[25] — — — OSC32K_EXTAL[8] WKPU[26][5] ADC0_S[1] ADC1_S[5]	SIUL — — — OSC32K WKPU ADC_0 ADC_1	I — — — — I[9] I I	I	—	38	52	60	T9
PB[10]	PCR[26]	AF0 AF1 AF2 AF3 — — —	GPIO[26] — — — WKPU[8][5] ADC0_S[2] ADC1_S[6]	SIUL — — — WKPU ADC_0 ADC_1	I/O — — — I I I	J	Tristate	40	54	62	P9

Distributor of STMicroelectronics: Excellent Integrated System Limited
Datasheet of SPC560B54L3C6E0Y - IC MCU 32BIT 768KB FLASH 100LQFP
Contact us: sales@integrated-circuit.com Website: www.integrated-circuit.com

Table 6. Functional port pin descriptions (continued)

Port pin	PCR	Alternate function[1]	Function	Peripheral	I/O direction[2]	Pad type	RESET configuration[3]	Pin number			
								LQFP 100	LQFP 144	LQFP 176	LBGA 208[4]
PB[11]	PCR[27]	AF0 AF1 AF2 AF3 —	GPIO[27] E0UC[3] — CS0_0 ADC0_S[3]	SIUL eMIOS_0 — DSPI_0 ADC_0	I/O I/O — I/O I	J	Tristate	—	—	97	N13
PB[12]	PCR[28]	AF0 AF1 AF2 AF3 —	GPIO[28] E0UC[4] — CS1_0 ADC0_X[0]	SIUL eMIOS_0 — DSPI_0 ADC_0	I/O I/O — O I	J	Tristate	61	83	101	M16
PB[13]	PCR[29]	AF0 AF1 AF2 AF3 —	GPIO[29] E0UC[5] — CS2_0 ADC0_X[1]	SIUL eMIOS_0 — DSPI_0 ADC_0	I/O I/O — O I	J	Tristate	63	85	103	M13
PB[14]	PCR[30]	AF0 AF1 AF2 AF3 —	GPIO[30] E0UC[6] — CS3_0 ADC0_X[2]	SIUL eMIOS_0 — DSPI_0 ADC_0	I/O I/O — O I	J	Tristate	65	87	105	L16
PB[15]	PCR[31]	AF0 AF1 AF2 AF3 —	GPIO[31] E0UC[7] — CS4_0 ADC0_X[3]	SIUL eMIOS_0 — DSPI_0 ADC_0	I/O I/O — O I	J	Tristate	67	89	107	L13

Distributor of STMicroelectronics: Excellent Integrated System Limited
Datasheet of SPC560B54L3C6E0Y - IC MCU 32BIT 768KB FLASH 100LQFP
Contact us: sales@integrated-circuit.com Website: www.integrated-circuit.com

Table 6. Functional port pin descriptions (continued)

Port pin	PCR	Alternate function[1]	Function	Peripheral	I/O direction[2]	Pad type	RESET configuration[3]	Pin number			
								LQFP 100	LQFP 144	LQFP 176	LBGA 208[4]
Port C											
PC[0][10]	PCR[32]	AF0 AF1 AF2 AF3	GPIO[32] — TDI —	SIUL — JTAGC —	I/O — I —	M	Input, weak pull-up	87	126	154	A8
PC[1][10]	PCR[33]	AF0 AF1 AF2 AF3	GPIO[33] — TDO —	SIUL — JTAGC —	I/O — O —	F[11]	Tristate	82	121	149	C9
PC[2]	PCR[34]	AF0 AF1 AF2 AF3 —	GPIO[34] SCK_1 CAN4TX DEBUG[0] EIRQ[5]	SIUL DSPI_1 FlexCAN_4 SSCM SIUL	I/O I/O O O I	M	Tristate	78	117	145	A11
PC[3]	PCR[35]	AF0 AF1 AF2 AF3 — — —	GPIO[35] CS0_1 MA[0] DEBUG[1] EIRQ[6] CAN1RX CAN4RX	SIUL DSPI_1 ADC_0 SSCM SIUL FlexCAN_1 FlexCAN_4	I/O I/O O O I I I	S	Tristate	77	116	144	B11

Distributor of STMicroelectronics: Excellent Integrated System Limited
Datasheet of SPC560B54L3C6E0Y - IC MCU 32BIT 768KB FLASH 100LQFP
Contact us: sales@integrated-circuit.com Website: www.integrated-circuit.com

Table 6. Functional port pin descriptions (continued)

Port pin	PCR	Alternate function[1]	Function	Peripheral	I/O direction[2]	Pad type	RESET configuration[3]	Pin number			
								LQFP 100	LQFP 144	LQFP 176	LBGA 208[4]
PC[4]	PCR[36]	AF0 AF1 AF2 AF3 — — —	GPIO[36] E1UC[31] — DEBUG[2] EIRQ[18] SIN_1 CAN3RX	SIUL eMIOS_1 — SSCM SIUL DSPI_1 FlexCAN_3	I/O I/O — O I I I	M	Tristate	92	131	159	B7
PC[5]	PCR[37]	AF0 AF1 AF2 AF3 —	GPIO[37] SOUT_1 CAN3TX DEBUG[3] EIRQ[7]	SIUL DSPI_1 FlexCAN_3 SSCM SIUL	I/O O O O I	M	Tristate	91	130	158	A7
PC[6]	PCR[38]	AF0 AF1 AF2 AF3	GPIO[38] LIN1TX E1UC[28] DEBUG[4]	SIUL LINFlex_1 eMIOS_1 SSCM	I/O O I/O O	S	Tristate	25	36	44	R2
PC[7]	PCR[39]	AF0 AF1 AF2 AF3 — —	GPIO[39] — E1UC[29] DEBUG[5] LIN1RX WKPU[12][5]	SIUL — eMIOS_1 SSCM LINFlex_1 WKPU	I/O — I/O O I I	S	Tristate	26	37	45	P3

Distributor of STMicroelectronics: Excellent Integrated System Limited
Datasheet of SPC560B54L3C6E0Y - IC MCU 32BIT 768KB FLASH 100LQFP
Contact us: sales@integrated-circuit.com Website: www.integrated-circuit.com

Table 6. Functional port pin descriptions (continued)

Port pin	PCR	Alternate function[1]	Function	Peripheral	I/O direction[2]	Pad type	RESET configuration[3]	Pin number			
								LQFP 100	LQFP 144	LQFP 176	LBGA 208[4]
PC[8]	PCR[40]	AF0 AF1 AF2 AF3	GPIO[40] LIN2TX E0UC[3] DEBUG[6]	SIUL LINFlex_2 eMIOS_0 SSCM	I/O O I/O O	S	Tristate	99	143	175	A1
PC[9]	PCR[41]	AF0 AF1 AF2 AF3 — —	GPIO[41] — E0UC[7] DEBUG[7] WKPU[13][5] LIN2RX	SIUL — eMIOS_0 SSCM WKPU LINFlex_2	I/O — I/O O I I	S	Tristate	2	2	2	B1
PC[10]	PCR[42]	AF0 AF1 AF2 AF3	GPIO[42] CAN1TX CAN4TX MA[1]	SIUL FlexCAN_1 FlexCAN_4 ADC_0	I/O O O O	M	Tristate	22	28	36	M3
PC[11]	PCR[43]	AF0 AF1 AF2 AF3 — — —	GPIO[43] — — MA[2] WKPU[5][5] CAN1RX CAN4RX	SIUL — — ADC_0 WKPU FlexCAN_1 FlexCAN_4	I/O — — O I I I	S	Tristate	21	27	35	M4

Distributor of STMicroelectronics: Excellent Integrated System Limited
Datasheet of SPC560B54L3C6E0Y - IC MCU 32BIT 768KB FLASH 100LQFP
Contact us: sales@integrated-circuit.com Website: www.integrated-circuit.com

Table 6. Functional port pin descriptions (continued)

Port pin	PCR	Alternate function[1]	Function	Peripheral	I/O direction[2]	Pad type	RESET configuration[3]	Pin number			
								LQFP 100	LQFP 144	LQFP 176	LBGA 208[4]
PC[12]	PCR[44]	AF0 AF1 AF2 AF3 — —	GPIO[44] E0UC[12] — — EIRQ[19] SIN_2	SIUL eMIOS_0 — — SIUL DSPI_2	I/O I/O — — I I	M	Tristate	97	141	173	B4
PC[13]	PCR[45]	AF0 AF1 AF2 AF3	GPIO[45] E0UC[13] SOUT_2 —	SIUL eMIOS_0 DSPI_2 —	I/O I/O O —	S	Tristate	98	142	174	A2
PC[14]	PCR[46]	AF0 AF1 AF2 AF3 —	GPIO[46] E0UC[14] SCK_2 — EIRQ[8]	SIUL eMIOS_0 DSPI_2 — SIUL	I/O I/O I/O — I	S	Tristate	3	3	3	C1
PC[15]	PCR[47]	AF0 AF1 AF2 AF3 —	GPIO[47] E0UC[15] CS0_2 — EIRQ[20]	SIUL eMIOS_0 DSPI_2 — SIUL	I/O I/O I/O — I	M	Tristate	4	4	4	D3
Port D											

Distributor of STMicroelectronics: Excellent Integrated System Limited
Datasheet of SPC560B54L3C6E0Y - IC MCU 32BIT 768KB FLASH 100LQFP
Contact us: sales@integrated-circuit.com Website: www.integrated-circuit.com

Table 6. Functional port pin descriptions (continued)

Port pin	PCR	Alternate function[1]	Function	Peripheral	I/O direction[2]	Pad type	RESET configuration[3]	Pin number			
								LQFP 100	LQFP 144	LQFP 176	LBGA 208[4]
PD[0]	PCR[48]	AF0 AF1 AF2 AF3 — — —	GPIO[48] — — — WKPU[27][5] ADC0_P[4] ADC1_P[4]	SIUL — — — WKPU ADC_0 ADC_1	I — — — I I I	I	Tristate	41	63	77	P12
PD[1]	PCR[49]	AF0 AF1 AF2 AF3 — — —	GPIO[49] — — — WKPU[28][5] ADC0_P[5] ADC1_P[5]	SIUL — — — WKPU ADC_0 ADC_1	I — — — I I I	I	Tristate	42	64	78	T12
PD[2]	PCR[50]	AF0 AF1 AF2 AF3 — —	GPIO[50] — — — ADC0_P[6] ADC1_P[6]	SIUL — — — ADC_0 ADC_1	I — — — I I	I	Tristate	43	65	79	R12
PD[3]	PCR[51]	AF0 AF1 AF2 AF3 — —	GPIO[51] — — — ADC0_P[7] ADC1_P[7]	SIUL — — — ADC_0 ADC_1	I — — — I I	I	Tristate	44	66	80	P13

Distributor of STMicroelectronics: Excellent Integrated System Limited
Datasheet of SPC560B54L3C6E0Y - IC MCU 32BIT 768KB FLASH 100LQFP
Contact us: sales@integrated-circuit.com Website: www.integrated-circuit.com

Table 6. Functional port pin descriptions (continued)

Port pin	PCR	Alternate function[1]	Function	Peripheral	I/O direction[2]	Pad type	RESET configuration[3]	Pin number			
								LQFP 100	LQFP 144	LQFP 176	LBGA 208[4]
PD[4]	PCR[52]	AF0 AF1 AF2 AF3 — —	GPIO[52] — — — ADC0_P[8] ADC1_P[8]	SIUL — — — ADC_0 ADC_1	I — — — I I	I	Tristate	45	67	81	R13
PD[5]	PCR[53]	AF0 AF1 AF2 AF3 — —	GPIO[53] — — — ADC0_P[9] ADC1_P[9]	SIUL — — — ADC_0 ADC_1	I — — — I I	I	Tristate	46	68	82	T13
PD[6]	PCR[54]	AF0 AF1 AF2 AF3 — —	GPIO[54] — — — ADC0_P[10] ADC1_P[10]	SIUL — — — ADC_0 ADC_1	I — — — I I	I	Tristate	47	69	83	T14
PD[7]	PCR[55]	AF0 AF1 AF2 AF3 — —	GPIO[55] — — — ADC0_P[11] ADC1_P[11]	SIUL — — — ADC_0 ADC_1	I — — — I I	I	Tristate	48	70	84	R14

Distributor of STMicroelectronics: Excellent Integrated System Limited
Datasheet of SPC560B54L3C6E0Y - IC MCU 32BIT 768KB FLASH 100LQFP
Contact us: sales@integrated-circuit.com Website: www.integrated-circuit.com

Table 6. Functional port pin descriptions (continued)

Port pin	PCR	Alternate function[1]	Function	Peripheral	I/O direction[2]	Pad type	RESET configuration[3]	Pin number			
								LQFP 100	LQFP 144	LQFP 176	LBGA 208[4]
PD[8]	PCR[56]	AF0 AF1 AF2 AF3 — —	GPIO[56] — — — ADC0_P[12] ADC1_P[12]	SIUL — — — ADC_0 ADC_1	I — — — I I	I	Tristate	49	71	87	T15
PD[9]	PCR[57]	AF0 AF1 AF2 AF3 — —	GPIO[57] — — — ADC0_P[13] ADC1_P[13]	SIUL — — — ADC_0 ADC_1	I — — — I I	I	Tristate	56	78	94	N15
PD[10]	PCR[58]	AF0 AF1 AF2 AF3 — —	GPIO[58] — — — ADC0_P[14] ADC1_P[14]	SIUL — — — ADC_0 ADC_1	I — — — I I	I	Tristate	57	79	95	N14
PD[11]	PCR[59]	AF0 AF1 AF2 AF3 — —	GPIO[59] — — — ADC0_P[15] ADC1_P[15]	SIUL — — — ADC_0 ADC_1	I — — — I I	I	Tristate	58	80	96	N16

Distributor of STMicroelectronics: Excellent Integrated System Limited
Datasheet of SPC560B54L3C6E0Y - IC MCU 32BIT 768KB FLASH 100LQFP
Contact us: sales@integrated-circuit.com Website: www.integrated-circuit.com

Table 6. Functional port pin descriptions (continued)

Port pin	PCR	Alternate function[1]	Function	Peripheral	I/O direction[2]	Pad type	RESET configuration[3]	Pin number			
								LQFP 100	LQFP 144	LQFP 176	LBGA 208[4]
PD[12]	PCR[60]	AF0 AF1 AF2 AF3 —	GPIO[60] CS5_0 E0UC[24] — ADC0_S[4]	SIUL DSPI_0 eMIOS_0 — ADC_0	I/O O I/O — I	J	Tristate	—	—	100	M15
PD[13]	PCR[61]	AF0 AF1 AF2 AF3 —	GPIO[61] CS0_1 E0UC[25] — ADC0_S[5]	SIUL DSPI_1 eMIOS_0 — ADC_0	I/O I/O I/O — I	J	Tristate	62	84	102	M14
PD[14]	PCR[62]	AF0 AF1 AF2 AF3 —	GPIO[62] CS1_1 E0UC[26] — ADC0_S[6]	SIUL DSPI_1 eMIOS_0 — ADC_0	I/O O I/O — I	J	Tristate	64	86	104	L15
PD[15]	PCR[63]	AF0 AF1 AF2 AF3 —	GPIO[63] CS2_1 E0UC[27] — ADC0_S[7]	SIUL DSPI_1 eMIOS_0 — ADC_0	I/O O I/O — I	J	Tristate	66	88	106	L14
Port E											

Distributor of STMicroelectronics: Excellent Integrated System Limited
Datasheet of SPC560B54L3C6E0Y - IC MCU 32BIT 768KB FLASH 100LQFP
Contact us: sales@integrated-circuit.com Website: www.integrated-circuit.com

Table 6. Functional port pin descriptions (continued)

Port pin	PCR	Alternate function[1]	Function	Peripheral	I/O direction[2]	Pad type	RESET configuration[3]	Pin number			
								LQFP 100	LQFP 144	LQFP 176	LBGA 208[4]
PE[0]	PCR[64]	AF0 AF1 AF2 AF3 — —	GPIO[64] E0UC[16] — — WKPU[6][5] CAN5RX	SIUL eMIOS_0 — — WKPU FlexCAN_5	I/O I/O — — I I	S	Tristate	6	10	18	F1
PE[1]	PCR[65]	AF0 AF1 AF2 AF3	GPIO[65] E0UC[17] CAN5TX —	SIUL eMIOS_0 FlexCAN_5 —	I/O I/O O —	M	Tristate	8	12	20	F4
PE[2]	PCR[66]	AF0 AF1 AF2 AF3 — —	GPIO[66] E0UC[18] — — EIRQ[21] SIN_1	SIUL eMIOS_0 — — SIUL DSPI_1	I/O I/O — — I I	M	Tristate	89	128	156	D7
PE[3]	PCR[67]	AF0 AF1 AF2 AF3	GPIO[67] E0UC[19] SOUT_1 —	SIUL eMIOS_0 DSPI_1 —	I/O I/O O —	M	Tristate	90	129	157	C7
PE[4]	PCR[68]	AF0 AF1 AF2 AF3 —	GPIO[68] E0UC[20] SCK_1 — EIRQ[9]	SIUL eMIOS_0 DSPI_1 — SIUL	I/O I/O I/O — I	M	Tristate	93	132	160	D6

Distributor of STMicroelectronics: Excellent Integrated System Limited
Datasheet of SPC560B54L3C6E0Y - IC MCU 32BIT 768KB FLASH 100LQFP
Contact us: sales@integrated-circuit.com Website: www.integrated-circuit.com

Table 6. Functional port pin descriptions (continued)

Port pin	PCR	Alternate function[1]	Function	Peripheral	I/O direction[2]	Pad type	RESET configuration[3]	Pin number			
								LQFP 100	LQFP 144	LQFP 176	LBGA 208[4]
PE[5]	PCR[69]	AF0 AF1 AF2 AF3	GPIO[69] E0UC[21] CS0_1 MA[2]	SIUL eMIOS_0 DSPI_1 ADC_0	I/O I/O I/O O	M	Tristate	94	133	161	C6
PE[6]	PCR[70]	AF0 AF1 AF2 AF3 —	GPIO[70] E0UC[22] CS3_0 MA[1] EIRQ[22]	SIUL eMIOS_0 DSPI_0 ADC_0 SIUL	I/O I/O O O I	M	Tristate	95	139	167	B5
PE[7]	PCR[71]	AF0 AF1 AF2 AF3 —	GPIO[71] E0UC[23] CS2_0 MA[0] EIRQ[23]	SIUL eMIOS_0 DSPI_0 ADC_0 SIUL	I/O I/O O O I	M	Tristate	96	140	168	C4
PE[8]	PCR[72]	AF0 AF1 AF2 AF3	GPIO[72] CAN2TX E0UC[22] CAN3TX	SIUL FlexCAN_2 eMIOS_0 FlexCAN_3	I/O O I/O O	M	Tristate	9	13	21	G2
PE[9]	PCR[73]	AF0 AF1 AF2 AF3 — — —	GPIO[73] — E0UC[23] — WKPU[7][5] CAN2RX CAN3RX	SIUL — eMIOS_0 — WKPU FlexCAN_2 FlexCAN_3	I/O — I/O — I I I	S	Tristate	10	14	22	G1

Distributor of STMicroelectronics: Excellent Integrated System Limited
Datasheet of SPC560B54L3C6E0Y - IC MCU 32BIT 768KB FLASH 100LQFP
Contact us: sales@integrated-circuit.com Website: www.integrated-circuit.com

Table 6. Functional port pin descriptions (continued)

Port pin	PCR	Alternate function[1]	Function	Peripheral	I/O direction[2]	Pad type	RESET configuration[3]	Pin number			
								LQFP 100	LQFP 144	LQFP 176	LBGA 208[4]
PE[10]	PCR[74]	AF0 AF1 AF2 AF3 —	GPIO[74] LIN3TX CS3_1 E1UC[30] EIRQ[10]	SIUL LINFlex_3 DSPI_1 eMIOS_1 SIUL	I/O O O I/O I	S	Tristate	11	15	23	G3
PE[11]	PCR[75]	AF0 AF1 AF2 AF3 — —	GPIO[75] E0UC[24] CS4_1 — LIN3RX WKPU[14][5]	SIUL eMIOS_0 DSPI_1 — LINFlex_3 WKPU	I/O I/O O — I I	S	Tristate	13	17	25	H2
PE[12]	PCR[76]	AF0 AF1 AF2 AF3 — — —	GPIO[76] — E1UC[19][12] — EIRQ[11] SIN_2 ADC1_S[7]	SIUL — eMIOS_1 — SIUL DSPI_2 ADC_1	I/O — I/O — I I I	J	Tristate	76	109	133	C14
PE[13]	PCR[77]	AF0 AF1 AF2 AF3	GPIO[77] SOUT_2 E1UC[20] —	SIUL DSPI_2 eMIOS_1 —	I/O O I/O —	S	Tristate	—	103	127	D15

Distributor of STMicroelectronics: Excellent Integrated System Limited
Datasheet of SPC560B54L3C6E0Y - IC MCU 32BIT 768KB FLASH 100LQFP
Contact us: sales@integrated-circuit.com Website: www.integrated-circuit.com

Table 6. Functional port pin descriptions (continued)

Port pin	PCR	Alternate function[1]	Function	Peripheral	I/O direction[2]	Pad type	RESET configuration[3]	Pin number			
								LQFP 100	LQFP 144	LQFP 176	LBGA 208[4]
PE[14]	PCR[78]	AF0 AF1 AF2 AF3 —	GPIO[78] SCK_2 E1UC[21] — EIRQ[12]	SIUL DSPI_2 eMIOS_1 — SIUL	I/O I/O I/O — I	S	Tristate	—	112	136	C13
PE[15]	PCR[79]	AF0 AF1 AF2 AF3	GPIO[79] CS0_2 E1UC[22] —	SIUL DSPI_2 eMIOS_1 —	I/O I/O I/O —	M	Tristate	—	113	137	A13
Port F											
PF[0]	PCR[80]	AF0 AF1 AF2 AF3 —	GPIO[80] E0UC[10] CS3_1 — ADC0_S[8]	SIUL eMIOS_0 DSPI_1 — ADC_0	I/O I/O O — I	J	Tristate	—	55	63	N10
PF[1]	PCR[81]	AF0 AF1 AF2 AF3 —	GPIO[81] E0UC[11] CS4_1 — ADC0_S[9]	SIUL eMIOS_0 DSPI_1 — ADC_0	I/O I/O O — I	J	Tristate	—	56	64	P10
PF[2]	PCR[82]	AF0 AF1 AF2 AF3 —	GPIO[82] E0UC[12] CS0_2 — ADC0_S[10]	SIUL eMIOS_0 DSPI_2 — ADC_0	I/O I/O I/O — I	J	Tristate	—	57	65	T10

Distributor of STMicroelectronics: Excellent Integrated System Limited
Datasheet of SPC560B54L3C6E0Y - IC MCU 32BIT 768KB FLASH 100LQFP
Contact us: sales@integrated-circuit.com Website: www.integrated-circuit.com

Table 6. Functional port pin descriptions (continued)

Port pin	PCR	Alternate function[1]	Function	Peripheral	I/O direction[2]	Pad type	RESET configuration[3]	Pin number			
								LQFP 100	LQFP 144	LQFP 176	LBGA 208[4]
PF[3]	PCR[83]	AF0 AF1 AF2 AF3 —	GPIO[83] E0UC[13] CS1_2 — ADC0_S[11]	SIUL eMIOS_0 DSPI_2 — ADC_0	I/O I/O O — I	J	Tristate	—	58	66	R10
PF[4]	PCR[84]	AF0 AF1 AF2 AF3 —	GPIO[84] E0UC[14] CS2_2 — ADC0_S[12]	SIUL eMIOS_0 DSPI_2 — ADC_0	I/O I/O O — I	J	Tristate	—	59	67	N11
PF[5]	PCR[85]	AF0 AF1 AF2 AF3 —	GPIO[85] E0UC[22] CS3_2 — ADC0_S[13]	SIUL eMIOS_0 DSPI_2 — ADC_0	I/O I/O O — I	J	Tristate	—	60	68	P11
PF[6]	PCR[86]	AF0 AF1 AF2 AF3 —	GPIO[86] E0UC[23] CS1_1 — ADC0_S[14]	SIUL eMIOS_0 DSPI_1 — ADC_0	I/O I/O O — I	J	Tristate	—	61	69	T11
PF[7]	PCR[87]	AF0 AF1 AF2 AF3 —	GPIO[87] — CS2_1 — ADC0_S[15]	SIUL — DSPI_1 — ADC_0	I/O — O — I	J	Tristate	—	62	70	R11

Distributor of STMicroelectronics: Excellent Integrated System Limited
Datasheet of SPC560B54L3C6E0Y - IC MCU 32BIT 768KB FLASH 100LQFP
Contact us: sales@integrated-circuit.com Website: www.integrated-circuit.com

Table 6. Functional port pin descriptions (continued)

Port pin	PCR	Alternate function[1]	Function	Peripheral	I/O direction[2]	Pad type	RESET configuration[3]	Pin number			
								LQFP 100	LQFP 144	LQFP 176	LBGA 208[4]
PF[8]	PCR[88]	AF0 AF1 AF2 AF3	GPIO[88] CAN3TX CS4_0 CAN2TX	SIUL FlexCAN_3 DSPI_0 FlexCAN_2	I/O O O O	M	Tristate	—	34	42	P1
PF[9]	PCR[89]	AF0 AF1 AF2 AF3 — — —	GPIO[89] E1UC[1] CS5_0 — WKPU[22][5] CAN2RX CAN3RX	SIUL eMIOS_1 DSPI_0 — WKPU FlexCAN_2 FlexCAN_3	I/O I/O O — I I I	S	Tristate	—	33	41	N2
PF[10]	PCR[90]	AF0 AF1 AF2 AF3	GPIO[90] CS1_0 LIN4TX E1UC[2]	SIUL DSPI_0 LINFlex_4 eMIOS_1	I/O O O I/O	M	Tristate	—	38	46	R3
PF[11]	PCR[91]	AF0 AF1 AF2 AF3 — —	GPIO[91] CS2_0 E1UC[3] — WKPU[15][5] LIN4RX	SIUL DSPI_0 eMIOS_1 — WKPU LINFlex_4	I/O O I/O — I I	S	Tristate	—	39	47	R4
PF[12]	PCR[92]	AF0 AF1 AF2 AF3	GPIO[92] E1UC[25] LIN5TX —	SIUL eMIOS_1 LINFlex_5 —	I/O I/O O —	M	Tristate	—	35	43	R1

Distributor of STMicroelectronics: Excellent Integrated System Limited
Datasheet of SPC560B54L3C6E0Y - IC MCU 32BIT 768KB FLASH 100LQFP
Contact us: sales@integrated-circuit.com Website: www.integrated-circuit.com

Table 6. Functional port pin descriptions (continued)

Port pin	PCR	Alternate function[1]	Function	Peripheral	I/O direction[2]	Pad type	RESET configuration[3]	Pin number			
								LQFP 100	LQFP 144	LQFP 176	LBGA 208[4]
PF[13]	PCR[93]	AF0 AF1 AF2 AF3 — —	GPIO[93] E1UC[26] — — WKPU[16][5] LIN5RX	SIUL eMIOS_1 — — WKPU LINFlex_5	I/O I/O — — I I	S	Tristate	—	41	49	T6
PF[14]	PCR[94]	AF0 AF1 AF2 AF3	GPIO[94] CAN4TX E1UC[27] CAN1TX	SIUL FlexCAN_4 eMIOS_1 FlexCAN_1	I/O O I/O O	M	Tristate	—	102	126	D14
PF[15]	PCR[95]	AF0 AF1 AF2 AF3 — — —	GPIO[95] E1UC[4] — — EIRQ[13] CAN1RX CAN4RX	SIUL eMIOS_1 — — SIUL FlexCAN_1 FlexCAN_4	I/O I/O — — I I I	S	Tristate	—	101	125	E15
Port G											
PG[0]	PCR[96]	AF0 AF1 AF2 AF3	GPIO[96] CAN5TX E1UC[23] —	SIUL FlexCAN_5 eMIOS_1 —	I/O O I/O —	M	Tristate	—	98	122	E14

Distributor of STMicroelectronics: Excellent Integrated System Limited
Datasheet of SPC560B54L3C6E0Y - IC MCU 32BIT 768KB FLASH 100LQFP
Contact us: sales@integrated-circuit.com Website: www.integrated-circuit.com

Table 6. Functional port pin descriptions (continued)

Port pin	PCR	Alternate function[1]	Function	Peripheral	I/O direction[2]	Pad type	RESET configuration[3]	Pin number			
								LQFP 100	LQFP 144	LQFP 176	LBGA 208[4]
PG[1]	PCR[97]	AF0 AF1 AF2 AF3 — —	GPIO[97] — E1UC[24] — EIRQ[14] CAN5RX	SIUL — eMIOS_1 — SIUL FlexCAN_5	I/O — I/O — I I	S	Tristate	—	97	121	E13
PG[2]	PCR[98]	AF0 AF1 AF2 AF3	GPIO[98] E1UC[11] SOUT_3 —	SIUL eMIOS_1 DSPI_3 —	I/O I/O O —	M	Tristate	—	8	16	E4
PG[3]	PCR[99]	AF0 AF1 AF2 AF3 —	GPIO[99] E1UC[12] CS0_3 — WKPU[17][5]	SIUL eMIOS_1 DSPI_3 — WKPU	I/O I/O I/O — I	S	Tristate	—	7	15	E3
PG[4]	PCR[100]	AF0 AF1 AF2 AF3	GPIO[100] E1UC[13] SCK_3 —	SIUL eMIOS_1 DSPI_3 —	I/O I/O I/O —	M	Tristate	—	6	14	E1
PG[5]	PCR[101]	AF0 AF1 AF2 AF3 — —	GPIO[101] E1UC[14] — — WKPU[18][5] SIN_3	SIUL eMIOS_1 — — WKPU DSPI_3	I/O I/O — — I I	S	Tristate	—	5	13	E2

Distributor of STMicroelectronics: Excellent Integrated System Limited
Datasheet of SPC560B54L3C6E0Y - IC MCU 32BIT 768KB FLASH 100LQFP
Contact us: sales@integrated-circuit.com Website: www.integrated-circuit.com

Table 6. Functional port pin descriptions (continued)

Port pin	PCR	Alternate function[1]	Function	Peripheral	I/O direction[2]	Pad type	RESET configuration[3]	Pin number			
								LQFP 100	LQFP 144	LQFP 176	LBGA 208[4]
PG[6]	PCR[102]	AF0 AF1 AF2 AF3	GPIO[102] E1UC[15] LIN6TX —	SIUL eMIOS_1 LINFlex_6 —	I/O I/O O —	M	Tristate	—	30	38	M2
PG[7]	PCR[103]	AF0 AF1 AF2 AF3 — —	GPIO[103] E1UC[16] E1UC[30] — WKPU[20][5] LIN6RX	SIUL eMIOS_1 eMIOS_1 — WKPU LINFlex_6	I/O I/O I/O — I I	S	Tristate	—	29	37	M1
PG[8]	PCR[104]	AF0 AF1 AF2 AF3 —	GPIO[104] E1UC[17] LIN7TX CS0_2 EIRQ[15]	SIUL eMIOS_1 LINFlex_7 DSPI_2 SIUL	I/O I/O O I/O I	S	Tristate	—	26	34	L2
PG[9]	PCR[105]	AF0 AF1 AF2 AF3 — —	GPIO[105] E1UC[18] — SCK_2 WKPU[21][5] LIN7RX	SIUL eMIOS_1 — DSPI_2 WKPU LINFlex_7	I/O I/O — I/O I I	S	Tristate	—	25	33	L1

Distributor of STMicroelectronics: Excellent Integrated System Limited
Datasheet of SPC560B54L3C6E0Y - IC MCU 32BIT 768KB FLASH 100LQFP
Contact us: sales@integrated-circuit.com Website: www.integrated-circuit.com

Table 6. Functional port pin descriptions (continued)

Port pin	PCR	Alternate function[1]	Function	Peripheral	I/O direction[2]	Pad type	RESET configuration[3]	Pin number			
								LQFP 100	LQFP 144	LQFP 176	LBGA 208[4]
PG[10]	PCR[106]	AF0 AF1 AF2 AF3 —	GPIO[106] E0UC[24] E1UC[31] — SIN_4	SIUL eMIOS_0 eMIOS_1 — DSPI_4	I/O I/O I/O — I	S	Tristate	—	114	138	D13
PG[11]	PCR[107]	AF0 AF1 AF2 AF3	GPIO[107] E0UC[25] CS0_4 —	SIUL eMIOS_0 DSPI_4 —	I/O I/O I/O —	M	Tristate	—	115	139	B12
PG[12]	PCR[108]	AF0 AF1 AF2 AF3	GPIO[108] E0UC[26] SOUT_4 —	SIUL eMIOS_0 DSPI_4 —	I/O I/O O —	M	Tristate	—	92	116	K14
PG[13]	PCR[109]	AF0 AF1 AF2 AF3	GPIO[109] E0UC[27] SCK_4 —	SIUL eMIOS_0 DSPI_4 —	I/O I/O I/O —	M	Tristate	—	91	115	K16
PG[14]	PCR[110]	AF0 AF1 AF2 AF3	GPIO[110] E1UC[0] LIN8TX —	SIUL eMIOS_1 LINFlex_8 —	I/O I/O O —	S	Tristate	—	110	134	B14

Distributor of STMicroelectronics: Excellent Integrated System Limited
Datasheet of SPC560B54L3C6E0Y - IC MCU 32BIT 768KB FLASH 100LQFP
Contact us: sales@integrated-circuit.com Website: www.integrated-circuit.com

Table 6. Functional port pin descriptions (continued)

Port pin	PCR	Alternate function[1]	Function	Peripheral	I/O direction[2]	Pad type	RESET configuration[3]	Pin number			
								LQFP 100	LQFP 144	LQFP 176	LBGA 208[4]
PG[15]	PCR[111]	AF0 AF1 AF2 AF3 —	GPIO[111] E1UC[1] — — LIN8RX	SIUL eMIOS_1 — — LINFlex_8	I/O I/O — — I	M	Tristate	—	111	135	B13
Port H											
PH[0]	PCR[112]	AF0 AF1 AF2 AF3 —	GPIO[112] E1UC[2] — — SIN_1	SIUL eMIOS_1 — — DSPI_1	I/O I/O — — I	M	Tristate	—	93	117	F13
PH[1]	PCR[113]	AF0 AF1 AF2 AF3	GPIO[113] E1UC[3] SOUT_1 —	SIUL eMIOS_1 DSPI_1 —	I/O I/O O —	M	Tristate	—	94	118	F14
PH[2]	PCR[114]	AF0 AF1 AF2 AF3	GPIO[114] E1UC[4] SCK_1 —	SIUL eMIOS_1 DSPI_1 —	I/O I/O I/O —	M	Tristate	—	95	119	F16
PH[3]	PCR[115]	AF0 AF1 AF2 AF3	GPIO[115] E1UC[5] CS0_1 —	SIUL eMIOS_1 DSPI_1 —	I/O I/O I/O —	M	Tristate	—	96	120	F15

Distributor of STMicroelectronics: Excellent Integrated System Limited
Datasheet of SPC560B54L3C6E0Y - IC MCU 32BIT 768KB FLASH 100LQFP
Contact us: sales@integrated-circuit.com Website: www.integrated-circuit.com

Table 6. Functional port pin descriptions (continued)

Port pin	PCR	Alternate function[1]	Function	Peripheral	I/O direction[2]	Pad type	RESET configuration[3]	Pin number			
								LQFP 100	LQFP 144	LQFP 176	LBGA 208[4]
PH[4]	PCR[116]	AF0 AF1 AF2 AF3	GPIO[116] E1UC[6] — —	SIUL eMIOS_1 — —	I/O I/O — —	M	Tristate	—	134	162	A6
PH[5]	PCR[117]	AF0 AF1 AF2 AF3	GPIO[117] E1UC[7] — —	SIUL eMIOS_1 — —	I/O I/O — —	S	Tristate	—	135	163	B6
PH[6]	PCR[118]	AF0 AF1 AF2 AF3	GPIO[118] E1UC[8] — MA[2]	SIUL eMIOS_1 — ADC_0	I/O I/O — O	M	Tristate	—	136	164	D5
PH[7]	PCR[119]	AF0 AF1 AF2 AF3	GPIO[119] E1UC[9] CS3_2 MA[1]	SIUL eMIOS_1 DSPI_2 ADC_0	I/O I/O O O	M	Tristate	—	137	165	C5
PH[8]	PCR[120]	AF0 AF1 AF2 AF3	GPIO[120] E1UC[10] CS2_2 MA[0]	SIUL eMIOS_1 DSPI_2 ADC_0	I/O I/O O O	M	Tristate	—	138	166	A5
PH[9][10]	PCR[121]	AF0 AF1 AF2 AF3	GPIO[121] — TCK —	SIUL — JTAGC —	I/O — I —	S	Input, weak pull-up	88	127	155	B8

Distributor of STMicroelectronics: Excellent Integrated System Limited
Datasheet of SPC560B54L3C6E0Y - IC MCU 32BIT 768KB FLASH 100LQFP
Contact us: sales@integrated-circuit.com Website: www.integrated-circuit.com

Table 6. Functional port pin descriptions (continued)

Port pin	PCR	Alternate function[1]	Function	Peripheral	I/O direction[2]	Pad type	RESET configuration[3]	Pin number			
								LQFP 100	LQFP 144	LQFP 176	LBGA 208[4]
PH[10][10]	PCR[122]	AF0 AF1 AF2 AF3	GPIO[122] — TMS —	SIUL — JTAGC —	I/O — I —	M	Input, weak pull-up	81	120	148	B9
PH[11]	PCR[123]	AF0 AF1 AF2 AF3	GPIO[123] SOUT_3 CS0_4 E1UC[5]	SIUL DSPI_3 DSPI_4 eMIOS_1	I/O O I/O I/O	M	Tristate	—	—	140	A14
PH[12]	PCR[124]	AF0 AF1 AF2 AF3	GPIO[124] SCK_3 CS1_4 E1UC[25]	SIUL DSPI_3 DSPI_4 eMIOS_1	I/O I/O O I/O	M	Tristate	—	—	141	D12
PH[13]	PCR[125]	AF0 AF1 AF2 AF3	GPIO[125] SOUT_4 CS0_3 E1UC[26]	SIUL DSPI_4 DSPI_3 eMIOS_1	I/O O I/O I/O	M	Tristate	—	—	9	B3
PH[14]	PCR[126]	AF0 AF1 AF2 AF3	GPIO[126] SCK_4 CS1_3 E1UC[27]	SIUL DSPI_4 DSPI_3 eMIOS_1	I/O I/O O I/O	M	Tristate	—	—	10	D1
PH[15]	PCR[127]	AF0 AF1 AF2 AF3	GPIO[127] SOUT_5 — E1UC[17]	SIUL DSPI_5 — eMIOS_1	I/O O — I/O	M	Tristate	—	—	8	A3
Port I											

Distributor of STMicroelectronics: Excellent Integrated System Limited
Datasheet of SPC560B54L3C6E0Y - IC MCU 32BIT 768KB FLASH 100LQFP
Contact us: sales@integrated-circuit.com Website: www.integrated-circuit.com

Table 6. Functional port pin descriptions (continued)

Port pin	PCR	Alternate function[1]	Function	Peripheral	I/O direction[2]	Pad type	RESET configuration[3]	Pin number			
								LQFP 100	LQFP 144	LQFP 176	LBGA 208[4]
PI[0]	PCR[128]	AF0 AF1 AF2 AF3	GPIO[128] E0UC[28] LIN8TX —	SIUL eMIOS_0 LINFlex_8 —	I/O I/O O —	S	Tristate	—	—	172	A9
PI[1]	PCR[129]	AF0 AF1 AF2 AF3 — —	GPIO[129] E0UC[29] — — WKPU[24][5] LIN8RX	SIUL eMIOS_0 — — WKPU LINFlex_8	I/O I/O — — I I	S	Tristate	—	—	171	A10
PI[2]	PCR[130]	AF0 AF1 AF2 AF3	GPIO[130] E0UC[30] LIN9TX —	SIUL eMIOS_0 LINFlex_9 —	I/O I/O O —	S	Tristate	—	—	170	B10
PI[3]	PCR[131]	AF0 AF1 AF2 AF3 — —	GPIO[131] E0UC[31] — — WKPU[23][5] LIN9RX	SIUL eMIOS_0 — — WKPU LINFlex_9	I/O I/O — — I I	S	Tristate	—	—	169	C10
PI[4]	PCR[132]	AF0 AF1 AF2 AF3	GPIO[132] E1UC[28] SOUT_4 —	SIUL eMIOS_1 DSPI_4 —	I/O I/O O —	S	Tristate	—	—	143	A12

Distributor of STMicroelectronics: Excellent Integrated System Limited
Datasheet of SPC560B54L3C6E0Y - IC MCU 32BIT 768KB FLASH 100LQFP
Contact us: sales@integrated-circuit.com Website: www.integrated-circuit.com

Table 6. Functional port pin descriptions (continued)

Port pin	PCR	Alternate function[1]	Function	Peripheral	I/O direction[2]	Pad type	RESET configuration[3]	Pin number			
								LQFP 100	LQFP 144	LQFP 176	LBGA 208[4]
PI[5]	PCR[133]	AF0 AF1 AF2 AF3	GPIO[133] E1UC[29] SCK_4 —	SIUL eMIOS_1 DSPI_4 —	I/O I/O I/O —	S	Tristate	—	—	142	C12
PI[6]	PCR[134]	AF0 AF1 AF2 AF3	GPIO[134] E1UC[30] CS0_4 —	SIUL eMIOS_1 DSPI_4 —	I/O I/O I/O —	S	Tristate	—	—	11	D2
PI[7]	PCR[135]	AF0 AF1 AF2 AF3	GPIO[135] E1UC[31] CS1_4 —	SIUL eMIOS_1 DSPI_4 —	I/O I/O O —	S	Tristate	—	—	12	D3
PI[8]	PCR[136]	AF0 AF1 AF2 AF3 —	GPIO[136] — — — ADC0_S[16]	SIUL — — — ADC_0	I/O — — — I	J	Tristate	—	—	108	J13
PI[9]	PCR[137]	AF0 AF1 AF2 AF3 —	GPIO[137] — — — ADC0_S[17]	SIUL — — — ADC_0	I/O — — — I	J	Tristate	—	—	109	J14

Distributor of STMicroelectronics: Excellent Integrated System Limited
Datasheet of SPC560B54L3C6E0Y - IC MCU 32BIT 768KB FLASH 100LQFP
Contact us: sales@integrated-circuit.com Website: www.integrated-circuit.com

Table 6. Functional port pin descriptions (continued)

Port pin	PCR	Alternate function[1]	Function	Peripheral	I/O direction[2]	Pad type	RESET configuration[3]	Pin number			
								LQFP 100	LQFP 144	LQFP 176	LBGA 208[4]
PI[10]	PCR[138]	AF0 AF1 AF2 AF3 —	GPIO[138] — — — ADC0_S[18]	SIUL — — — ADC_0	I/O — — — I	J	Tristate	—	—	110	J15
PI[11]	PCR[139]	AF0 AF1 AF2 AF3 — —	GPIO[139] — — — ADC0_S[19] SIN_3	SIUL — — — ADC_0 DSPI_3	I/O — — — I I	J	Tristate	—	—	111	J16
PI[12]	PCR[140]	AF0 AF1 AF2 AF3 —	GPIO[140] CS0_3 — — ADC0_S[20]	SIUL DSPI_3 — — ADC_0	I/O I/O — — I	J	Tristate	—	—	112	G14
PI[13]	PCR[141]	AF0 AF1 AF2 AF3 —	GPIO[141] CS1_3 — — ADC0_S[21]	SIUL DSPI_3 — — ADC_0	I/O O — — I	J	Tristate	—	—	113	G15

Distributor of STMicroelectronics: Excellent Integrated System Limited
Datasheet of SPC560B54L3C6E0Y - IC MCU 32BIT 768KB FLASH 100LQFP
Contact us: sales@integrated-circuit.com Website: www.integrated-circuit.com

Table 6. Functional port pin descriptions (continued)

Port pin	PCR	Alternate function[1]	Function	Peripheral	I/O direction[2]	Pad type	RESET configuration[3]	Pin number			
								LQFP 100	LQFP 144	LQFP 176	LBGA 208[4]
PI[14]	PCR[142]	AF0 AF1 AF2 AF3 — —	GPIO[142] — — — ADC0_S[22] SIN_4	SIUL — — — ADC_0 DSPI_4	I/O — — — I I	J	Tristate	—	—	76	R8
PI[15]	PCR[143]	AF0 AF1 AF2 AF3 —	GPIO[143] CS0_4 — — ADC0_S[23]	SIUL DSPI_4 — — ADC_0	I/O I/O — — I	J	Tristate	—	—	75	T8
Port J											
PJ[0]	PCR[144]	AF0 AF1 AF2 AF3 —	GPIO[144] CS1_4 — — ADC0_S[24]	SIUL DSPI_4 — — ADC_0	I/O O — — I	J	Tristate	—	—	74	N5
PJ[1]	PCR[145]	AF0 AF1 AF2 AF3 — —	GPIO[145] — — — ADC0_S[25] SIN_5	SIUL — — — ADC_0 DSPI_5	I/O — — — I I	J	Tristate	—	—	73	P5

Distributor of STMicroelectronics: Excellent Integrated System Limited
Datasheet of SPC560B54L3C6E0Y - IC MCU 32BIT 768KB FLASH 100LQFP
Contact us: sales@integrated-circuit.com Website: www.integrated-circuit.com

Table 6. Functional port pin descriptions (continued)

Port pin	PCR	Alternate function[1]	Function	Peripheral	I/O direction[2]	Pad type	RESET configuration[3]	Pin number			
								LQFP 100	LQFP 144	LQFP 176	LBGA 208[4]
PJ[2]	PCR[146]	AF0 AF1 AF2 AF3 —	GPIO[146] CS0_5 — — ADC0_S[26]	SIUL DSPI_5 — — ADC_0	I/O I/O — — I	J	Tristate	—	—	72	P4
PJ[3]	PCR[147]	AF0 AF1 AF2 AF3 —	GPIO[147] CS1_5 — — ADC0_S[27]	SIUL DSPI_5 — — ADC_0	I/O O — — I	J	Tristate	—	—	71	P2
PJ[4]	PCR[148]	AF0 AF1 AF2 AF3	GPIO[148] SCK_5 E1UC[18] —	SIUL DSPI_5 eMIOS_1 —	I/O I/O I/O —	M	Tristate	—	—	5	A4

1. Alternate functions are chosen by setting the values of the PCR.PA bitfields inside the SIUL module. PCR.PA = 00 → AF0; PCR.PA = 01 → AF1; PCR.PA = 10 → AF2; PCR.PA = 11 → AF2. This is intended to select the output functions; to use one of the input functions, the PCR.IBE bit must be written to '1', regardless of the values selected in the PCR.PA bitfields. For this reason, the value corresponding to an input only function is reported as "—".
2. Multiple inputs are routed to all respective modules internally. The input of some modules must be configured by setting the values of the PSMIO.PADSELx bitfields inside the SIUL module.
3. The RESET configuration applies during and after reset.
4. LBGA208 available only as development package for Nexus2+
5. All WKPU pins also support external interrupt capability. See the WKPU chapter for further details.
6. NMI has higher priority than alternate function. When NMI is selected, the PCR.AF field is ignored.
7. "Not applicable" because these functions are available only while the device is booting. Refer to the BAM information for details.
8. Value of PCR.IBE bit must be 0.
9. This wakeup input cannot be used to exit STANDBY mode.

Distributor of STMicroelectronics: Excellent Integrated System Limited
Datasheet of SPC560B54L3C6E0Y - IC MCU 32BIT 768KB FLASH 100LQFP
Contact us: sales@integrated-circuit.com Website: www.integrated-circuit.com

10. Out of reset all the functional pins except PC[0:1] and PH[9:10] are available to the user as GPIO.
    PC[0:1] are available as JTAG pins (TDI and TDO respectively).
    PH[9:10] are available as JTAG pins (TCK and TMS respectively).
    It is up to the user to configure these pins as GPIO when needed.
11. PC[1] is a fast/medium pad but is in medium configuration by default. This pad is in Alternate Function 2 mode after reset which has TDO functionality. The reset value of PCR.OBE is '1', but this setting has no impact as long as this pad stays in AF2 mode. After configuring this pad as GPIO (PCR.PA = 0), output buffer is enabled as reset value of PCR.OBE = 1.
12. Not available in LQFP100 package.

Distributor of STMicroelectronics: Excellent Integrated System Limited
Datasheet of SPC560B54L3C6E0Y - IC MCU 32BIT 768KB FLASH 100LQFP
Contact us: sales@integrated-circuit.com Website: www.integrated-circuit.com

3.8 Nexus 2+ pins

In the LBGA208 package, eight additional debug pins are available (see *Table 7*).

Table 7. Nexus 2+ pin descriptions

Port pin	Function	I/O direction	Pad type	Function after reset	Pin number		
					LQFP 100	LQFP 144	LBGA 208(1)
MCKO	Message clock out	O	F	—	—	—	T4
MDO0	Message data out 0	O	M	—	—	—	H15
MDO1	Message data out 1	O	M	—	—	—	H16
MDO2	Message data out 2	O	M	—	—	—	H14
MDO3	Message data out 3	O	M	—	—	—	H13
EVTI	Event in	I	M	Pull-up	—	—	K1
EVTO	Event out	O	M	—	—	—	L4
MSEO	Message start/end out	O	M	—	—	—	G16

1. LBGA208 available only as development package for Nexus2+.

Distributor of STMicroelectronics: Excellent Integrated System Limited
Datasheet of SPC560B54L3C6E0Y - IC MCU 32BIT 768KB FLASH 100LQFP
Contact us: sales@integrated-circuit.com Website: www.integrated-circuit.com

4 Electrical characteristics

This section contains electrical characteristics of the device as well as temperature and power considerations.

This product contains devices to protect the inputs against damage due to high static voltages. However, it is advisable to take precautions to avoid application of any voltage higher than the specified maximum rated voltages.

To enhance reliability, unused inputs can be driven to an appropriate logic voltage level (V_{DD} or V_{SS}). This could be done by the internal pull-up and pull-down, which is provided by the product for most general purpose pins.

The parameters listed in the following tables represent the characteristics of the device and its demands on the system.

In the tables where the device logic provides signals with their respective timing characteristics, the symbol “CC” for Controller Characteristics is included in the Symbol column.

In the tables where the external system must provide signals with their respective timing characteristics to the device, the symbol “SR” for System Requirement is included in the Symbol column.

4.1 Parameter classification

The electrical parameters shown in this supplement are guaranteed by various methods. To give the customer a better understanding, the classifications listed in *Table 8* are used and the parameters are tagged accordingly in the tables where appropriate.

Table 8. Parameter classifications

Classification tag	Tag description
P	Those parameters are guaranteed during production testing on each individual device.
C	Those parameters are achieved by the design characterization by measuring a statistically relevant sample size across process variations.
T	Those parameters are achieved by design characterization on a small sample size from typical devices under typical conditions unless otherwise noted. All values shown in the typical column are within this category.
D	Those parameters are derived mainly from simulations.

Note: The classification is shown in the column labeled “C” in the parameter tables where appropriate.

4.2 NVUSRO register

Bit values in the Non-Volatile User Options (NVUSRO) Register control portions of the device configuration, namely electrical parameters such as high voltage supply and oscillator margin, as well as digital functionality (watchdog enable/disable after reset).

Distributor of STMicroelectronics: Excellent Integrated System Limited
Datasheet of SPC560B54L3C6E0Y - IC MCU 32BIT 768KB FLASH 100LQFP
Contact us: sales@integrated-circuit.com Website: www.integrated-circuit.com

For a detailed description of the NVUSRO register, please refer to the device reference manual.

4.2.1 NVUSRO[PAD3V5V] field description

The DC electrical characteristics are dependent on the PAD3V5V bit value. *Table 9* shows how NVUSRO[PAD3V5V] controls the device configuration.

Table 9. PAD3V5V field description(1)

Value(2)	Description
0	High voltage supply is 5.0 V
1	High voltage supply is 3.3 V

1. See the device reference manual for more information on the NVUSRO register.
2. Default manufacturing value is '1'. Value can be programmed by customer in Shadow Flash.

4.2.2 NVUSRO[OSCILLATOR_MARGIN] field description

The fast external crystal oscillator consumption is dependent on the OSCILLATOR_MARGIN bit value. *Table 10* shows how NVUSRO[OSCILLATOR_MARGIN] controls the device configuration.

Table 10. OSCILLATOR_MARGIN field description(1)

Value(2)	Description
0	Low consumption configuration (4 MHz/8 MHz)
1	High margin configuration (4 MHz/16 MHz)

1. See the device reference manual for more information on the NVUSRO register.
2. Default manufacturing value is '1'. Value can be programmed by customer in Shadow Flash.

4.2.3 NVUSRO[WATCHDOG_EN] field description

The watchdog enable/disable configuration after reset is dependent on the WATCHDOG_EN bit value. *Table 11* shows how NVUSRO[WATCHDOG_EN] controls the device configuration.

Table 11. WATCHDOG_EN field description

Value(1)	Description
0	Disable after reset
1	Enable after reset

1. Default manufacturing value is '1'. Value can be programmed by customer in Shadow Flash.

Distributor of STMicroelectronics: Excellent Integrated System Limited
Datasheet of SPC560B54L3C6E0Y - IC MCU 32BIT 768KB FLASH 100LQFP
Contact us: sales@integrated-circuit.com Website: www.integrated-circuit.com

4.3 Absolute maximum ratings

Table 12. Absolute maximum ratings

Symbol		Parameter	Conditions	Value		Unit
				Min	Max	
V_{SS}	SR	Digital ground on VSS_HV pins	—	0	0	V
V_{DD}	SR	Voltage on VDD_HV pins with respect to ground (V_{SS})	—	–0.3	6.0	V
V_{SS_LV}	SR	Voltage on VSS_LV (low voltage digital supply) pins with respect to ground (V_{SS})	—	V_{SS} – 0.1	V_{SS} + 0.1	V
V_{DD_BV}	SR	Voltage on VDD_BV (regulator supply) pin with respect to ground (V_{SS})	—	–0.3	6.0	V
			Relative to V_{DD}	–0.3	V_{DD} + 0.3	
V_{SS_ADC}	SR	Voltage on VSS_HV_ADC0, VSS_HV_ADC1 (ADC reference) pins with respect to ground (V_{SS})	—	V_{SS} – 0.1	V_{SS} + 0.1	V
V_{DD_ADC}	SR	Voltage on VDD_HV_ADC0, VDD_HV_ADC1 (ADC reference) pins with respect to ground (V_{SS})	—	–0.3	6.0	V
			Relative to V_{DD}	V_{DD} – 0.3	V_{DD} + 0.3	
V_{IN}	SR	Voltage on any GPIO pin with respect to ground (V_{SS})	—	–0.3	6.0	V
			Relative to V_{DD}	—	V_{DD} + 0.3	
I_{INJPAD}	SR	Injected input current on any pin during overload condition	—	–10	10	mA
I_{INJSUM}	SR	Absolute sum of all injected input currents during overload condition	—	–50	50	
I_{AVGSEG}	SR	Sum of all the static I/O current within a supply segment	V_{DD} = 5.0 V ± 10%, PAD3V5V = 0	—	70	mA
			V_{DD} = 3.3 V ± 10%, PAD3V5V = 1	—	64	
$T_{STORAGE}$	SR	Storage temperature	—	–55	150	°C

Note: Stresses exceeding the recommended absolute maximum ratings may cause permanent damage to the device. This is a stress rating only and functional operation of the device at these or any other conditions above those indicated in the operational sections of this specification are not implied. Exposure to absolute maximum rating conditions for extended periods may affect device reliability. During overload conditions ($V_{IN} > V_{DD}$ or $V_{IN} < V_{SS}$), the voltage on pins with respect to ground (V_{SS}) must not exceed the recommended values.

Distributor of STMicroelectronics: Excellent Integrated System Limited
Datasheet of SPC560B54L3C6E0Y - IC MCU 32BIT 768KB FLASH 100LQFP
Contact us: sales@integrated-circuit.com Website: www.integrated-circuit.com

4.4 Recommended operating conditions

Table 13. Recommended operating conditions (3.3 V)

Symbol		Parameter	Conditions	Value		Unit
				Min	Max	
V_{SS}	SR	Digital ground on VSS_HV pins	—	0	0	V
V_{DD}(1)	SR	Voltage on VDD_HV pins with respect to ground (V_{SS})	—	3.0	3.6	V
V_{SS_LV}(2)	SR	Voltage on VSS_LV (low voltage digital supply) pins with respect to ground (V_{SS})	—	V_{SS} – 0.1	V_{SS} + 0.1	V
V_{DD_BV}(3)	SR	Voltage on VDD_BV pin (regulator supply) with respect to ground (V_{SS})	—	3.0	3.6	V
			Relative to V_{DD}	V_{DD} – 0.1	V_{DD} + 0.1	
V_{SS_ADC}	SR	Voltage on VSS_HV_ADC0, VSS_HV_ADC1 (ADC reference) pin with respect to ground (V_{SS})	—	V_{SS} – 0.1	V_{SS} + 0.1	V
V_{DD_ADC}(4)	SR	Voltage on VDD_HV_ADC0, VDD_HV_ADC1 (ADC reference) with respect to ground (V_{SS})	—	3.0(5)	3.6	V
			Relative to V_{DD}	V_{DD} – 0.1	V_{DD} + 0.1	
V_{IN}	SR	Voltage on any GPIO pin with respect to ground (V_{SS})	—	V_{SS} – 0.1	—	V
			Relative to V_{DD}	—	V_{DD} + 0.1	
I_{INJPAD}	SR	Injected input current on any pin during overload condition	—	–5	5	mA
I_{INJSUM}	SR	Absolute sum of all injected input currents during overload condition	—	–50	50	
TV_{DD}	SR	V_{DD} slope to ensure correct power up(6)	—	3.0(7)	250×10^3 (0.25 [V/µs])	V/s

1. 100 nF capacitance needs to be provided between each V_{DD}/V_{SS} pair.
2. 330 nF capacitance needs to be provided between each V_{DD_LV}/V_{SS_LV} supply pair.
3. 470 nF capacitance needs to be provided between V_{DD_BV} and the nearest V_{SS_LV} (higher value may be needed depending on external regulator characteristics). Supply ramp slope on VDD_BV should always be faster or equal to slope of VDD_HV. Otherwise, device may enter regulator bypass mode if slope on VDD_BV is slower.
4. 100 nF capacitance needs to be provided between V_{DD_ADC}/V_{SS_ADC} pair.
5. Full electrical specification cannot be guaranteed when voltage drops below 3.0 V. In particular, ADC electrical characteristics and I/Os DC electrical specification may not be guaranteed. When voltage drops below V_{LVDHVL}, device is reset.
6. Guaranteed by device validation.
7. Minimum value of TV_{DD} must be guaranteed until V_{DD} reaches 2.6 V (maximum value of V_{PORH}).

Distributor of STMicroelectronics: Excellent Integrated System Limited
Datasheet of SPC560B54L3C6E0Y - IC MCU 32BIT 768KB FLASH 100LQFP
Contact us: sales@integrated-circuit.com Website: www.integrated-circuit.com

Table 14. Recommended operating conditions (5.0 V)

Symbol		Parameter	Conditions	Value		Unit
				Min	Max	
V_{SS}	SR	Digital ground on VSS_HV pins	—	0	0	V
V_{DD}(1)	SR	Voltage on VDD_HV pins with respect to ground (V_{SS})	—	4.5	5.5	V
			Voltage drop(2)	3.0	5.5	
V_{SS_LV}(3)	SR	Voltage on VSS_LV (low voltage digital supply) pins with respect to ground (V_{SS})	—	V_{SS} – 0.1	V_{SS} + 0.1	V
V_{DD_BV}(4)	SR	Voltage on VDD_BV pin (regulator supply) with respect to ground (V_{SS})	—	4.5	5.5	V
			Voltage drop(2)	3.0	5.5	
			Relative to V_{DD}	3.0	V_{DD} + 0.1	
V_{SS_ADC}	SR	Voltage on VSS_HV_ADC0, VSS_HV_ADC1 (ADC reference) pin with respect to ground (V_{SS})	—	V_{SS} – 0.1	V_{SS} + 0.1	V
V_{DD_ADC}(5)	SR	Voltage on VDD_HV_ADC0, VDD_HV_ADC1 (ADC reference) with respect to ground (V_{SS})	—	4.5	5.5	V
			Voltage drop(2)	3.0	5.5	
			Relative to V_{DD}	V_{DD} – 0.1	V_{DD} + 0.1	
V_{IN}	SR	Voltage on any GPIO pin with respect to ground (V_{SS})	—	V_{SS} – 0.1	—	V
			Relative to V_{DD}	—	V_{DD} + 0.1	
I_{INJPAD}	SR	Injected input current on any pin during overload condition	—	–5	5	mA
I_{INJSUM}	SR	Absolute sum of all injected input currents during overload condition	—	–50	50	
TV_{DD}	SR	V_{DD} slope to ensure correct power up(6)	—	3.0(7)	250×10^3 (0.25 [V/µs])	V/s

1. 100 nF capacitance needs to be provided between each V_{DD}/V_{SS} pair.
2. Full device operation is guaranteed by design when the voltage drops below 4.5 V down to 3.0 V. However, certain analog electrical characteristics will not be guaranteed to stay within the stated limits.
3. 330 nF capacitance needs to be provided between each V_{DD_LV}/V_{SS_LV} supply pair.
4. 470 nF capacitance needs to be provided between V_{DD_BV} and the nearest V_{SS_LV} (higher value may be needed depending on external regulator characteristics). While the supply voltage ramps up, the slope on V_{DD_BV} should be less than $0.9V_{DD_HV}$ in order to ensure the device does not enter regulator bypass mode.
5. 100 nF capacitance needs to be provided between V_{DD_ADC}/V_{SS_ADC} pair.
6. Guaranteed by device validation.
7. Minimum value of TV_{DD} must be guaranteed until V_{DD} reaches 2.6 V (maximum value of V_{PORH}).

Note: RAM data retention is guaranteed with V_{DD_LV} not below 1.08 V.

Distributor of STMicroelectronics: Excellent Integrated System Limited
Datasheet of SPC560B54L3C6E0Y - IC MCU 32BIT 768KB FLASH 100LQFP
Contact us: sales@integrated-circuit.com Website: www.integrated-circuit.com

4.5 Thermal characteristics

4.5.1 External ballast resistor recommendations

External ballast resistor on V_{DD_BV} pin helps in reducing the overall power dissipation inside the device. This resistor is required only when maximum power consumption exceeds the limit imposed by package thermal characteristics.

As stated in *Table 15* LQFP thermal characteristics, considering a thermal resistance of LQFP144 as 48.3 °C/W, at ambient temperature T_A = 125 °C, the junction temperature T_j will cross 150 °C if the total power dissipation is greater than (150 – 125)/48.3 = 517 mW. Therefore, the total device current I_{DDMAX} at 125 °C/5.5 V must not exceed 94.1 mA (i.e., PD/VDD). Assuming an average $I_{DD}(V_{DD_HV})$ of 15–20 mA consumption typically during device RUN mode, the LV domain consumption $I_{DD}(V_{DD_BV})$ is thus limited to $I_{DDMAX} - I_{DD}(V_{DD_HV})$, i.e., 80 mA.

Therefore, respecting the maximum power allowed as explained in *Section 4.5.2: Package thermal characteristics*, it is recommended to use this resistor only in the 125 °C/5.5 V operating corner as per the following guidelines:

- If $I_{DD}(V_{DD_BV}) < 80$ mA, then no resistor is required.
- If 80 mA < $I_{DD}(V_{DD_BV}) < 90$ mA, then 4 Ω resistor can be used.
- If $I_{DD}(V_{DD_BV}) > 90$ mA, then 8 Ω resistor can be used.

Using resistance in the range of 4–8 Ω, the gain will be around 10–20% of total consumption on V_{DD_BV}. For example, if 8 Ω resistor is used, then power consumption when $I_{DD}(V_{DD_BV})$ is 110 mA is equivalent to power consumption when $I_{DD}(V_{DD_BV})$ is 90 mA (approximately) when resistor not used.

In order to ensure correct power up, the minimum V_{DD_BV} to be guaranteed is 30 ms/V. If the supply ramp is slower than this value, then LVDHV3B monitoring ballast supply V_{DD_BV} pin gets triggered leading to device reset. Until the supply reaches certain threshold, this low voltage detector (LVD) generates destructive reset event in the system. This threshold depends on the maximum $I_{DD}(V_{DD_BV})$ possible across the external resistor.

4.5.2 Package thermal characteristics

Table 15. LQFP thermal characteristics(1)

Symbol		C	Parameter	Conditions(2)	Pin count	Value			Unit
						Min	Typ	Max	
$R_{\theta JA}$	CC	D	Thermal resistance, junction-to-ambient natural convection(3)	Single-layer board — 1s	100	—	—	64	°C/W
					144	—	—	64	
					176	—	—	64	
				Four-layer board — 2s2p	100	—	—	49.7	
					144	—	—	48.3	
					176	—	—	47.3	

Distributor of STMicroelectronics: Excellent Integrated System Limited
Datasheet of SPC560B54L3C6E0Y - IC MCU 32BIT 768KB FLASH 100LQFP
Contact us: sales@integrated-circuit.com Website: www.integrated-circuit.com

Table 15. LQFP thermal characteristics(1) (continued)

Symbol		C	Parameter	Conditions(2)	Pin count	Value			Unit
						Min	Typ	Max	
$R_{\theta JB}$	CC		Thermal resistance, junction-to-board(4)	Single-layer board — 1s	100	—	—	36	°C/W
					144	—	—	38	
					176	—	—	38	
				Four-layer board — 2s2p	100	—	—	33.6	
					144	—	—	33.4	
					176	—	—	33.4	
$R_{\theta JC}$	CC		Thermal resistance, junction-to-case(5)	Single-layer board — 1s	100	—	—	23	°C/W
					144	—	—	23	
					176	—	—	23	
				Four-layer board — 2s2p	100	—	—	19.8	
					144	—	—	19.2	
					176	—	—	18.8	

1. Thermal characteristics are targets based on simulation.
2. V_{DD} = 3.3 V ± 10% / 5.0 V ± 10%, T_A = –40 to 125 °C.
3. Junction-to-ambient thermal resistance determined per JEDEC JESD51-3 and JESD51-6. Thermal test board meets JEDEC specification for this package. When Greek letters are not available, the symbols are typed as R_{thJA} and R_{thJMA}.
4. Junction-to-board thermal resistance determined per JEDEC JESD51-8. Thermal test board meets JEDEC specification for the specified package. When Greek letters are not available, the symbols are typed as R_{thJB}.
5. Junction-to-case at the top of the package determined using MIL-STD 883 Method 1012.1. The cold plate temperature is used for the case temperature. Reported value includes the thermal resistance of the interface layer. When Greek letters are not available, the symbols are typed as R_{thJC}.

4.5.3 Power considerations

The average chip-junction temperature, T_J, in degrees Celsius, may be calculated using *Equation 1*:

Equation 1 $T_J = T_A + (P_D \times R_{\theta JA})$

Where:

T_A is the ambient temperature in °C.

$R_{\theta JA}$ is the package junction-to-ambient thermal resistance, in °C/W.

P_D is the sum of P_{INT} and $P_{I/O}$ ($P_D = P_{INT} + P_{I/O}$).

P_{INT} is the product of I_{DD} and V_{DD}, expressed in watts. This is the chip internal power.

$P_{I/O}$ represents the power dissipation on input and output pins; user determined.

Most of the time for the applications, $P_{I/O} < P_{INT}$ and may be neglected. On the other hand, $P_{I/O}$ may be significant, if the device is configured to continuously drive external modules and/or memories.

An approximate relationship between P_D and T_J (if $P_{I/O}$ is neglected) is given by:

Distributor of STMicroelectronics: Excellent Integrated System Limited
Datasheet of SPC560B54L3C6E0Y - IC MCU 32BIT 768KB FLASH 100LQFP
Contact us: sales@integrated-circuit.com Website: www.integrated-circuit.com

Equation 2 $P_D = K / (T_J + 273\ °C)$

Therefore, solving equations <Cross Refs>1 and <Cross Refs>2:

Equation 3 $K = P_D \times (T_A + 273\ °C) + R_{\theta JA} \times P_D^2$

Where:

K is a constant for the particular part, which may be determined from *Equation 3* by measuring P_D (at equilibrium) for a known T_A. Using this value of K, the values of P_D and T_J may be obtained by solving equations *Equation 1* and *Equation 2* iteratively for any value of T_A.

4.6 I/O pad electrical characteristics

4.6.1 I/O pad types

The device provides four main I/O pad types depending on the associated alternate functions:

- Slow pads—are the most common pads, providing a good compromise between transition time and low electromagnetic emission.
- Medium pads—provide transition fast enough for the serial communication channels with controlled current to reduce electromagnetic emission.
- Fast pads—provide maximum speed. These are used for improved Nexus debugging capability.
- Input only pads—are associated with ADC channels and 32 kHz low power external crystal oscillator providing low input leakage.

Medium and Fast pads can use slow configuration to reduce electromagnetic emission, at the cost of reducing AC performance.

4.6.2 I/O input DC characteristics

Table 16 provides input DC electrical characteristics as described in *Figure 6*.

Distributor of STMicroelectronics: Excellent Integrated System Limited
Datasheet of SPC560B54L3C6E0Y - IC MCU 32BIT 768KB FLASH 100LQFP
Contact us: sales@integrated-circuit.com Website: www.integrated-circuit.com

Figure 6. I/O input DC electrical characteristics definition

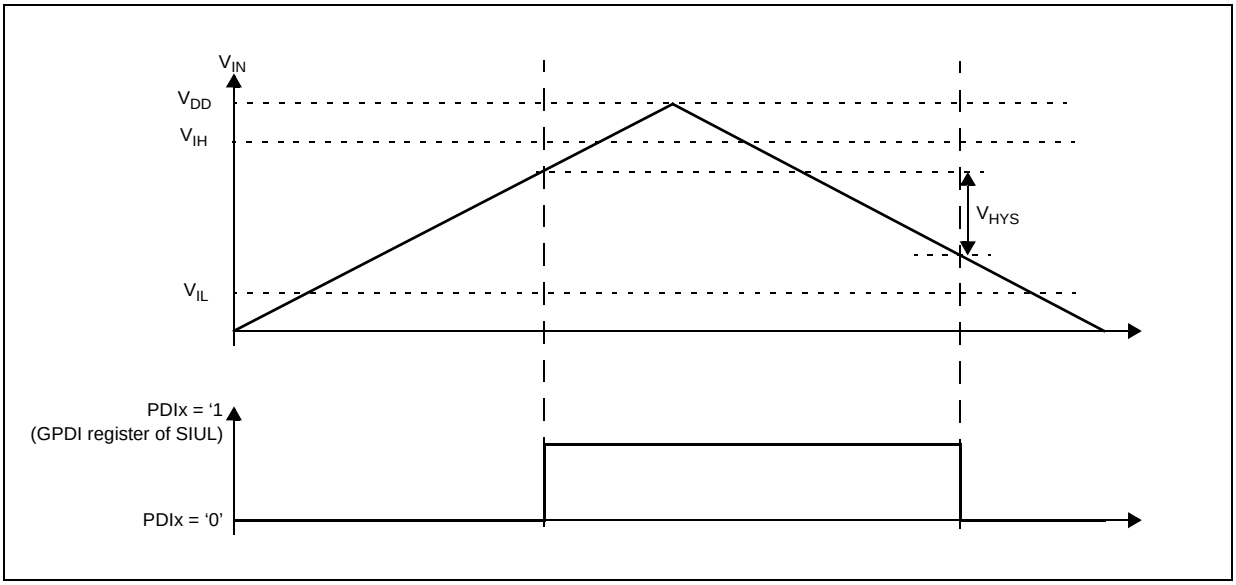

Table 16. I/O input DC electrical characteristics

Symbol		C	Parameter	Conditions[1]		Value			Unit
						Min	Typ	Max	
V_{IH}	SR	P	Input high level CMOS (Schmitt Trigger)	—		$0.65V_{DD}$	—	V_{DD} + 0.4	V
V_{IL}	SR	P	Input low level CMOS (Schmitt Trigger)	—		–0.4	—	$0.35V_{DD}$	
V_{HYS}	CC	C	Input hysteresis CMOS (Schmitt Trigger)	—		$0.1V_{DD}$	—	—	
I_{LKG}	CC	D	Digital input leakage	No injection on adjacent pin	T_A = –40 °C	—	2	200	nA
		D			T_A = 25 °C	—	2	200	
		D			T_A = 85 °C	—	5	300	
		D			T_A = 105 °C	—	12	500	
		P			T_A = 125 °C	—	70	1000	
W_{FI}[2]	SR	P	Wakeup input filtered pulse	—		—	—	40	ns
W_{NFI}[2]	SR	P	Wakeup input not filtered pulse	—		1000	—	—	ns

1. V_{DD} = 3.3 V ± 10% / 5.0 V ± 10%, T_A = –40 to 125 °C, unless otherwise specified.
2. In the range from 40 to 1000 ns, pulses can be filtered or not filtered, according to operating temperature and voltage.

Distributor of STMicroelectronics: Excellent Integrated System Limited
Datasheet of SPC560B54L3C6E0Y - IC MCU 32BIT 768KB FLASH 100LQFP
Contact us: sales@integrated-circuit.com Website: www.integrated-circuit.com

4.6.3 I/O output DC characteristics

The following tables provide DC characteristics for bidirectional pads:

- *Table 17* provides weak pull figures. Both pull-up and pull-down resistances are supported.
- *Table 18* provides output driver characteristics for I/O pads when in SLOW configuration.
- *Table 19* provides output driver characteristics for I/O pads when in MEDIUM configuration.
- *Table 20* provides output driver characteristics for I/O pads when in FAST configuration.

Table 17. I/O pull-up/pull-down DC electrical characteristics

Symbol		C	Parameter	Conditions[1]		Value			Unit
						Min	Typ	Max	
$\|I_{WPU}\|$	CC	P	Weak pull-up current absolute value	$V_{IN} = V_{IL}$, V_{DD} = 5.0 V ± 10%	PAD3V5V = 0	10	—	150	µA
		C			PAD3V5V = 1[2]	10	—	250	
		P		$V_{IN} = V_{IL}$, V_{DD} = 3.3 V ± 10%	PAD3V5V = 1	10	—	150	
$\|I_{WPD}\|$	CC	P	Weak pull-down current absolute value	$V_{IN} = V_{IH}$, V_{DD} = 5.0 V ± 10%	PAD3V5V = 0	10	—	150	µA
		C			PAD3V5V = 1	10	—	250	
		P		$V_{IN} = V_{IH}$, V_{DD} = 3.3 V ± 10%	PAD3V5V = 1	10	—	150	

1. V_{DD} = 3.3 V ± 10% / 5.0 V ± 10%, T_A = –40 to 125 °C, unless otherwise specified.
2. The configuration PAD3V5 = 1 when V_{DD} = 5 V is only a transient configuration during power-up. All pads but RESET and Nexus output (MDOx, EVTO, MCKO) are configured in input or in high impedance state.

Table 18. SLOW configuration output buffer electrical characteristics

Symbol		C	Parameter	Conditions[1]		Value			Unit
						Min	Typ	Max	
V_{OH}	CC	P	Output high level SLOW configuration	Push Pull	I_{OH} = –2 mA, V_{DD} = 5.0 V ± 10%, PAD3V5V = 0 (recommended)	0.8V_{DD}	—	—	V
		C			I_{OH} = –2 mA, V_{DD} = 5.0 V ± 10%, PAD3V5V = 1[2]	0.8V_{DD}	—	—	
		C			I_{OH} = –1 mA, V_{DD} = 3.3 V ± 10%, PAD3V5V = 1 (recommended)	V_{DD} – 0.8	—	—	

Distributor of STMicroelectronics: Excellent Integrated System Limited
Datasheet of SPC560B54L3C6E0Y - IC MCU 32BIT 768KB FLASH 100LQFP
Contact us: sales@integrated-circuit.com Website: www.integrated-circuit.com

Table 18. SLOW configuration output buffer electrical characteristics (continued)

Symbol		C	Parameter	Conditions[1]		Value			Unit
						Min	Typ	Max	
V_{OL}	CC	P	Output low level SLOW configuration	Push Pull	I_{OL} = 2 mA, V_{DD} = 5.0 V ± 10%, PAD3V5V = 0 (recommended)	—	—	$0.1V_{DD}$	V
		C			I_{OL} = 2 mA, V_{DD} = 5.0 V ± 10%, PAD3V5V = 1[2]	—	—	$0.1V_{DD}$	
		C			I_{OL} = 1 mA, V_{DD} = 3.3 V ± 10%, PAD3V5V = 1 (recommended)	—	—	0.5	

1. V_{DD} = 3.3 V ± 10% / 5.0 V ± 10%, T_A = –40 to 125 °C, unless otherwise specified.
2. The configuration PAD3V5 = 1 when V_{DD} = 5 V is only a transient configuration during power-up. All pads but RESET and Nexus output (MDOx, EVTO, MCKO) are configured in input or in high impedance state.

Table 19. MEDIUM configuration output buffer electrical characteristics

Symbol		C	Parameter	Conditions[1]		Value			Unit
						Min	Typ	Max	
V_{OH}	CC	C	Output high level MEDIUM configuration	Push Pull	I_{OH} = –3.8 mA, V_{DD} = 5.0 V ± 10%, PAD3V5V = 0	$0.8V_{DD}$	—	—	V
		P			I_{OH} = –2 mA, V_{DD} = 5.0 V ± 10%, PAD3V5V = 0 (recommended)	$0.8V_{DD}$	—	—	
		C			I_{OH} = –1 mA, V_{DD} = 5.0 V ± 10%, PAD3V5V = 1[2]	$0.8V_{DD}$	—	—	
		C			I_{OH} = –1 mA, V_{DD} = 3.3 V ± 10%, PAD3V5V = 1 (recommended)	V_{DD} – 0.8	—	—	
		C			I_{OH} = –100 µA, V_{DD} = 5.0 V ± 10%, PAD3V5V = 0	$0.8V_{DD}$	—	—	
V_{OL}	CC	C	Output low level MEDIUM configuration	Push Pull	I_{OL} = 3.8 mA, V_{DD} = 5.0 V ± 10%, PAD3V5V = 0	—	—	$0.2V_{DD}$	V
		P			I_{OL} = 2 mA, V_{DD} = 5.0 V ± 10%, PAD3V5V = 0 (recommended)	—	—	$0.1V_{DD}$	
		C			I_{OL} = 1 mA, V_{DD} = 5.0 V ± 10%, PAD3V5V = 1[2]	—	—	$0.1V_{DD}$	
		C			I_{OL} = 1 mA, V_{DD} = 3.3 V ± 10%, PAD3V5V = 1 (recommended)	—	—	0.5	
		C			I_{OL} = 100 µA, V_{DD} = 5.0 V ± 10%, PAD3V5V = 0	—	—	$0.1V_{DD}$	

Distributor of STMicroelectronics: Excellent Integrated System Limited
Datasheet of SPC560B54L3C6E0Y - IC MCU 32BIT 768KB FLASH 100LQFP
Contact us: sales@integrated-circuit.com Website: www.integrated-circuit.com

1. V_{DD} = 3.3 V ± 10% / 5.0 V ± 10%, T_A = –40 to 125 °C, unless otherwise specified.
2. The configuration PAD3V5 = 1 when V_{DD} = 5 V is only a transient configuration during power-up. All pads but RESET and Nexus output (MDOx, EVTO, MCKO) are configured in input or in high impedance state.

Table 20. FAST configuration output buffer electrical characteristics

Symbol		C	Parameter	Conditions(1)		Value			Unit
						Min	Typ	Max	
V_{OH}	CC	P	Output high level FAST configuration	Push Pull	I_{OH} = –14 mA, V_{DD} = 5.0 V ± 10%, PAD3V5V = 0 (recommended)	0.8V_{DD}	—	—	V
		C			I_{OH} = –7 mA, V_{DD} = 5.0 V ± 10%, PAD3V5V = 1(2)	0.8V_{DD}	—	—	
		C			I_{OH} = –11 mA, V_{DD} = 3.3 V ± 10%, PAD3V5V = 1 (recommended)	V_{DD} – 0.8	—	—	
V_{OL}	CC	P	Output low level FAST configuration	Push Pull	I_{OL} = 14 mA, V_{DD} = 5.0 V ± 10%, PAD3V5V = 0 (recommended)	—	—	0.1V_{DD}	V
		C			I_{OL} = 7 mA, V_{DD} = 5.0 V ± 10%, PAD3V5V = 1(2)	—	—	0.1V_{DD}	
		C			I_{OL} = 11 mA, V_{DD} = 3.3 V ± 10%, PAD3V5V = 1 (recommended)	—	—	0.5	

1. V_{DD} = 3.3 V ± 10% / 5.0 V ± 10%, T_A = –40 to 125 °C, unless otherwise specified.
2. The configuration PAD3V5 = 1 when V_{DD} = 5 V is only a transient configuration during power-up. All pads but RESET and Nexus output (MDOx, EVTO, MCKO) are configured in input or in high impedance state.

4.6.4 Output pin transition times

Table 21. Output pin transition times

Symbol		C	Parameter	Conditions(1)		Value			Unit
						Min	Typ	Max	
t_{tr}	CC	D	Output transition time output pin(2) SLOW configuration	C_L = 25 pF	V_{DD} = 5.0 V ± 10%, PAD3V5V = 0	—	—	50	ns
		T		C_L = 50 pF		—	—	100	
		D		C_L = 100 pF		—	—	125	
		D		C_L = 25 pF	V_{DD} = 3.3 V ± 10%, PAD3V5V = 1	—	—	50	
		T		C_L = 50 pF		—	—	100	
		D		C_L = 100 pF		—	—	125	

Distributor of STMicroelectronics: Excellent Integrated System Limited
Datasheet of SPC560B54L3C6E0Y - IC MCU 32BIT 768KB FLASH 100LQFP
Contact us: sales@integrated-circuit.com Website: www.integrated-circuit.com

Table 21. Output pin transition times (continued)

Symbol		C	Parameter	Conditions[1]		Value			Unit
						Min	Typ	Max	
t_{tr}	CC	D	Output transition time output pin[2] MEDIUM configuration	C_L = 25 pF	V_{DD} = 5.0 V ± 10%, PAD3V5V = 0 SIUL.PCRx.SRC = 1	—	—	10	ns
		T		C_L = 50 pF		—	—	20	
		D		C_L = 100 pF		—	—	40	
		D		C_L = 25 pF	V_{DD} = 3.3 V ± 10%, PAD3V5V = 1 SIUL.PCRx.SRC = 1	—	—	12	
		T		C_L = 50 pF		—	—	25	
		D		C_L = 100 pF		—	—	40	
t_{tr}	CC	D	Output transition time output pin[2] FAST configuration	C_L = 25 pF	V_{DD} = 5.0 V ± 10%, PAD3V5V = 0	—	—	4	ns
				C_L = 50 pF		—	—	6	
				C_L = 100 pF		—	—	12	
				C_L = 25 pF	V_{DD} = 3.3 V ± 10%, PAD3V5V = 1	—	—	4	
				C_L = 50 pF		—	—	7	
				C_L = 100 pF		—	—	12	

1. V_{DD} = 3.3 V ± 10% / 5.0 V ± 10%, T_A = –40 to 125 °C, unless otherwise specified.
2. C_L includes device and package capacitances (C_{PKG} < 5 pF).

4.6.5 I/O pad current specification

The I/O pads are distributed across the I/O supply segment. Each I/O supply segment is associated to a V_{DD}/V_{SS} supply pair as described in *Table 22*.

Table 23 provides I/O consumption figures.

In order to ensure device reliability, the average current of the I/O on a single segment should remain below the I_{AVGSEG} maximum value.

Table 22. I/O supply segments

Package	Supply segment							
	1	2	3	4	5	6	7	8
LBGA208 (1)	Equivalent to LQFP176 segment pad distribution						MCKO	MDOn /MSEO
LQFP176	pin7 – pin27	pin28 – pin57	pin59 – pin85	pin86 – pin123	pin124 – pin150	pin151 – pin6	—	—
LQFP144	pin20 – pin49	pin51 – pin99	pin100 – pin122	pin 123 – pin19	—	—	—	—
LQFP100	pin16 – pin35	pin37 – pin69	pin70 – pin83	pin84 – pin15	—	—	—	—

1. LBGA208 available only as development package for Nexus2+.

Distributor of STMicroelectronics: Excellent Integrated System Limited
Datasheet of SPC560B54L3C6E0Y - IC MCU 32BIT 768KB FLASH 100LQFP
Contact us: sales@integrated-circuit.com Website: www.integrated-circuit.com

Table 23. I/O consumption

Symbol		C	Parameter	Conditions[1]		Value			Unit
						Min	Typ	Max	
I_{SWTSLW}[2]	CC	D	Dynamic I/O current for SLOW configuration	C_L = 25 pF	V_{DD} = 5.0 V ± 10%, PAD3V5V = 0	—	—	20	mA
					V_{DD} = 3.3 V ± 10%, PAD3V5V = 1	—	—	16	
I_{SWTMED}[2]	CC	D	Dynamic I/O current for MEDIUM configuration	C_L = 25 pF	V_{DD} = 5.0 V ± 10%, PAD3V5V = 0	—	—	29	mA
					V_{DD} = 3.3 V ± 10%, PAD3V5V = 1	—	—	17	
I_{SWTFST}[2]	CC	D	Dynamic I/O current for FAST configuration	C_L = 25 pF	V_{DD} = 5.0 V ± 10%, PAD3V5V = 0	—	—	110	mA
					V_{DD} = 3.3 V ± 10%, PAD3V5V = 1	—	—	50	
I_{RMSSLW}	CC	D	Root mean square I/O current for SLOW configuration	C_L = 25 pF, 2 MHz	V_{DD} = 5.0 V ± 10%, PAD3V5V = 0	—	—	2.3	mA
				C_L = 25 pF, 4 MHz		—	—	3.2	
				C_L = 100 pF, 2 MHz		—	—	6.6	
				C_L = 25 pF, 2 MHz	V_{DD} = 3.3 V ± 10%, PAD3V5V = 1	—	—	1.6	
				C_L = 25 pF, 4 MHz		—	—	2.3	
				C_L = 100 pF, 2 MHz		—	—	4.7	
I_{RMSMED}	CC	D	Root mean square I/O current for MEDIUM configuration	C_L = 25 pF, 13 MHz	V_{DD} = 5.0 V ± 10%, PAD3V5V = 0	—	—	6.6	mA
				C_L = 25 pF, 40 MHz		—	—	13.4	
				C_L = 100 pF, 13 MHz		—	—	18.3	
				C_L = 25 pF, 13 MHz	V_{DD} = 3.3 V ± 10%, PAD3V5V = 1	—	—	5	
				C_L = 25 pF, 40 MHz		—	—	8.5	
				C_L = 100 pF, 13 MHz		—	—	11	
I_{RMSFST}	CC	D	Root mean square I/O current for FAST configuration	C_L = 25 pF, 40 MHz	V_{DD} = 5.0 V ± 10%, PAD3V5V = 0	—	—	22	mA
				C_L = 25 pF, 64 MHz		—	—	33	
				C_L = 100 pF, 40 MHz		—	—	56	
				C_L = 25 pF, 40 MHz	V_{DD} = 3.3 V ± 10%, PAD3V5V = 1	—	—	14	
				C_L = 25 pF, 64 MHz		—	—	20	
				C_L = 100 pF, 40 MHz		—	—	35	
I_{AVGSEG}	SR	D	Sum of all the static I/O current within a supply segment	V_{DD} = 5.0 V ± 10%, PAD3V5V = 0		—	—	70	mA
				V_{DD} = 3.3 V ± 10%, PAD3V5V = 1		—	—	65	

1. V_{DD} = 3.3 V ± 10% / 5.0 V ± 10%, T_A = –40 to125 °C, unless otherwise specified
2. Stated maximum values represent peak consumption that lasts only a few ns during I/O transition.

Table 24 provides the weight of concurrent switching I/Os.

Distributor of STMicroelectronics: Excellent Integrated System Limited
Datasheet of SPC560B54L3C6E0Y - IC MCU 32BIT 768KB FLASH 100LQFP
Contact us: sales@integrated-circuit.com Website: www.integrated-circuit.com

Due to the dynamic current limitations, the sum of the weight of concurrent switching I/Os on a single segment must not exceed 100% to ensure device functionality.

Table 24. I/O weight(1)

Supply segment			Pad	LQFP176				LQFP144/100			
				Weight 5 V		Weight 3.3 V		Weight 5 V		Weight 3.3 V	
LQFP 176	LQFP 144	LQFP 100		SRC(2) = 0	SRC = 1	SRC = 0	SRC = 1	SRC = 0	SRC = 1	SRC = 0	SRC = 1
6	4	4	PB[3]	5%	—	6%	—	13%	—	15%	—
			PC[9]	4%	—	5%	—	13%	—	15%	—
			PC[14]	4%	—	4%	—	13%	—	15%	—
			PC[15]	3%	4%	4%	4%	12%	18%	15%	16%
	—	—	PJ[4]	3%	4%	3%	3%	—	—	—	—
1	—	—	PH[15]	2%	3%	3%	3%	—	—	—	—
	—	—	PH[13]	3%	4%	3%	4%	—	—	—	—
	—	—	PH[14]	3%	4%	4%	4%	—	—	—	—
	—	—	PI[6]	4%	—	4%	—	—	—	—	—
	—	—	PI[7]	4%	—	4%	—	—	—	—	—
	4	—	PG[5]	4%	—	5%	—	10%	—	12%	—
		—	PG[4]	4%	6%	5%	5%	9%	13%	11%	12%
		—	PG[3]	4%	—	5%	—	9%	—	11%	—
		—	PG[2]	4%	6%	5%	5%	9%	12%	10%	11%
		4	PA[2]	4%	—	5%	—	8%	—	10%	—
			PE[0]	4%	—	5%	—	8%	—	9%	—
			PA[1]	4%	—	5%	—	8%	—	9%	—
			PE[1]	4%	6%	5%	6%	7%	10%	9%	9%
			PE[8]	4%	6%	5%	6%	7%	10%	8%	9%
			PE[9]	4%	—	5%	—	6%	—	8%	—
			PE[10]	4%	—	5%	—	6%	—	7%	—
			PA[0]	4%	6%	5%	5%	6%	8%	7%	7%
			PE[11]	4%	—	5%	—	5%	—	6%	—

Distributor of STMicroelectronics: Excellent Integrated System Limited
Datasheet of SPC560B54L3C6E0Y - IC MCU 32BIT 768KB FLASH 100LQFP
Contact us: sales@integrated-circuit.com Website: www.integrated-circuit.com

Table 24. I/O weight(1) (continued)

Supply segment			Pad	LQFP176				LQFP144/100			
				Weight 5 V		Weight 3.3 V		Weight 5 V		Weight 3.3 V	
LQFP 176	LQFP 144	LQFP 100		SRC(2) = 0	SRC = 1	SRC = 0	SRC = 1	SRC = 0	SRC = 1	SRC = 0	SRC = 1
2	1	—	PG[9]	9%	—	10%	—	9%	—	10%	—
		—	PG[8]	9%	—	11%	—	9%	—	11%	—
		1	PC[11]	9%	—	11%	—	9%	—	11%	—
			PC[10]	9%	13%	11%	12%	9%	13%	11%	12%
		—	PG[7]	9%	—	11%	—	9%	—	11%	—
		—	PG[6]	10%	14%	11%	12%	10%	14%	11%	12%
		1	PB[0]	10%	14%	12%	12%	10%	14%	12%	12%
			PB[1]	10%	—	12%	—	10%	—	12%	—
		—	PF[9]	10%	—	12%	—	10%	—	12%	—
		—	PF[8]	10%	14%	12%	13%	10%	14%	12%	13%
		—	PF[12]	10%	15%	12%	13%	10%	15%	12%	13%
		1	PC[6]	10%	—	12%	—	10%	—	12%	—
			PC[7]	10%	—	12%	—	10%	—	12%	—
		—	PF[10]	10%	14%	11%	12%	10%	14%	11%	12%
		—	PF[11]	9%	—	11%	—	9%	—	11%	—
		1	PA[15]	8%	12%	10%	10%	8%	12%	10%	10%
		—	PF[13]	8%	—	10%	—	8%	—	10%	—
		1	PA[14]	8%	11%	9%	10%	8%	11%	9%	10%
			PA[4]	7%	—	9%	—	7%	—	9%	—
			PA[13]	7%	10%	8%	9%	7%	10%	8%	9%
			PA[12]	7%	—	8%	—	7%	—	8%	—

Distributor of STMicroelectronics: Excellent Integrated System Limited
Datasheet of SPC560B54L3C6E0Y - IC MCU 32BIT 768KB FLASH 100LQFP
Contact us: sales@integrated-circuit.com Website: www.integrated-circuit.com

Table 24. I/O weight[1] (continued)

Supply segment			Pad	LQFP176				LQFP144/100			
				Weight 5 V		Weight 3.3 V		Weight 5 V		Weight 3.3 V	
LQFP 176	LQFP 144	LQFP 100		SRC[2] = 0	SRC = 1	SRC = 0	SRC = 1	SRC = 0	SRC = 1	SRC = 0	SRC = 1
3	2	2	PB[9]	1%	—	1%	—	1%	—	1%	—
			PB[8]	1%	—	1%	—	1%	—	1%	—
			PB[10]	5%	—	6%	—	6%	—	7%	—
		—	PF[0]	5%	—	6%	—	6%	—	8%	—
		—	PF[1]	5%	—	6%	—	7%	—	8%	—
		—	PF[2]	6%	—	7%	—	7%	—	9%	—
		—	PF[3]	6%	—	7%	—	8%	—	9%	—
		—	PF[4]	6%	—	7%	—	8%	—	10%	—
		—	PF[5]	6%	—	7%	—	9%	—	10%	—
		—	PF[6]	6%	—	7%	—	9%	—	11%	—
		—	PF[7]	6%	—	7%	—	9%	—	11%	—
	—	—	PJ[3]	6%	—	7%	—	—	—	—	—
	—	—	PJ[2]	6%	—	7%	—	—	—	—	—
	—	—	PJ[1]	6%	—	7%	—	—	—	—	—
	—	—	PJ[0]	6%	—	7%	—	—	—	—	—
	—	—	PI[15]	6%	—	7%	—	—	—	—	—
	—	—	PI[14]	6%	—	7%	—	—	—	—	—
	2	2	PD[0]	1%	—	1%	—	1%	—	1%	—
			PD[1]	1%	—	1%	—	1%	—	1%	—
			PD[2]	1%	—	1%	—	1%	—	1%	—
			PD[3]	1%	—	1%	—	1%	—	1%	—
			PD[4]	1%	—	1%	—	1%	—	1%	—
			PD[5]	1%	—	1%	—	1%	—	1%	—
			PD[6]	1%	—	1%	—	1%	—	2%	—
			PD[7]	1%	—	1%	—	1%	—	2%	—

Distributor of STMicroelectronics: Excellent Integrated System Limited
Datasheet of SPC560B54L3C6E0Y - IC MCU 32BIT 768KB FLASH 100LQFP
Contact us: sales@integrated-circuit.com Website: www.integrated-circuit.com

Table 24. I/O weight[1] (continued)

Supply segment			Pad	LQFP176				LQFP144/100			
				Weight 5 V		Weight 3.3 V		Weight 5 V		Weight 3.3 V	
LQFP 176	LQFP 144	LQFP 100		SRC[2] = 0	SRC = 1	SRC = 0	SRC = 1	SRC = 0	SRC = 1	SRC = 0	SRC = 1
4	2	2	PD[8]	1%	—	1%	—	1%	—	2%	—
			PB[4]	1%	—	1%	—	1%	—	2%	—
			PB[5]	1%	—	1%	—	1%	—	2%	—
			PB[6]	1%	—	1%	—	1%	—	2%	—
			PB[7]	1%	—	1%	—	1%	—	2%	—
			PD[9]	1%	—	1%	—	1%	—	2%	—
			PD[10]	1%	—	1%	—	1%	—	2%	—
			PD[11]	1%	—	1%	—	1%	—	2%	—

EIS electronic components
Distributor of STMicroelectronics: Excellent Integrated System Limited
Datasheet of SPC560B54L3C6E0Y - IC MCU 32BIT 768KB FLASH 100LQFP
Contact us: sales@integrated-circuit.com Website: www.integrated-circuit.com

Table 24. I/O weight[1] (continued)

Supply segment			Pad	LQFP176				LQFP144/100			
				Weight 5 V		Weight 3.3 V		Weight 5 V		Weight 3.3 V	
LQFP 176	LQFP 144	LQFP 100		SRC[2] = 0	SRC = 1	SRC = 0	SRC = 1	SRC = 0	SRC = 1	SRC = 0	SRC = 1
4	—	—	PB[11]	1%	—	1%	—	—	—	—	—
	—	—	PD[12]	11%	—	13%	—	—	—	—	—
	2	2	PB[12]	11%	—	13%	—	15%	—	17%	—
			PD[13]	11%	—	13%	—	14%	—	17%	—
			PB[13]	11%	—	13%	—	14%	—	17%	—
			PD[14]	11%	—	13%	—	14%	—	17%	—
			PB[14]	11%	—	13%	—	14%	—	16%	—
			PD[15]	11%	—	13%	—	13%	—	16%	—
			PB[15]	11%	—	13%	—	13%	—	15%	—
	—	—	PI[8]	10%	—	12%	—	—	—	—	—
	—	—	PI[9]	10%	—	12%	—	—	—	—	—
	—	—	PI[10]	10%	—	12%	—	—	—	—	—
	—	—	PI[11]	10%	—	12%	—	—	—	—	—
	—	—	PI[12]	10%	—	12%	—	—	—	—	—
	—	—	PI[13]	10%	—	11%	—	—	—	—	—
	2	2	PA[3]	9%	—	11%	—	11%	—	13%	—
		—	PG[13]	9%	13%	11%	11%	10%	14%	12%	13%
		—	PG[12]	9%	13%	10%	11%	10%	14%	12%	12%
		—	PH[0]	6%	8%	7%	7%	6%	9%	7%	8%
		—	PH[1]	6%	8%	7%	7%	6%	8%	7%	7%
		—	PH[2]	5%	7%	6%	6%	5%	7%	6%	7%
		—	PH[3]	5%	7%	5%	6%	5%	7%	6%	6%
		—	PG[1]	4%	—	5%	—	4%	—	5%	—
		—	PG[0]	4%	5%	4%	5%	4%	5%	4%	5%

Distributor of STMicroelectronics: Excellent Integrated System Limited
Datasheet of SPC560B54L3C6E0Y - IC MCU 32BIT 768KB FLASH 100LQFP
Contact us: sales@integrated-circuit.com Website: www.integrated-circuit.com

Table 24. I/O weight(1) (continued)

Supply segment			Pad	LQFP176				LQFP144/100			
				Weight 5 V		Weight 3.3 V		Weight 5 V		Weight 3.3 V	
LQFP 176	LQFP 144	LQFP 100		SRC(2) = 0	SRC = 1	SRC = 0	SRC = 1	SRC = 0	SRC = 1	SRC = 0	SRC = 1
5	3	—	PF[15]	4%	—	4%	—	4%	—	4%	—
		—	PF[14]	4%	6%	5%	5%	4%	6%	5%	5%
		—	PE[13]	4%	—	5%	—	4%	—	5%	—
		3	PA[7]	5%	—	6%	—	5%	—	6%	—
			PA[8]	5%	—	6%	—	5%	—	6%	—
			PA[9]	6%	—	7%	—	6%	—	7%	—
			PA[10]	6%	—	8%	—	6%	—	8%	—
			PA[11]	8%	—	9%	—	8%	—	9%	—
			PE[12]	8%	—	9%	—	8%	—	9%	—
		—	PG[14]	8%	—	9%	—	8%	—	9%	—
		—	PG[15]	8%	11%	9%	10%	8%	11%	9%	10%
		—	PE[14]	8%	—	9%	—	8%	—	9%	—
		—	PE[15]	8%	11%	9%	10%	8%	11%	9%	10%
		—	PG[10]	8%	—	9%	—	8%	—	9%	—
		—	PG[11]	7%	11%	9%	9%	7%	11%	9%	9%
	—	—	PH[11]	7%	10%	9%	9%	—	—	—	—
	—	—	PH[12]	7%	10%	8%	9%	—	—	—	—
	—	—	PI[5]	7%	—	8%	—	—	—	—	—
	—	—	PI[4]	7%	—	8%	—	—	—	—	—
	3	3	PC[3]	6%	—	8%	—	6%	—	8%	—
			PC[2]	6%	8%	7%	7%	6%	8%	7%	7%
			PA[5]	6%	8%	7%	7%	6%	8%	7%	7%
			PA[6]	5%	—	6%	—	5%	—	6%	—
			PH[10]	5%	7%	6%	6%	5%	7%	6%	6%
			PC[1]	5%	19%	5%	13%	5%	19%	5%	13%

Distributor of STMicroelectronics: Excellent Integrated System Limited
Datasheet of SPC560B54L3C6E0Y - IC MCU 32BIT 768KB FLASH 100LQFP
Contact us: sales@integrated-circuit.com Website: www.integrated-circuit.com

Table 24. I/O weight(1) (continued)

Supply segment			Pad	LQFP176				LQFP144/100			
				Weight 5 V		Weight 3.3 V		Weight 5 V		Weight 3.3 V	
LQFP 176	LQFP 144	LQFP 100		SRC(2) = 0	SRC = 1	SRC = 0	SRC = 1	SRC = 0	SRC = 1	SRC = 0	SRC = 1
6	4	4	PC[0]	6%	9%	7%	8%	7%	10%	8%	8%
			PH[9]	7%	—	8%	—	7%	—	9%	—
			PE[2]	7%	10%	8%	9%	8%	11%	9%	10%
			PE[3]	7%	10%	9%	9%	8%	12%	10%	10%
			PC[5]	7%	11%	9%	9%	8%	12%	10%	11%
			PC[4]	8%	11%	9%	10%	9%	13%	10%	11%
			PE[4]	8%	11%	9%	10%	9%	13%	11%	12%
			PE[5]	8%	11%	10%	10%	9%	14%	11%	12%
		—	PH[4]	8%	12%	10%	10%	10%	14%	12%	12%
		—	PH[5]	8%	—	10%	—	10%	—	12%	—
		—	PH[6]	8%	12%	10%	11%	10%	15%	12%	13%
		—	PH[7]	9%	12%	10%	11%	11%	15%	13%	13%
		—	PH[8]	9%	12%	10%	11%	11%	16%	13%	14%
		4	PE[6]	9%	12%	10%	11%	11%	16%	13%	14%
			PE[7]	9%	12%	10%	11%	11%	16%	14%	14%
	—	—	PI[3]	9%	—	10%	—	—	—	—	—
	—	—	PI[2]	9%	—	10%	—	—	—	—	—
	—	—	PI[1]	9%	—	10%	—	—	—	—	—
	—	—	PI[0]	9%	—	10%	—	—	—	—	—
	4	4	PC[12]	8%	12%	10%	11%	12%	18%	15%	16%
			PC[13]	8%	—	10%	—	13%	—	15%	—
			PC[8]	8%	—	10%	—	13%	—	15%	—
			PB[2]	8%	11%	9%	10%	13%	18%	15%	16%

1. V_{DD} = 3.3 V ± 10% / 5.0 V ± 10%, T_A = –40 to 125 °C, unless otherwise specified.
2. SRC: “Slew Rate Control” bit in SIU_PCRx.

4.7 $\overline{\text{RESET}}$ electrical characteristics

The device implements a dedicated bidirectional $\overline{\text{RESET}}$ pin.

Distributor of STMicroelectronics: Excellent Integrated System Limited
Datasheet of SPC560B54L3C6E0Y - IC MCU 32BIT 768KB FLASH 100LQFP
Contact us: sales@integrated-circuit.com Website: www.integrated-circuit.com

Figure 7. Start-up reset requirements

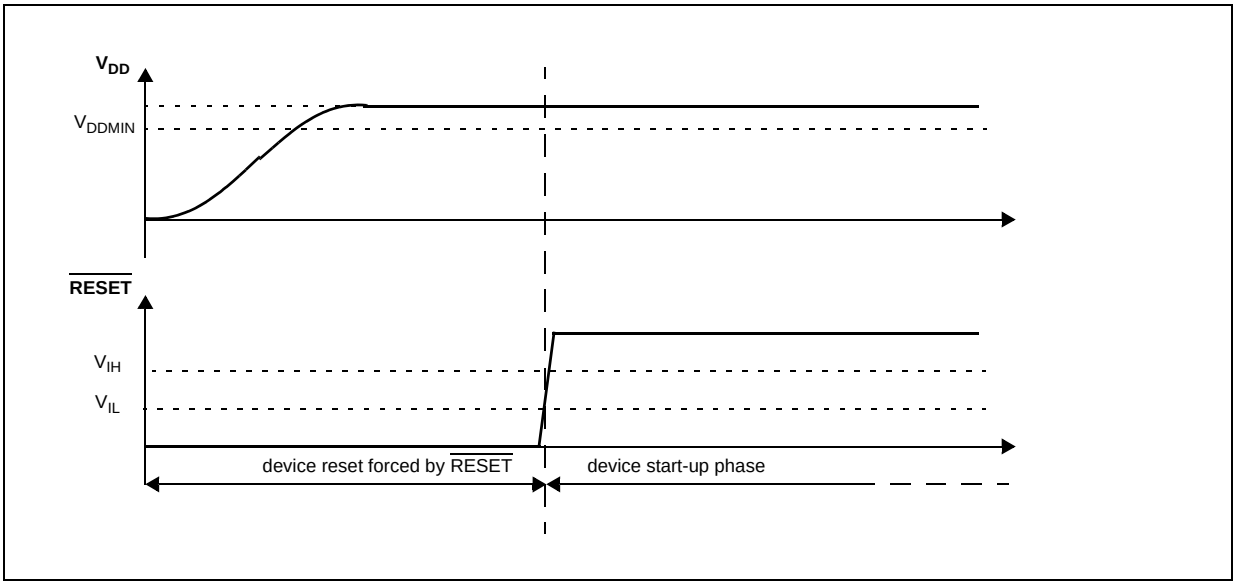

Figure 8. Noise filtering on reset signal

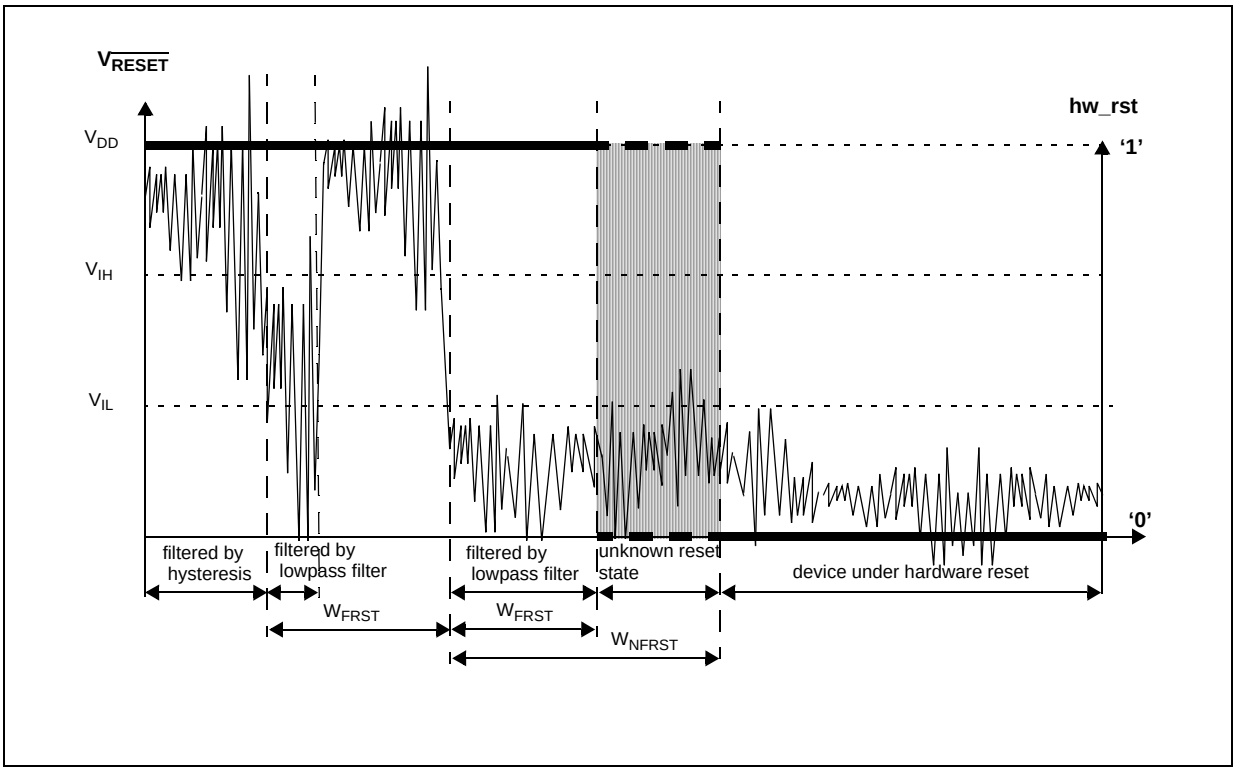

Distributor of STMicroelectronics: Excellent Integrated System Limited
Datasheet of SPC560B54L3C6E0Y - IC MCU 32BIT 768KB FLASH 100LQFP
Contact us: sales@integrated-circuit.com Website: www.integrated-circuit.com

Table 25. Reset electrical characteristics

Symbol		C	Parameter	Conditions[1]	Value			Unit
					Min	Typ	Max	
V_{IH}	SR	P	Input High Level CMOS (Schmitt Trigger)	—	$0.65V_{DD}$	—	V_{DD} + 0.4	V
V_{IL}	SR	P	Input low Level CMOS (Schmitt Trigger)	—	–0.4	—	$0.35V_{DD}$	V
V_{HYS}	CC	C	Input hysteresis CMOS (Schmitt Trigger)	—	$0.1V_{DD}$	—	—	V
V_{OL}	CC	P	Output low level	Push Pull, I_{OL} = 2 mA, V_{DD} = 5.0 V ± 10%, PAD3V5V = 0 (recommended)	—	—	$0.1V_{DD}$	V
				Push Pull, I_{OL} = 1 mA, V_{DD} = 5.0 V ± 10%, PAD3V5V = 1[2]	—	—	$0.1V_{DD}$	
				Push Pull, I_{OL} = 1 mA, V_{DD} = 3.3 V ± 10%, PAD3V5V = 1 (recommended)	—	—	0.5	
t_{tr}	CC	D	Output transition time output pin[3] MEDIUM configuration	C_L = 25 pF, V_{DD} = 5.0 V ± 10%, PAD3V5V = 0	—	—	10	ns
				C_L = 50 pF, V_{DD} = 5.0 V ± 10%, PAD3V5V = 0	—	—	20	
				C_L = 100 pF, V_{DD} = 5.0 V ± 10%, PAD3V5V = 0	—	—	40	
				C_L = 25 pF, V_{DD} = 3.3 V ± 10%, PAD3V5V = 1	—	—	12	
				C_L = 50 pF, V_{DD} = 3.3 V ± 10%, PAD3V5V = 1	—	—	25	
				C_L = 100 pF, V_{DD} = 3.3 V ± 10%, PAD3V5V = 1	—	—	40	
W_{FRST}	SR	P	$\overline{\text{RESET}}$ input filtered pulse	—	—	—	40	ns
W_{NFRST}	SR	P	$\overline{\text{RESET}}$ input not filtered pulse	—	1000	—	—	ns
$\|I_{WPU}\|$	CC	P	Weak pull-up current absolute value	V_{DD} = 3.3 V ± 10%, PAD3V5V = 1	10	—	150	µA
		D		V_{DD} = 5.0 V ± 10%, PAD3V5V = 0	10	—	150	
		P		V_{DD} = 5.0 V ± 10%, PAD3V5V = 1[4]	10	—	250	

1. V_{DD} = 3.3 V ± 10% / 5.0 V ± 10%, T_A = –40 to 125 °C, unless otherwise specified.
2. This is a transient configuration during power-up, up to the end of reset PHASE2 (refer to RGM module section of the device reference manual).
3. C_L includes device and package capacitance (C_{PKG} < 5 pF).
4. The configuration PAD3V5 = 1 when V_{DD} = 5 V is only transient configuration during power-up. All pads but RESET and Nexus output (MDOx, EVTO, MCKO) are configured in input or in high impedance state.

Distributor of STMicroelectronics: Excellent Integrated System Limited
Datasheet of SPC560B54L3C6E0Y - IC MCU 32BIT 768KB FLASH 100LQFP
Contact us: sales@integrated-circuit.com Website: www.integrated-circuit.com

4.8 Power management electrical characteristics

4.8.1 Voltage regulator electrical characteristics

The device implements an internal voltage regulator to generate the low voltage core supply V_{DD_LV} from the high voltage ballast supply V_{DD_BV}. The regulator itself is supplied by the common I/O supply V_{DD}. The following supplies are involved:

- HV: High voltage external power supply for voltage regulator module. This must be provided externally through V_{DD} power pin.
- BV: High voltage external power supply for internal ballast module. This must be provided externally through V_{DD_BV} power pin. Voltage values should be aligned with V_{DD}.
- LV: Low voltage internal power supply for core, FMPLL and Flash digital logic. This is generated by the internal voltage regulator but provided outside to connect stability capacitor. It is further split into four main domains to ensure noise isolation between critical LV modules within the device:
  - LV_COR: Low voltage supply for the core. It is also used to provide supply for FMPLL through double bonding.
  - LV_CFLA: Low voltage supply for code flash module. It is supplied with dedicated ballast and shorted to LV_COR through double bonding.
  - LV_DFLA: Low voltage supply for data flash module. It is supplied with dedicated ballast and shorted to LV_COR through double bonding.
  - LV_PLL: Low voltage supply for FMPLL. It is shorted to LV_COR through double bonding.

Figure 9. Voltage regulator capacitance connection

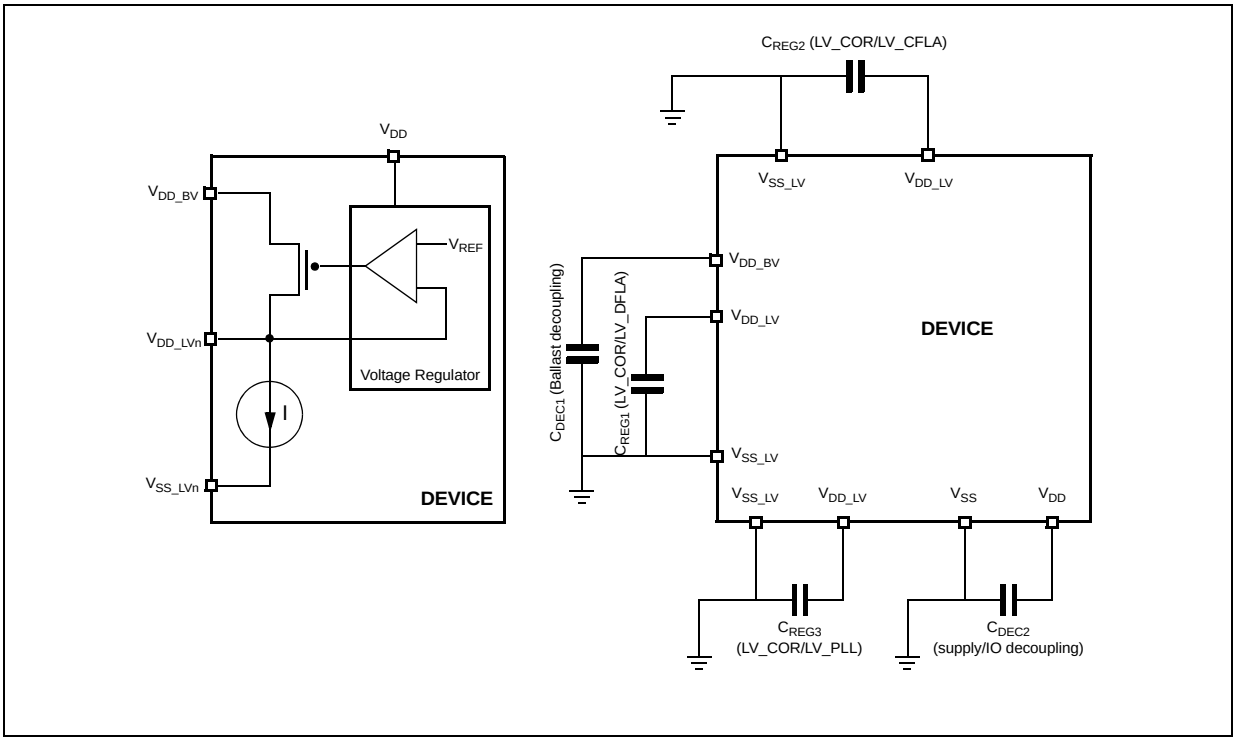

Distributor of STMicroelectronics: Excellent Integrated System Limited
Datasheet of SPC560B54L3C6E0Y - IC MCU 32BIT 768KB FLASH 100LQFP
Contact us: sales@integrated-circuit.com Website: www.integrated-circuit.com

The internal voltage regulator requires external capacitance (C_{REGn}) to be connected to the device in order to provide a stable low voltage digital supply to the device. Capacitances should be placed on the board as near as possible to the associated pins. Care should also be taken to limit the serial inductance of the board to less than 5 nH.

Each decoupling capacitor must be placed between each of the three V_{DD_LV}/V_{SS_LV} supply pairs to ensure stable voltage (see *Section 4.4: Recommended operating conditions*).

Table 26. Voltage regulator electrical characteristics

Symbol		C	Parameter	Conditions[1]	Value			Unit
					Min	Typ	Max	
C_{REGn}	SR	—	Internal voltage regulator external capacitance	—	200	—	500	nF
R_{REG}	SR	—	Stability capacitor equivalent serial resistance	Range: 10 kHz to 20 MHz	—	—	0.2	W
C_{DEC1}	SR	—	Decoupling capacitance[2] ballast	V_{DD_BV}/V_{SS_LV} pair: V_{DD_BV} = 4.5 V to 5.5 V	100[3]	470[4]	—	nF
				V_{DD_BV}/V_{SS_LV} pair: V_{DD_BV} = 3 V to 3.6 V	400		—	
C_{DEC2}	SR	—	Decoupling capacitance regulator supply	V_{DD}/V_{SS} pair	10	100	—	nF
V_{MREG}	CC	T	Main regulator output voltage	Before exiting from reset	—	1.32	—	V
		P		After trimming	1.16	1.28	—	
I_{MREG}	SR	—	Main regulator current provided to V_{DD_LV} domain	—	—	—	150	mA
$I_{MREGINT}$	CC	D	Main regulator module current consumption	I_{MREG} = 200 mA	—	—	2	mA
				I_{MREG} = 0 mA	—	—	1	
V_{LPREG}	CC	P	Low-power regulator output voltage	After trimming	1.16	1.28	—	V
I_{LPREG}	SR	—	Low-power regulator current provided to V_{DD_LV} domain	—	—	—	15	mA
$I_{LPREGINT}$	CC	D	Low-power regulator module current consumption	I_{LPREG} = 15 mA; T_A = 55 °C	—	—	600	µA
		—		I_{LPREG} = 0 mA; T_A = 55 °C	—	5	—	
V_{ULPREG}	CC	P	Ultra low power regulator output voltage	After trimming	1.16	1.28	—	V
I_{ULPREG}	SR	—	Ultra low power regulator current provided to V_{DD_LV} domain	—	—	—	5	mA
$I_{ULPREGINT}$	CC	D	Ultra low power regulator module current consumption	I_{ULPREG} = 5 mA; T_A = 55 °C	—	—	100	µA
				I_{ULPREG} = 0 mA; T_A = 55 °C	—	2	—	
I_{DD_BV}	CC	D	In-rush average current on V_{DD_BV} during power-up[5]	—	—	—	300[6]	mA

Distributor of STMicroelectronics: Excellent Integrated System Limited
Datasheet of SPC560B54L3C6E0Y - IC MCU 32BIT 768KB FLASH 100LQFP
Contact us: sales@integrated-circuit.com Website: www.integrated-circuit.com

1. V_{DD} = 3.3 V ± 10% / 5.0 V ± 10%, T_A = –40 to 125 °C, unless otherwise specified.
2. This capacitance value is driven by the constraints of the external voltage regulator supplying the V_{DD_BV} voltage. A typical value is in the range of 470 nF.
3. This value is acceptable to guarantee operation from 4.5 V to 5.5 V.
4. External regulator and capacitance circuitry must be capable of providing I_{DD_BV} while maintaining supply V_{DD_BV} in operating range.
5. In-rush average current is seen only for short time during power-up and on standby exit (maximum 20 µs, depending on external capacitances to be loaded).
6. The duration of the in-rush current depends on the capacitance placed on LV pins. BV decoupling capacitors must be sized accordingly. Refer to I_{MREG} value for minimum amount of current to be provided in cc.

4.8.2 Low voltage detector electrical characteristics

The device implements a power-on reset (POR) module to ensure correct power-up initialization, as well as five low voltage detectors (LVDs) to monitor the V_{DD} and the V_{DD_LV} voltage while device is supplied:

- POR monitors V_{DD} during the power-up phase to ensure device is maintained in a safe reset state (refer to RGM Destructive Event Status (RGM_DES) Register flag F_POR in device reference manual)
- LVDHV3 monitors V_{DD} to ensure device reset below minimum functional supply (refer to RGM Destructive Event Status (RGM_DES) Register flag F_LVD27 in device reference manual)
- LVDHV3B monitors V_{DD_BV} to ensure device reset below minimum functional supply (refer to RGM Destructive Event Status (RGM_DES) Register flag F_LVD27_VREG in device reference manual)
- LVDHV5 monitors V_{DD} when application uses device in the 5.0 V ± 10% range (refer to RGM Functional Event Status (RGM_FES) Register flag F_LVD45 in device reference manual)
- LVDLVCOR monitors power domain No. 1 (refer to RGM Destructive Event Status (RGM_DES) Register flag F_LVD12_PD1 in device reference manual)
- LVDLVBKP monitors power domain No. 0 (refer to RGM Destructive Event Status (RGM_DES) Register flag F_LVD12_PD0 in device reference manual)

Note: When enabled, power domain No. 2 is monitored through LVDLVBKP.

Distributor of STMicroelectronics: Excellent Integrated System Limited
Datasheet of SPC560B54L3C6E0Y - IC MCU 32BIT 768KB FLASH 100LQFP
Contact us: sales@integrated-circuit.com Website: www.integrated-circuit.com

Figure 10. Low voltage detector vs reset

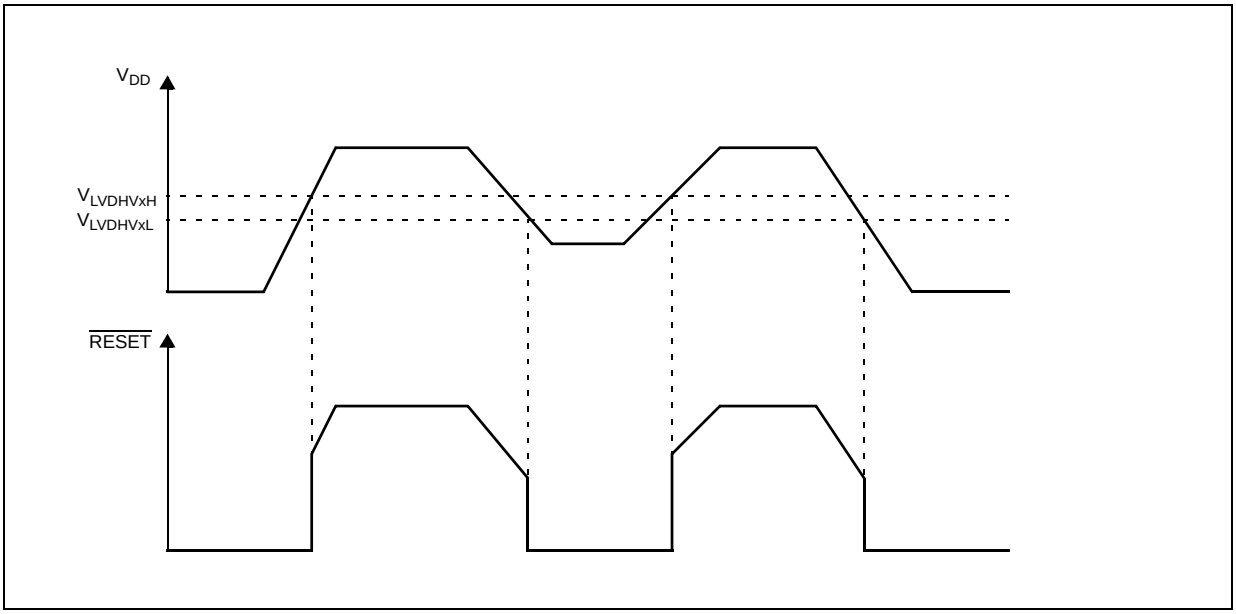

Table 27. Low voltage detector electrical characteristics

Symbol		C	Parameter	Conditions[1]	Value			Unit
					Min	Typ	Max	
V_{PORUP}	SR	P	Supply for functional POR module	T_A = 25 °C, after trimming	1.0	—	5.5	V
V_{PORH}	CC	P	Power-on reset threshold		1.5	—	2.6	
$V_{LVDHV3H}$	CC	T	LVDHV3 low voltage detector high threshold		—	—	2.95	
$V_{LVDHV3L}$	CC	P	LVDHV3 low voltage detector low threshold		2.6	—	2.9	
$V_{LVDHV3BH}$	CC	P	LVDHV3B low voltage detector high threshold		—	—	2.95	
$V_{LVDHV3BL}$	CC	P	LVDHV3B low voltage detector low threshold		2.6	—	2.9	
$V_{LVDHV5H}$	CC	T	LVDHV5 low voltage detector high threshold		—	—	4.5	
$V_{LVDHV5L}$	CC	P	LVDHV5 low voltage detector low threshold		3.8	—	4.4	
$V_{LVDLVCORL}$	CC	P	LVDLVCOR low voltage detector low threshold		1.08	—	1.16	
$V_{LVDLVBKPL}$	CC	P	LVDLVBKP low voltage detector low threshold		1.08	—	1.16	

1. V_{DD} = 3.3 V ± 10% / 5.0 V ± 10%, T_A = –40 to 125 °C, unless otherwise specified.

4.9 Power consumption

Table 28 provides DC electrical characteristics for significant application modes. These values are indicative values; actual consumption depends on the application.

Distributor of STMicroelectronics: Excellent Integrated System Limited
Datasheet of SPC560B54L3C6E0Y - IC MCU 32BIT 768KB FLASH 100LQFP
Contact us: sales@integrated-circuit.com Website: www.integrated-circuit.com

Table 28. Power consumption on VDD_BV and VDD_HV

Symbol		C	Parameter	Conditions(1)		Value			Unit
						Min	Typ	Max	
I_{DDMAX}(2)	CC	D	RUN mode maximum average current	—		—	115	140(3)	mA
I_{DDRUN}(4)	CC	T	RUN mode typical average current(5)	f_{CPU} = 8 MHz		—	12	—	mA
		T		f_{CPU} = 16 MHz		—	27	—	
		T		f_{CPU} = 32 MHz		—	43	—	
		P		f_{CPU} = 48 MHz		—	56	100	
		P		f_{CPU} = 64 MHz		—	70	125	
I_{DDHALT}	CC	C	HALT mode current(6)	Slow internal RC oscillator (128 kHz) running	T_A = 25 °C	—	10	18	mA
		P			T_A = 125 °C	—	17	28	
I_{DDSTOP}	CC	P	STOP mode current(7)	Slow internal RC oscillator (128 kHz) running	T_A = 25 °C	—	350	900(8)	µA
		D			T_A = 55 °C	—	750	—	
		D			T_A = 85 °C	—	2	7	mA
		D			T_A = 105 °C	—	4	10	
		P			T_A = 125 °C	—	7	14	
$I_{DDSTDBY2}$	CC	P	STANDBY2 mode current(9)	Slow internal RC oscillator (128 kHz) running	T_A = 25 °C	—	30	100	µA
		D			T_A = 55 °C	—	75	—	
		D			T_A = 85 °C	—	180	700	
		D			T_A = 105 °C	—	315	1000	
		P			T_A = 125 °C	—	560	1700	
$I_{DDSTDBY1}$	CC	T	STANDBY1 mode current(10)	Slow internal RC oscillator (128 kHz) running	T_A = 25 °C	—	20	60	µA
		D			T_A = 55 °C	—	45	—	
		D			T_A = 85 °C	—	100	350	
		D			T_A = 105 °C	—	165	500	
		D			T_A = 125 °C	—	280	900	

1. V_{DD} = 3.3 V ± 10% / 5.0 V ± 10%, T_A = –40 to 125 °C, unless otherwise specified.
2. I_{DDMAX} is drawn only from the VDD_BV pin. Running consumption does not include I/Os toggling which is highly dependent on the application. The given value is thought to be a worst case value with all peripherals running, and code fetched from code flash while modify operation ongoing on data flash. Notice that this value can be significantly reduced by application: switch off not used peripherals (default), reduce peripheral frequency through internal prescaler, fetch from RAM most used functions, use low power mode when possible.
3. Higher current may be sunk by device during power-up and standby exit. Please refer to in-rush average current in *Table 26*.
4. I_{DDRUN} is drawn only from the VDD_BV pin. RUN current measured with typical application with accesses on both Flash and RAM.
5. Only for the “P” classification: Data and Code Flash in Normal Power. Code fetched from RAM: Serial IPs CAN and LIN in loop back mode, DSPI as Master, PLL as system clock (4 x Multiplier) peripherals on (eMIOS/CTU/ADC) and running at max frequency, periodic SW/WDG timer reset enabled.

Distributor of STMicroelectronics: Excellent Integrated System Limited
Datasheet of SPC560B54L3C6E0Y - IC MCU 32BIT 768KB FLASH 100LQFP
Contact us: sales@integrated-circuit.com Website: www.integrated-circuit.com

6. Data Flash Power Down. Code Flash in Low Power. SIRC 128 kHz and FIRC 16 MHz on. 10 MHz XTAL clock. FlexCAN: instances: 0, 1, 2 ON (clocked but not reception or transmission), instances: 4, 5, 6 clocks gated. LINFlex: instances: 0, 1, 2 ON (clocked but not reception or transmission), instance: 3 to 9 clocks gated. eMIOS: instance: 0 ON (16 channels on PA[0]–PA[11] and PC[12]–PC[15]) with PWM 20 kHz, instance: 1 clock gated. DSPI: instance: 0 (clocked but no communication), instance: 1 to 5 clocks gated. RTC/API ON. PIT ON. STM ON. ADC1 OFF. ADC0 ON but no conversion except two analog watchdogs.
7. Only for the “P” classification: No clock, FIRC 16 MHz off, SIRC 128 kHz on, PLL off, HPVreg off, ULPVreg/LPVreg on. All possible peripherals off and clock gated. Flash in power down mode.
8. When going from RUN to STOP mode and the core consumption is > 6 mA, it is normal operation for the main regulator module to be kept on by the on-chip current monitoring circuit. This is most likely to occur with junction temperatures exceeding 125 °C and under these circumstances, it is possible for the current to initially exceed the maximum STOP specification by up to 2 mA. After entering stop, the application junction temperature will reduce to the ambient level and the main regulator will be automatically switched off when the load current is below 6 mA.
9. Only for the “P” classification: ULPreg on, HP/LPVreg off, 32 KB RAM on, device configured for minimum consumption, all possible modules switched off.
10. ULPreg on, HP/LPVreg off, 8 KB RAM on, device configured for minimum consumption, all possible modules switched off.

4.10 Flash memory electrical characteristics

4.10.1 Program/erase characteristics

Table 29 shows the program and erase characteristics.

Table 29. Program and erase specifications

Symbol		C	Parameter	Conditions	Value				Unit
					Min	Typ (1)	Initial max (2)	Max (3)	
$t_{dwprogram}$	CC	C	Double word (64 bits) program time(4)	Code Flash	—	18	50	500	µs
				Data Flash		22			
$t_{16Kpperase}$			16 KB block preprogram and erase time	Code Flash	—	200	500	5000	ms
				Data Flash		300			
$t_{32Kpperase}$			32 KB block preprogram and erase time	Code Flash	—	300	600	5000	ms
				Data Flash		400			
$t_{128Kpperase}$			128 KB block preprogram and erase time	Code Flash	—	600	1300	7500	ms
				Data Flash		800			
t_{esus}		D	Erase Suspend Latency	—	—	—	30	30	µs
t_{ESRT}		C	Erase Suspend Request Rate(5)	Code Flash	20	—	—	—	ms
				Data Flash	10	—	—	—	

1. Typical program and erase times assume nominal supply values and operation at 25 °C. All times are subject to change pending device characterization.
2. Initial factory condition: < 100 program/erase cycles, 25 °C, typical supply voltage.
3. The maximum program and erase times occur after the specified number of program/erase cycles. These maximum values are characterized but not guaranteed.
4. Actual hardware programming times. This does not include software overhead.
5. Time between erase suspend resume and the next erase suspend request.

Distributor of STMicroelectronics: Excellent Integrated System Limited
Datasheet of SPC560B54L3C6E0Y - IC MCU 32BIT 768KB FLASH 100LQFP
Contact us: sales@integrated-circuit.com Website: www.integrated-circuit.com

Table 30. Flash module life

Symbol		C	Parameter	Conditions	Value			Unit
					Min	Typ	Max	
P/E	CC	C	Number of program/erase cycles per block for 16 KB blocks over the operating temperature range (T_J)	—	100000	—	—	cycles
P/E	CC	C	Number of program/erase cycles per block for 32 KB blocks over the operating temperature range (T_J)	—	10000	100000	—	cycles
P/E	CC	C	Number of program/erase cycles per block for 128 KB blocks over the operating temperature range (T_J)	—	1000	100000	—	cycles
Retention	CC	C	Minimum data retention at 85 °C average ambient temperature(1)	Blocks with 0–1000 P/E cycles	20	—	—	years
				Blocks with 1001–10000 P/E cycles	10	—	—	years
				Blocks with 10001–100000 P/E cycles	5	—	—	years

1. Ambient temperature averaged over duration of application, not to exceed recommended product operating temperature range.

ECC circuitry provides correction of single bit faults and is used to improve further automotive reliability results. Some units will experience single bit corrections throughout the life of the product with no impact to product reliability.

Table 31. Flash read access timing

Symbol		C	Parameter	Conditions(1)	Max	Unit
f_{READ}	CC	P	Maximum frequency for Flash reading	2 wait states	64	MHz
		C		1 wait state	40	
		C		0 wait states	20	

1. V_{DD} = 3.3 V ± 10% / 5.0 V ± 10%, T_A = –40 to 125 °C, unless otherwise specified.

4.10.2 Flash power supply DC characteristics

Table 32 shows the power supply DC characteristics on external supply.

Distributor of STMicroelectronics: Excellent Integrated System Limited
Datasheet of SPC560B54L3C6E0Y - IC MCU 32BIT 768KB FLASH 100LQFP
Contact us: sales@integrated-circuit.com Website: www.integrated-circuit.com

Table 32. Flash power supply DC electrical characteristics

Symbol		Parameter	Conditions[1]		Value			Unit
					Min	Typ	Max	
I_{CFREAD}	CC	Sum of the current consumption on V_{DD_HV} and V_{DD_BV} on read access	Flash module read f_{CPU} = 64 MHz	Code Flash	—	—	33	mA
I_{DFREAD}				Data Flash	—	—	33	
I_{CFMOD}	CC	Sum of the current consumption on V_{DD_HV} and V_{DD_BV} on matrix modification (program/erase)	Program/Erase on-going while reading Flash registers f_{CPU} = 64 MHz	Code Flash	—	—	52	mA
I_{DFMOD}				Data Flash	—	—	33	
I_{CFLPW}	CC	Sum of the current consumption on V_{DD_HV} and V_{DD_BV} during Flash low power mode	—	Code Flash	—	—	1.1	mA
I_{DFLPW}				Data Flash	—	—	900	µA
I_{CFPWD}	CC	Sum of the current consumption on V_{DD_HV} and V_{DD_BV} during Flash power down mode	—	Code Flash	—	—	150	µA
I_{DFPWD}				Data Flash	—	—	150	

1. V_{DD} = 3.3 V ± 10% / 5.0 V ± 10%, T_A = –40 to 125 °C, unless otherwise specified.

4.10.3 Start-up/Switch-off timings

Table 33. Start-up time/Switch-off time

Symbol		C	Parameter	Conditions[1]	Value			Unit
					Min	Typ	Max	
$t_{FLARSTEXIT}$	CC	T	Delay for Flash module to exit reset mode	—	—	—	125	µs
$t_{FLALPEXIT}$	CC	T	Delay for Flash module to exit low-power mode	—	—	—	0.5	
$t_{FLAPDEXIT}$	CC	T	Delay for Flash module to exit power-down mode	—	—	—	30	
$t_{FLALPENTRY}$	CC	T	Delay for Flash module to enter low-power mode	—	—	—	0.5	
$t_{FLAPDENTRY}$	CC	T	Delay for Flash module to enter power-down mode	—	—	—	1.5	

1. V_{DD} = 3.3 V ± 10% / 5.0 V ± 10%, T_A = –40 to 125 °C, unless otherwise specified.

4.11 Electromagnetic compatibility (EMC) characteristics

Susceptibility tests are performed on a sample basis during product characterization.

4.11.1 Designing hardened software to avoid noise problems

EMC characterization and optimization are performed at component level with a typical application environment and simplified MCU software. It should be noted that good EMC performance is highly dependent on the user application and the software in particular.

Distributor of STMicroelectronics: Excellent Integrated System Limited
Datasheet of SPC560B54L3C6E0Y - IC MCU 32BIT 768KB FLASH 100LQFP
Contact us: sales@integrated-circuit.com Website: www.integrated-circuit.com

Therefore it is recommended that the user apply EMC software optimization and prequalification tests in relation with the EMC level requested for the application.

- Software recommendations – The software flowchart must include the management of runaway conditions such as:
  - Corrupted program counter
  - Unexpected reset
  - Critical data corruption (control registers...)
- Prequalification trials – Most of the common failures (unexpected reset and program counter corruption) can be reproduced by manually forcing a low state on the reset pin or the oscillator pins for 1 second.

  To complete these trials, ESD stress can be applied directly on the device. When unexpected behavior is detected, the software can be hardened to prevent unrecoverable errors occurring (see application note *Software Techniques For Improving Microcontroller EMC Performance* (AN1015)).

4.11.2 Electromagnetic interference (EMI)

The product is monitored in terms of emission based on a typical application. This emission test conforms to the IEC61967-1 standard, which specifies the general conditions for EMI measurements.

Table 34. EMI radiated emission measurement(1)(2)

Symbol		C	Parameter	Conditions		Value			Unit
						Min	Typ	Max	
—	SR	—	Scan range	—		0.150		1000	MHz
f_{CPU}	SR	—	Operating frequency	—		—	64	—	MHz
V_{DD_LV}	SR	—	LV operating voltages	—		—	1.28	—	V
S_{EMI}	CC	T	Peak level	V_{DD} = 5 V, T_A = 25 °C, LQFP144 package Test conforming to IEC 61967-2, f_{OSC} = 8 MHz/f_{CPU} = 64 MHz	No PLL frequency modulation	—	—	18	dBµV
					± 2% PLL frequency modulation	—	—	14	dBµV

1. EMI testing and I/O port waveforms per IEC 61967-1, -2, -4.
2. For information on conducted emission and susceptibility measurement (norm IEC 61967-4), please contact your local marketing representative.

4.11.3 Absolute maximum ratings (electrical sensitivity)

Based on two different tests (ESD and LU) using specific measurement methods, the product is stressed in order to determine its performance in terms of electrical sensitivity.

Distributor of STMicroelectronics: Excellent Integrated System Limited
Datasheet of SPC560B54L3C6E0Y - IC MCU 32BIT 768KB FLASH 100LQFP
Contact us: sales@integrated-circuit.com Website: www.integrated-circuit.com

4.11.3.1 Electrostatic discharge (ESD)

Electrostatic discharges (a positive then a negative pulse separated by 1 second) are applied to the pins of each sample according to each pin combination. The sample size depends on the number of supply pins in the device (3 parts×(n + 1) supply pin). This test conforms to the AEC-Q100-002/-003/-011 standard. For more details, refer to the application note *Electrostatic Discharge Sensitivity Measurement* (AN1181).

Table 35. ESD absolute maximum ratings(1)(2)

Symbol	Ratings	Conditions	Class	Max value(3)	Unit
$V_{ESD(HBM)}$	Electrostatic discharge voltage (Human Body Model)	T_A = 25 °C conforming to AEC-Q100-002	H1C	2000	V
$V_{ESD(MM)}$	Electrostatic discharge voltage (Machine Model)	T_A = 25 °C conforming to AEC-Q100-003	M2	200	
$V_{ESD(CDM)}$	Electrostatic discharge voltage (Charged Device Model)	T_A = 25 °C conforming to AEC-Q100-011	C3A	500	
				750 (corners)	

1. All ESD testing is in conformity with CDF-AEC-Q100 Stress Test Qualification for Automotive Grade Integrated Circuits.
2. A device will be defined as a failure if after exposure to ESD pulses the device no longer meets the device specification requirements. Complete DC parametric and functional testing shall be performed per applicable device specification at room temperature followed by hot temperature, unless specified otherwise in the device specification.
3. Data based on characterization results, not tested in production

4.11.3.2 Static latch-up (LU)

Two complementary static tests are required on six parts to assess the latch-up performance:

- A supply overvoltage is applied to each power supply pin.
- A current injection is applied to each input, output and configurable I/O pin.

These tests are compliant with the EIA/JESD 78 IC latch-up standard.

Table 36. Latch-up results

Symbol	Parameter	Conditions	Class
LU	Static latch-up class	T_A = 125 °C conforming to JESD 78	II level A

4.12 Fast external crystal oscillator (4 to 16 MHz) electrical characteristics

The device provides an oscillator/resonator driver. *Figure 11* describes a simple model of the internal oscillator driver and provides an example of a connection for an oscillator or a resonator.

Table 37 provides the parameter description of 4 MHz to 16 MHz crystals used for the design simulations.

Distributor of STMicroelectronics: Excellent Integrated System Limited
Datasheet of SPC560B54L3C6E0Y - IC MCU 32BIT 768KB FLASH 100LQFP
Contact us: sales@integrated-circuit.com Website: www.integrated-circuit.com

Figure 11. Crystal oscillator and resonator connection scheme

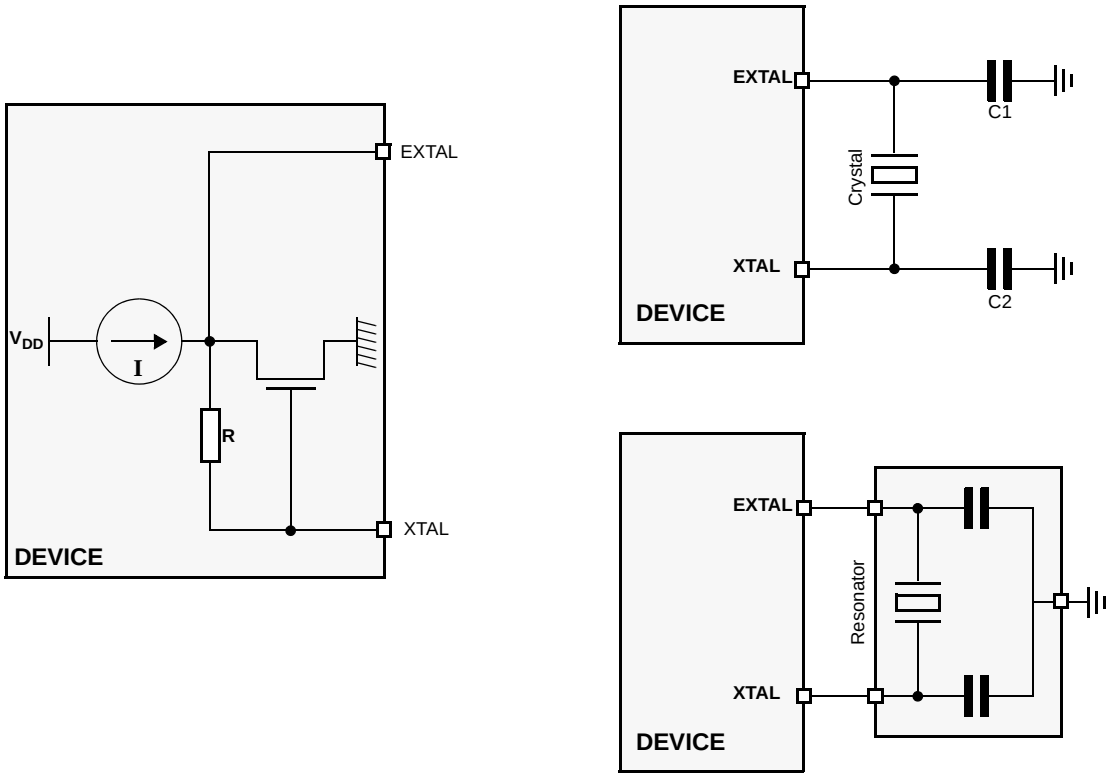

Notes:
1. XTAL/EXTAL must not be directly used to drive external circuits
2. A series resistor may be required, according to crystal oscillator supplier recommendations.

Table 37. Crystal description

Nominal frequency (MHz)	NDK crystal reference	Crystal equivalent series resistance ESR Ω	Crystal motional capacitance (C_m) fF	Crystal motional inductance (L_m) mH	Load on xtalin/xtalout C1 = C2 (pF)(1)	Shunt capacitance between xtalout and xtalin C0(2) (pF)
4	NX8045GB	300	2.68	591.0	21	2.93
8	NX5032GA	300	2.46	160.7	17	3.01
10		150	2.93	86.6	15	2.91
12		120	3.11	56.5	15	2.93
16		120	3.90	25.3	10	3.00

1. The values specified for C1 and C2 are the same as used in simulations. It should be ensured that the testing includes all the parasitics (from the board, probe, crystal, etc.) as the AC / transient behavior depends upon them.
2. The value of C0 specified here includes 2 pF additional capacitance for parasitics (to be seen with bond-pads, package, etc.).

Distributor of STMicroelectronics: Excellent Integrated System Limited
Datasheet of SPC560B54L3C6E0Y - IC MCU 32BIT 768KB FLASH 100LQFP
Contact us: sales@integrated-circuit.com Website: www.integrated-circuit.com

Figure 12. Fast external crystal oscillator (4 to 16 MHz) timing diagram

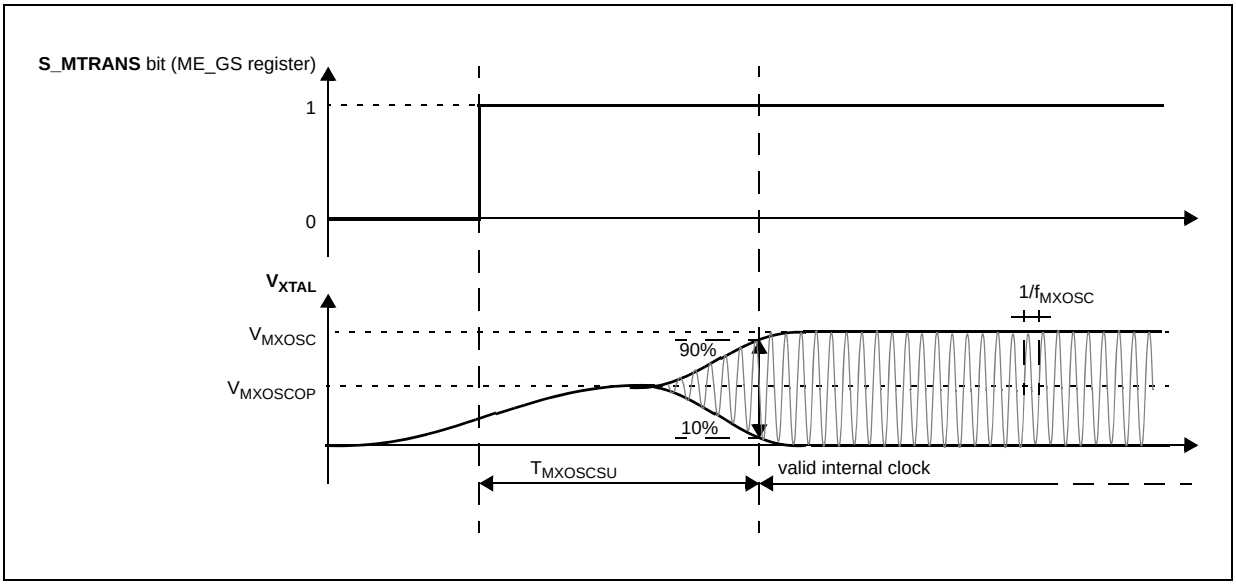

Table 38. Fast external crystal oscillator (4 to 16 MHz) electrical characteristics

Symbol		C	Parameter	Conditions[1]	Value			Unit
					Min	Typ	Max	
f_{FXOSC}	SR	—	Fast external crystal oscillator frequency	—	4.0	—	16.0	MHz
g_{mFXOSC}	CC	C	Fast external crystal oscillator transconductance	V_{DD} = 3.3 V ± 10%, PAD3V5V = 1 OSCILLATOR_MARGIN = 0	2.2	—	8.2	mA/V
	CC	P		V_{DD} = 5.0 V ± 10%, PAD3V5V = 0 OSCILLATOR_MARGIN = 0	2.0	—	7.4	
	CC	C		V_{DD} = 3.3 V ± 10%, PAD3V5V = 1 OSCILLATOR_MARGIN = 1	2.7	—	9.7	
	CC	C		V_{DD} = 5.0 V ± 10%, PAD3V5V = 0 OSCILLATOR_MARGIN = 1	2.5	—	9.2	
V_{FXOSC}	CC	T	Oscillation amplitude at EXTAL	f_{OSC} = 4 MHz, OSCILLATOR_MARGIN = 0	1.3	—	—	V
				f_{OSC} = 16 MHz, OSCILLATOR_MARGIN = 1	1.3	—	—	
$V_{FXOSCOP}$	CC	C	Oscillation operating point	—	—	0.95	—	V

Distributor of STMicroelectronics: Excellent Integrated System Limited
Datasheet of SPC560B54L3C6E0Y - IC MCU 32BIT 768KB FLASH 100LQFP
Contact us: sales@integrated-circuit.com Website: www.integrated-circuit.com

Table 38. Fast external crystal oscillator (4 to 16 MHz) electrical characteristics (continued)

Symbol		C	Parameter	Conditions[1]	Value			Unit
					Min	Typ	Max	
I_{FXOSC}[2]	CC	T	Fast external crystal oscillator consumption	—	—	2	3	mA
$t_{FXOSCSU}$	CC	T	Fast external crystal oscillator start-up time	f_{OSC} = 4 MHz, OSCILLATOR_MARGIN = 0	—	—	6	ms
				f_{OSC} = 16 MHz, OSCILLATOR_MARGIN = 1	—	—	1.8	
V_{IH}	SR	P	Input high level CMOS (Schmitt Trigger)	Oscillator bypass mode	$0.65V_{DD}$	—	V_{DD} + 0.4	V
V_{IL}	SR	P	Input low level CMOS (Schmitt Trigger)	Oscillator bypass mode	–0.4	—	$0.35V_{DD}$	V

1. V_{DD} = 3.3 V ± 10% / 5.0 V ± 10%, T_A = –40 to 125 °C, unless otherwise specified.
2. Stated values take into account only analog module consumption but not the digital contributor (clock tree and enabled peripherals).

4.13 Slow external crystal oscillator (32 kHz) electrical characteristics

The device provides a low power oscillator/resonator driver.

Figure 13. Crystal oscillator and resonator connection scheme

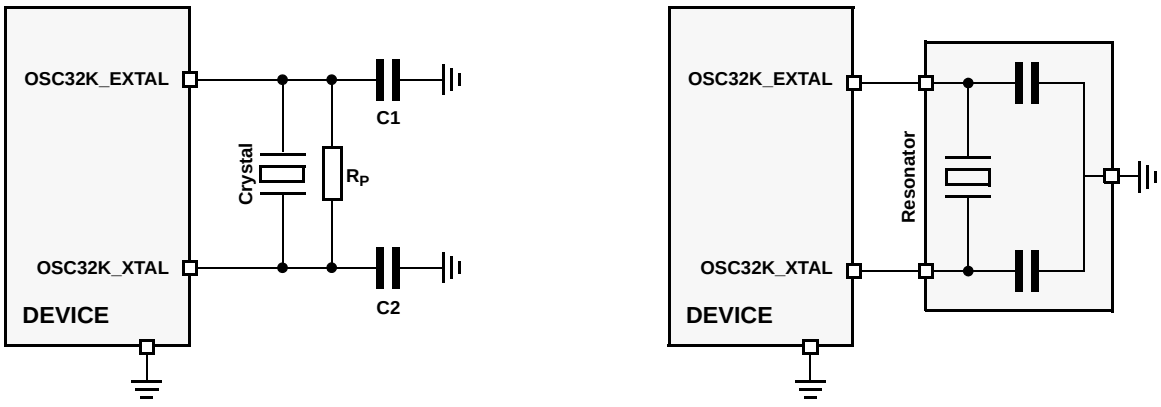

Note: OSC32_XTAL/OSC32_EXTAL must not be directly used to drive external circuits

Distributor of STMicroelectronics: Excellent Integrated System Limited
Datasheet of SPC560B54L3C6E0Y - IC MCU 32BIT 768KB FLASH 100LQFP
Contact us: sales@integrated-circuit.com Website: www.integrated-circuit.com

Figure 14. Equivalent circuit of a quartz crystal

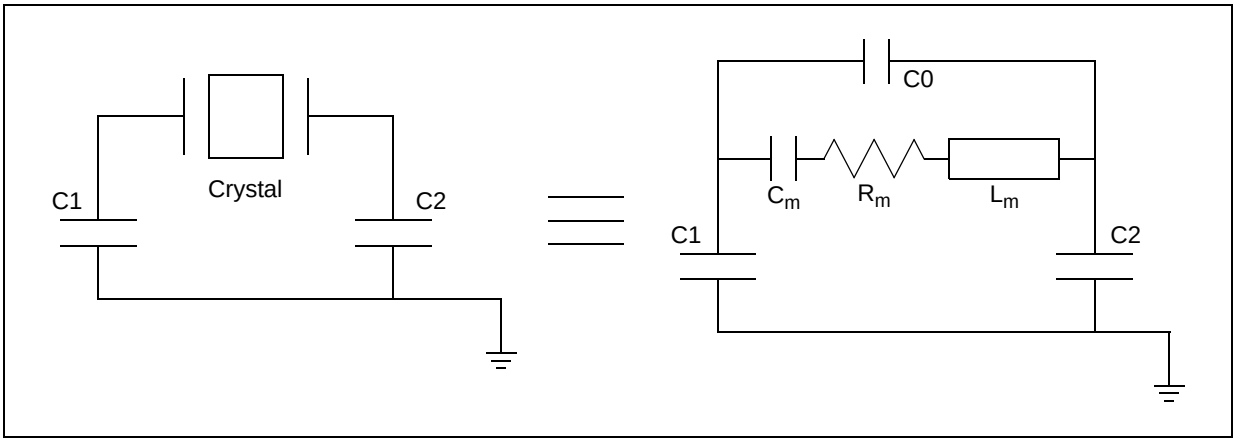

Table 39. Crystal motional characteristics(1)

Symbol	Parameter	Conditions	Value			Unit
			Min	Typ	Max	
L_m	Motional inductance	—	—	11.796	—	KH
C_m	Motional capacitance	—	—	2	—	fF
C1/C2	Load capacitance at OSC32K_XTAL and OSC32K_EXTAL with respect to ground(2)	—	18	—	28	pF
R_m(3)	Motional resistance	AC coupled at C0 = 2.85 pF(4)	—	—	65	kW
		AC coupled at C0 = 4.9 pF(4)	—	—	50	
		AC coupled at C0 = 7.0 pF(4)	—	—	35	
		AC coupled at C0 = 9.0 pF(4)	—	—	30	

1. The crystal used is Epson Toyocom MC306.
2. This is the recommended range of load capacitance at OSC32K_XTAL and OSC32K_EXTAL with respect to ground. It includes all the parasitics due to board traces, crystal and package.
3. Maximum ESR (R_m) of the crystal is 50 kΩ.
4. C0 Includes a parasitic capacitance of 2.0 pF between OSC32K_XTAL and OSC32K_EXTAL pins.

Distributor of STMicroelectronics: Excellent Integrated System Limited
Datasheet of SPC560B54L3C6E0Y - IC MCU 32BIT 768KB FLASH 100LQFP
Contact us: sales@integrated-circuit.com Website: www.integrated-circuit.com

Figure 15. Slow external crystal oscillator (32 kHz) timing diagram

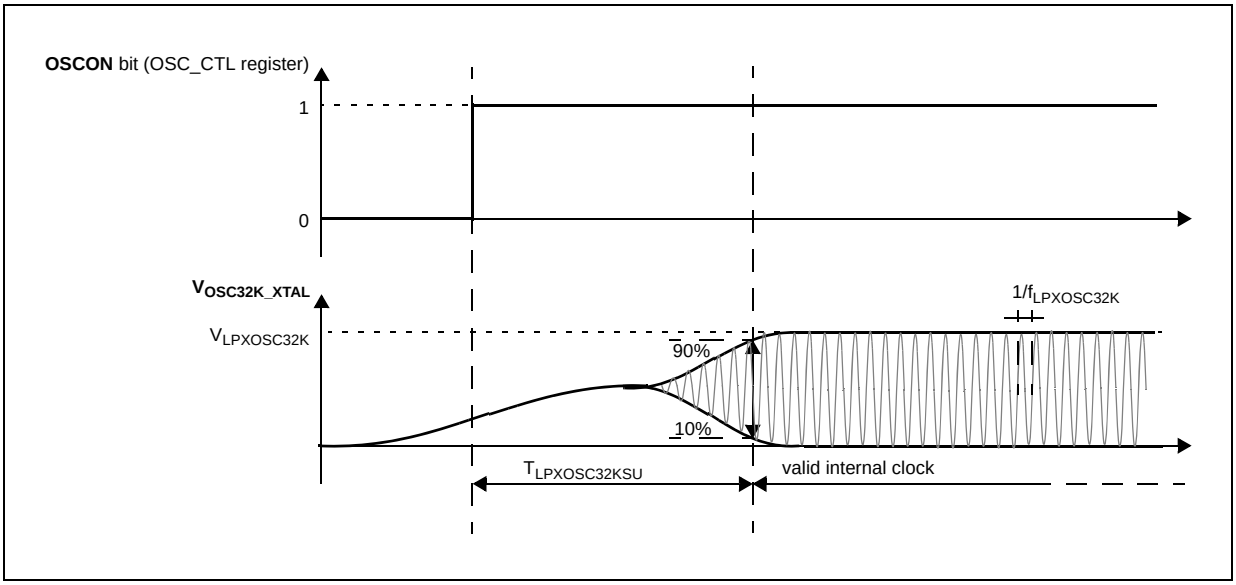

Table 40. Slow external crystal oscillator (32 kHz) electrical characteristics

Symbol		C	Parameter	Conditions[1]	Value			Unit
					Min	Typ	Max	
f_{SXOSC}	SR	—	Slow external crystal oscillator frequency	—	32	32.768	40	kHz
V_{SXOSC}	CC	T	Oscillation amplitude	—	—	2.1	—	V
$I_{SXOSCBIAS}$	CC	T	Oscillation bias current	—		2.5		µA
I_{SXOSC}	CC	T	Slow external crystal oscillator consumption	—	—	—	8	µA
$t_{SXOSCSU}$	CC	T	Slow external crystal oscillator start-up time	—	—	—	2[2]	s

1. V_{DD} = 3.3 V ± 10% / 5.0 V ± 10%, T_A = –40 to 125 °C, unless otherwise specified. Values are specified for no neighbor GPIO pin activity. If oscillator is enabled (OSC32K_XTAL and OSC32K_EXTAL pins), neighboring pins should not toggle.
2. Start-up time has been measured with EPSON TOYOCOM MC306 crystal. Variation may be seen with other crystal.

4.14 FMPLL electrical characteristics

The device provides a frequency modulated phase locked loop (FMPLL) module to generate a fast system clock from the main oscillator driver.

Distributor of STMicroelectronics: Excellent Integrated System Limited
Datasheet of SPC560B54L3C6E0Y - IC MCU 32BIT 768KB FLASH 100LQFP
Contact us: sales@integrated-circuit.com Website: www.integrated-circuit.com

Table 41. FMPLL electrical characteristics

Symbol		C	Parameter	Conditions[1]	Value			Unit
					Min	Typ	Max	
f_{PLLIN}	SR	—	FMPLL reference clock[2]	—	4	—	64	MHz
Δ_{PLLIN}	SR	—	FMPLL reference clock duty cycle[2]	—	40	—	60	%
f_{PLLOUT}	CC	P	FMPLL output clock frequency	—	16	—	64	MHz
f_{VCO}[3]	CC	P	VCO frequency without frequency modulation	—	256	—	512	MHz
		P	VCO frequency with frequency modulation	—	245.76	—	532.48	
f_{CPU}	SR	—	System clock frequency	—	—	—	64	MHz
f_{FREE}	CC	P	Free-running frequency	—	20	—	150	MHz
t_{LOCK}	CC	P	FMPLL lock time	Stable oscillator (f_{PLLIN} = 16 MHz)		40	100	µs
Δt_{STJIT}	CC	—	FMPLL short term jitter[4]	f_{sys} maximum	–4	—	4	%
Δt_{LTJIT}	CC	—	FMPLL long term jitter	f_{PLLCLK} at 64 MHz, 4000 cycles	—	—	10	ns
I_{PLL}	CC	C	FMPLL consumption	T_A = 25 °C	—	—	4	mA

1. V_{DD} = 3.3 V ± 10% / 5.0 V ± 10%, T_A = –40 to 125 °C, unless otherwise specified
2. PLLIN clock retrieved directly from FXOSC clock. Input characteristics are granted when oscillator is used in functional mode. When bypass mode is used, oscillator input clock should verify f_{PLLIN} and Δ_{PLLIN}.
3. Frequency modulation is considered ± 4%.
4. Short term jitter is measured on the clock rising edge at cycle n and n+4.

4.15 Fast internal RC oscillator (16 MHz) electrical characteristics

The device provides a 16 MHz main internal RC oscillator. This is used as the default clock at the power-up of the device.

Table 42. Fast internal RC oscillator (16 MHz) electrical characteristics

Symbol		C	Parameter	Conditions[1]	Value			Unit
					Min	Typ	Max	
f_{FIRC}	CC	P	Fast internal RC oscillator high frequency	T_A = 25 °C, trimmed	—	16	—	MHz
	SR	—		—	12		20	
$I_{FIRCRUN}$[2]	CC	T	Fast internal RC oscillator high frequency current in running mode	T_A = 25 °C, trimmed	—	—	200	µA
$I_{FIRCPWD}$	CC	D	Fast internal RC oscillator high frequency current in power down mode	T_A = 25 °C	—	—	10	µA

Distributor of STMicroelectronics: Excellent Integrated System Limited
Datasheet of SPC560B54L3C6E0Y - IC MCU 32BIT 768KB FLASH 100LQFP
Contact us: sales@integrated-circuit.com Website: www.integrated-circuit.com

Table 42. Fast internal RC oscillator (16 MHz) electrical characteristics (continued)

Symbol		C	Parameter	Conditions[1]		Value			Unit
						Min	Typ	Max	
$I_{FIRCSTOP}$	CC	T	Fast internal RC oscillator high frequency and system clock current in stop mode	T_A = 25 °C	sysclk = off	—	500	—	µA
					sysclk = 2 MHz	—	600	—	
					sysclk = 4 MHz	—	700	—	
					sysclk = 8 MHz	—	900	—	
					sysclk = 16 MHz	—	1250	—	
t_{FIRCSU}	CC	C	Fast internal RC oscillator start-up time	V_{DD} = 5.0 V ± 10%		—	1.1	2.0	µs
$\Delta_{FIRCPRE}$	CC	C	Fast internal RC oscillator precision after software trimming of f_{FIRC}	T_A = 25 °C		–1	—	1	%
$\Delta_{FIRCTRIM}$	CC	C	Fast internal RC oscillator trimming step	T_A = 25 °C		—	1.6		%
$\Delta_{FIRCVAR}$	CC	C	Fast internal RC oscillator variation over temperature and supply with respect to f_{FIRC} at T_A = 25 °C in high-frequency configuration	—		–5	—	5	%

1. V_{DD} = 3.3 V ± 10% / 5.0 V ± 10%, T_A = –40 to 125 °C, unless otherwise specified.
2. This does not include consumption linked to clock tree toggling and peripherals consumption when RC oscillator is ON.

4.16 Slow internal RC oscillator (128 kHz) electrical characteristics

The device provides a 128 kHz low power internal RC oscillator. This can be used as the reference clock for the RTC module.

Table 43. Slow internal RC oscillator (128 kHz) electrical characteristics

Symbol		C	Parameter	Conditions[1]	Value			Unit
					Min	Typ	Max	
f_{SIRC}	CC	P	Slow internal RC oscillator low frequency	T_A = 25 °C, trimmed	—	128	—	kHz
	SR	—		—	100	—	150	
I_{SIRC}[2]	CC	C	Slow internal RC oscillator low frequency current	T_A = 25 °C, trimmed	—	—	5	µA
t_{SIRCSU}	CC	P	Slow internal RC oscillator start-up time	T_A = 25 °C, V_{DD} = 5.0 V ± 10%	—	8	12	µs

Distributor of STMicroelectronics: Excellent Integrated System Limited
Datasheet of SPC560B54L3C6E0Y - IC MCU 32BIT 768KB FLASH 100LQFP
Contact us: sales@integrated-circuit.com Website: www.integrated-circuit.com

Table 43. Slow internal RC oscillator (128 kHz) electrical characteristics (continued)

Symbol		C	Parameter	Conditions[1]	Value			Unit
					Min	Typ	Max	
$\Delta_{SIRCPRE}$	CC	C	Slow internal RC oscillator precision after software trimming of f_{SIRC}	T_A = 25 °C	–2	—	2	%
$\Delta_{SIRCTRIM}$	CC	C	Slow internal RC oscillator trimming step	—	—	2.7	—	
$\Delta_{SIRCVAR}$	CC	C	Slow internal RC oscillator variation in temperature and supply with respect to f_{SIRC} at T_A = 55 °C in high frequency configuration	High frequency configuration	–10	—	10	%

1. V_{DD} = 3.3 V ± 10% / 5.0 V ± 10%, T_A = –40 to 125 °C, unless otherwise specified.
2. This does not include consumption linked to clock tree toggling and peripherals consumption when RC oscillator is ON.

4.17 ADC electrical characteristics

4.17.1 Introduction

The device provides two Successive Approximation Register (SAR) analog-to-digital converters (10-bit and 12-bit).

Distributor of STMicroelectronics: Excellent Integrated System Limited
Datasheet of SPC560B54L3C6E0Y - IC MCU 32BIT 768KB FLASH 100LQFP
Contact us: sales@integrated-circuit.com Website: www.integrated-circuit.com

Figure 16. ADC_0 characteristic and error definitions

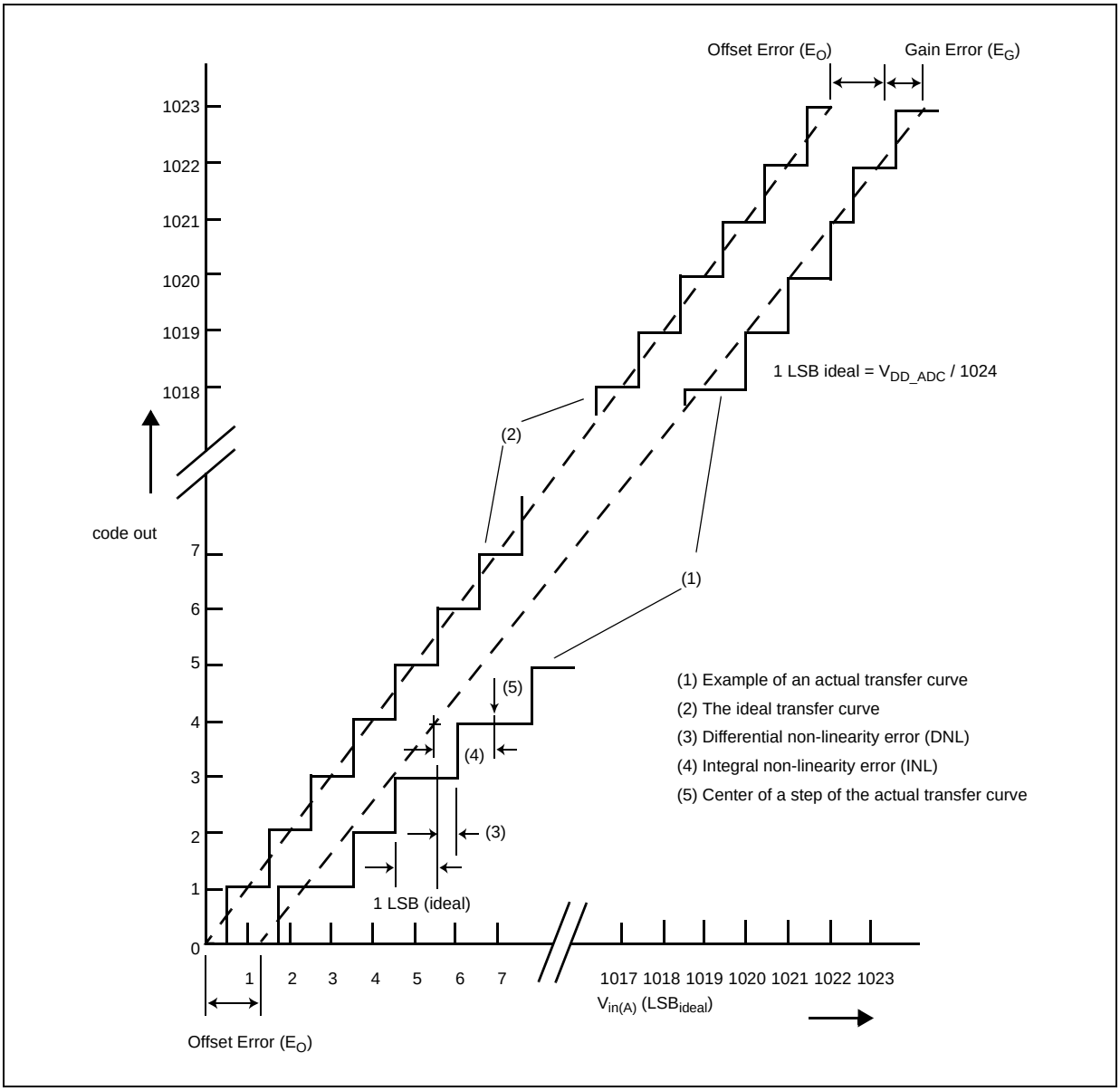

4.17.2 Input impedance and ADC accuracy

In the following analysis, the input circuit corresponding to the precise channels is considered.

To preserve the accuracy of the A/D converter, it is necessary that analog input pins have low AC impedance. Placing a capacitor with good high frequency characteristics at the input pin of the device can be effective: the capacitor should be as large as possible, ideally infinite. This capacitor contributes to attenuating the noise present on the input pin; furthermore, it sources charge during the sampling phase, when the analog signal source is a high-impedance source.

A real filter can typically be obtained by using a series resistance with a capacitor on the input pin (simple RC filter). The RC filtering may be limited according to the value of source

Distributor of STMicroelectronics: Excellent Integrated System Limited
Datasheet of SPC560B54L3C6E0Y - IC MCU 32BIT 768KB FLASH 100LQFP
Contact us: sales@integrated-circuit.com Website: www.integrated-circuit.com

impedance of the transducer or circuit supplying the analog signal to be measured. The filter at the input pins must be designed taking into account the dynamic characteristics of the input signal (bandwidth) and the equivalent input impedance of the ADC itself.

In fact a current sink contributor is represented by the charge sharing effects with the sampling capacitance: being C_S and C_{p2} substantially two switched capacitances, with a frequency equal to the conversion rate of the ADC, it can be seen as a resistive path to ground. For instance, assuming a conversion rate of 1 MHz, with C_S+C_{p2} equal to 3 pF, a resistance of 330 kΩ is obtained (R_{EQ} = 1 / (f_c × (C_S+C_{p2})), where f_c represents the conversion rate at the considered channel). To minimize the error induced by the voltage partitioning between this resistance (sampled voltage on C_S+C_{p2}) and the sum of R_S + R_F, the external circuit must be designed to respect the *Equation 4*:

Equation 4

$$V_A \bullet \frac{R_S + R_F}{R_{EQ}} < \frac{1}{2} LSB$$

Equation 4 generates a constraint for external network design, in particular on a resistive path.

Figure 17. Input equivalent circuit (precise channels)

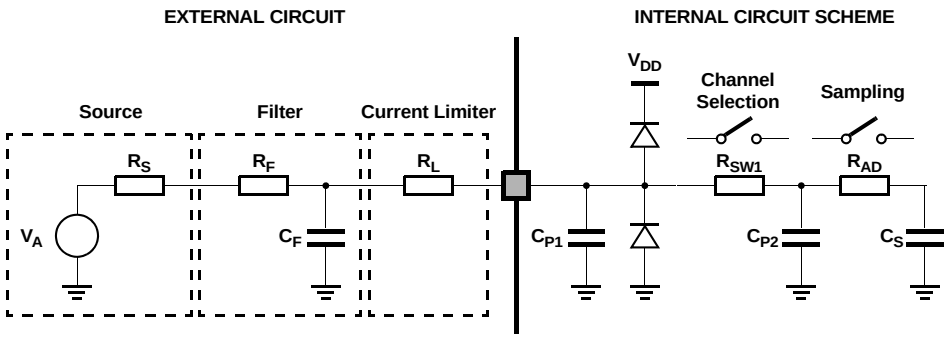

R_S Source Impedance

R_F Filter Resistance

CF Filter Capacitance

R_L Current Limiter Resistance

R_{SW1} Channel Selection Switch Impedance

R_{AD}Sampling Switch Impedance

C_P Pin Capacitance (two contributions, C_{P1} and C_{P2})

C_S Sampling Capacitance

Distributor of STMicroelectronics: Excellent Integrated System Limited
Datasheet of SPC560B54L3C6E0Y - IC MCU 32BIT 768KB FLASH 100LQFP
Contact us: sales@integrated-circuit.com Website: www.integrated-circuit.com

Figure 18. Input equivalent circuit (extended channels)

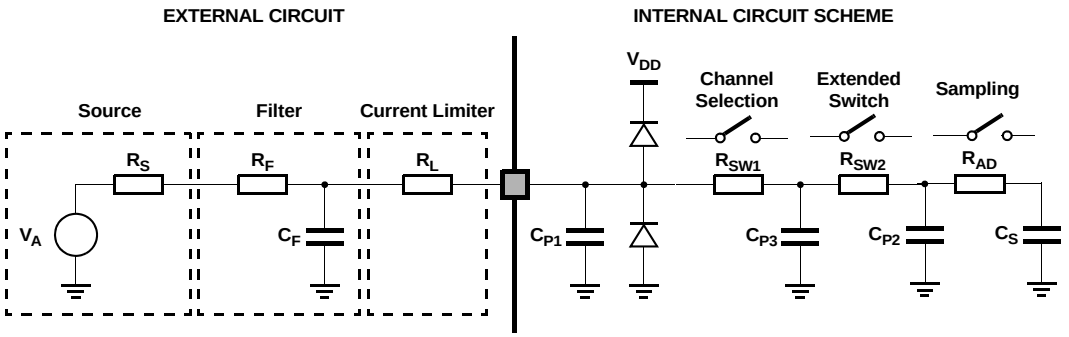

R_S Source Impedance

R_F Filter Resistance

C_F Filter Capacitance

R_L Current Limiter Resistance

R_{SW} Channel Selection Switch Impedance (two contributions R_{SW1} and R_{SW2})

R_{AD}Sampling Switch Impedance

C_P Pin Capacitance (three contributions, C_{P1}, C_{P2} and C_{P3})

C_S Sampling Capacitance

A second aspect involving the capacitance network shall be considered. Assuming the three capacitances C_F, C_{P1} and C_{P2} are initially charged at the source voltage V_A (refer to the equivalent circuit reported in *Figure 17*): A charge sharing phenomenon is installed when the sampling phase is started (A/D switch close).

Figure 19. Transient behavior during sampling phase

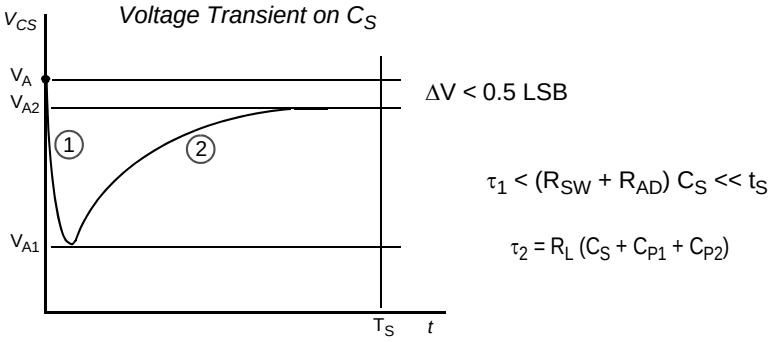

In particular two different transient periods can be distinguished:

Distributor of STMicroelectronics: Excellent Integrated System Limited
Datasheet of SPC560B54L3C6E0Y - IC MCU 32BIT 768KB FLASH 100LQFP
Contact us: sales@integrated-circuit.com Website: www.integrated-circuit.com

1. A first and quick charge transfer from the internal capacitance C_{P1} and C_{P2} to the sampling capacitance C_S occurs (C_S is supposed initially completely discharged): considering a worst case (since the time constant in reality would be faster) in which C_{P2} is reported in parallel to C_{P1} (call $C_P = C_{P1} + C_{P2}$), the two capacitances C_P and C_S are in series, and the time constant is

Equation 5

$$\tau_1 = (R_{SW} + R_{AD}) \bullet \frac{C_P \bullet C_S}{C_P + C_S}$$

Equation 5 can again be simplified considering only C_S as an additional worst condition. In reality, the transient is faster, but the A/D converter circuitry has been designed to be robust also in the very worst case: the sampling time t_S is always much longer than the internal time constant:

Equation 6

$$\tau_1 < (R_{SW} + R_{AD}) \bullet C_S \ll t_s$$

The charge of C_{P1} and C_{P2} is redistributed also on C_S, determining a new value of the voltage V_{A1} on the capacitance according to *Equation 7*:

Equation 7

$$V_{A1} \bullet (C_S + C_{P1} + C_{P2}) = V_A \bullet (C_{P1} + C_{P2})$$

2. A second charge transfer involves also C_F (that is typically bigger than the on-chip capacitance) through the resistance R_L: again considering the worst case in which C_{P2} and C_S were in parallel to C_{P1} (since the time constant in reality would be faster), the time constant is:

Equation 8

$$\tau_2 < R_L \bullet (C_S + C_{P1} + C_{P2})$$

In this case, the time constant depends on the external circuit: in particular imposing that the transient is completed well before the end of sampling time t_s, a constraints on R_L sizing is obtained:

Equation 9 ADC_0 (10-bit)

$$8.5 \bullet \tau_2 = 8.5 \bullet R_L \bullet (C_S + C_{P1} + C_{P2}) < t_s$$

Equation 10 ADC_1 (12-bit)

$$10 \bullet \tau_2 = 10 \bullet R_L \bullet (C_S + C_{P1} + C_{P2}) < t_s$$

Of course, R_L shall be sized also according to the current limitation constraints, in combination with R_S (source impedance) and R_F (filter resistance). Being C_F definitively bigger than C_{P1}, C_{P2} and C_S, then the final voltage V_{A2} (at the end of the charge transfer transient) will be much higher than V_{A1}. *Equation 11* must be respected (charge balance assuming now C_S already charged at V_{A1}):

Distributor of STMicroelectronics: Excellent Integrated System Limited
Datasheet of SPC560B54L3C6E0Y - IC MCU 32BIT 768KB FLASH 100LQFP
Contact us: sales@integrated-circuit.com Website: www.integrated-circuit.com

Equation 11

$$V_{A2} \bullet (C_S + C_{P1} + C_{P2} + C_F) = V_A \bullet C_F + V_{A1} \bullet (C_{P1} + C_{P2} + C_S)$$

The two transients above are not influenced by the voltage source that, due to the presence of the $R_F C_F$ filter, is not able to provide the extra charge to compensate the voltage drop on C_S with respect to the ideal source V_A; the time constant $R_F C_F$ of the filter is very high with respect to the sampling time (t_s). The filter is typically designed to act as antialiasing.

Figure 20. Spectral representation of input signal

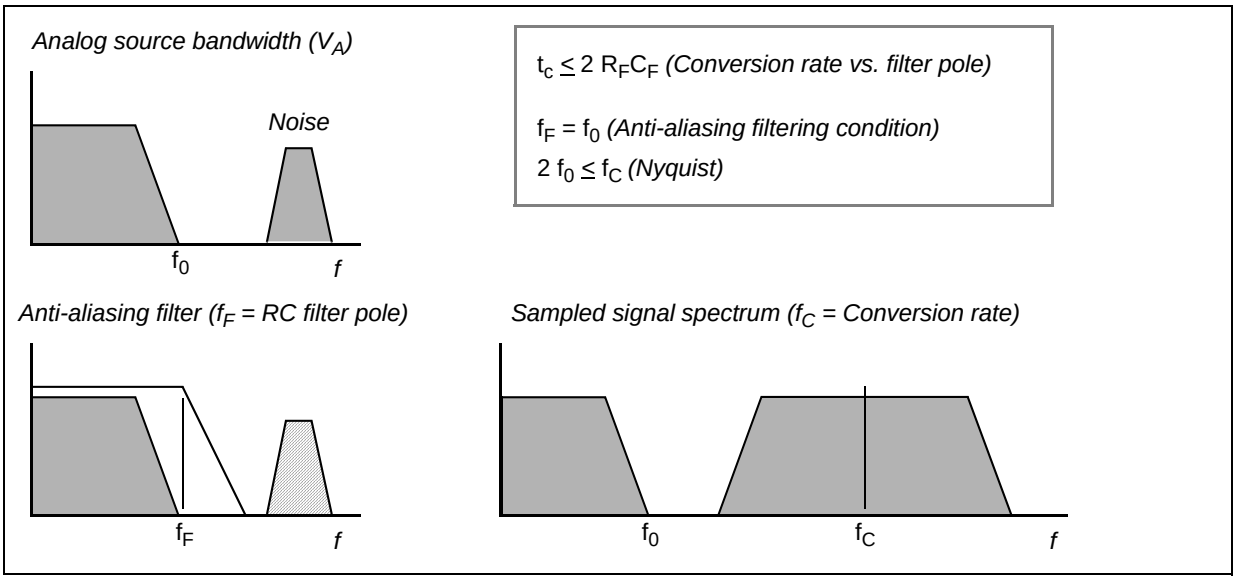

Calling f_0 the bandwidth of the source signal (and as a consequence the cut-off frequency of the antialiasing filter, f_F), according to the Nyquist theorem the conversion rate f_C must be at least $2f_0$; it means that the constant time of the filter is greater than or at least equal to twice the conversion period (t_c). Again the conversion period t_c is longer than the sampling time t_s, which is just a portion of it, even when fixed channel continuous conversion mode is selected (fastest conversion rate at a specific channel): in conclusion it is evident that the time constant of the filter $R_F C_F$ is definitively much higher than the sampling time t_s, so the charge level on C_S cannot be modified by the analog signal source during the time in which the sampling switch is closed.

The considerations above lead to impose new constraints on the external circuit, to reduce the accuracy error due to the voltage drop on C_S; from the two charge balance equations above, it is simple to derive *Equation 12* between the ideal and real sampled voltage on C_S:

Equation 12

$$\frac{V_{A2}}{V_A} = \frac{C_{P1} + C_{P2} + C_F}{C_{P1} + C_{P2} + C_F + C_S}$$

From this formula, in the worst case (when V_A is maximum, that is for instance 5 V), assuming to accept a maximum error of half a count, a constraint is evident on C_F value:

Equation 13 ADC_0 (10-bit)

$$C_F > 2048 \bullet C_S$$

Distributor of STMicroelectronics: Excellent Integrated System Limited
Datasheet of SPC560B54L3C6E0Y - IC MCU 32BIT 768KB FLASH 100LQFP
Contact us: sales@integrated-circuit.com Website: www.integrated-circuit.com

Equation 14 ADC_1 (12-bit)

$$C_F > 8192 \bullet C_S$$

4.17.3 ADC electrical characteristics

Table 44. ADC input leakage current

Symbol		C	Parameter	Conditions		Value			Unit
						Min	Typ	Max	
I_{LKG}	CC	D	Input leakage current	T_A = –40 °C	No current injection on adjacent pin	—	1	70	nA
		D		T_A = 25 °C		—	1	70	
		D		T_A = 85 °C			3	100	
		D		T_A = 105 °C		—	8	200	
		P		T_A = 125 °C		—	45	400	

Table 45. ADC_0 conversion characteristics (10-bit ADC_0)

Symbol		C	Parameter	Conditions(1)	Value			Unit
					Min	Typ	Max	
V_{SS_ADC0}	SR	—	Voltage on VSS_HV_ADC0 (ADC_0 reference) pin with respect to ground (V_{SS})(2)	—	–0.1	—	0.1	V
V_{DD_ADC0}	SR	—	Voltage on VDD_HV_ADC pin (ADC reference) with respect to ground (V_{SS})	—	V_{DD} – 0.1	—	V_{DD} + 0.1	V
V_{AINx}	SR	—	Analog input voltage(3)	—	V_{SS_ADC0} – 0.1	—	V_{DD_ADC0} + 0.1	V
$I_{ADC0pwd}$	SR	—	ADC_0 consumption in power down mode	—	—	—	50	µA
$I_{ADC0run}$	SR	—	ADC_0 consumption in running mode	—	—	—	5	mA
f_{ADC0}	SR	—	ADC_0 analog frequency	—	6	—	32 + 4%	MHz
Δ_{ADC0_SYS}	SR	—	ADC_0 digital clock duty cycle (ipg_clk)	ADCLKSEL = 1(4)	45	—	55	%
t_{ADC0_PU}	SR	—	ADC_0 power up delay	—	—	—	1.5	µs
t_{ADC0_S}	CC	T	Sampling time(5)	f_{ADC} = 32 MHz, INPSAMP = 17	0.5	—		µs
				f_{ADC} = 6 MHz, INPSAMP = 255	—	—	42	
t_{ADC0_C}	CC	P	Conversion time(6)	f_{ADC} = 32 MHz, INPCMP = 2	0.625	—	—	µs
C_S	CC	D	ADC_0 input sampling capacitance	—	—	—	3	pF

Distributor of STMicroelectronics: Excellent Integrated System Limited
Datasheet of SPC560B54L3C6E0Y - IC MCU 32BIT 768KB FLASH 100LQFP
Contact us: sales@integrated-circuit.com Website: www.integrated-circuit.com

Table 45. ADC_0 conversion characteristics (10-bit ADC_0) (continued)

Symbol		C	Parameter	Conditions[1]		Value			Unit
						Min	Typ	Max	
C_{P1}	CC	D	ADC_0 input pin capacitance 1	—		—	—	3	pF
C_{P2}	CC	D	ADC_0 input pin capacitance 2	—		—	—	1	pF
C_{P3}	CC	D	ADC_0 input pin capacitance 3	—		—	—	1	pF
R_{SW1}	CC	D	Internal resistance of analog source	—		—	—	3	kΩ
R_{SW2}	CC	D	Internal resistance of analog source	—		—	—	2	kΩ
R_{AD}	CC	D	Internal resistance of analog source	—		—	—	2	kΩ
I_{INJ}	SR	—	Input current Injection	Current injection on one ADC_0 input, different from the converted one	V_{DD} = 3.3 V ± 10%	–5	—	5	mA
					V_{DD} = 5.0 V ± 10%	–5	—	5	
| INL |	CC	T	Absolute integral nonlinearity	No overload		—	0.5	1.5	LSB
| DNL |	CC	T	Absolute differential nonlinearity	No overload		—	0.5	1.0	LSB
$\| E_O \|$	CC	T	Absolute offset error	—		—	0.5	—	LSB
$\| E_G \|$	CC	T	Absolute gain error	—		—	0.6	—	LSB
TUEP	CC	P	Total unadjusted error[7] for precise channels, input only pins	Without current injection		–2	0.6	2	LSB
		T		With current injection		–3	—	3	
TUEX	CC	T	Total unadjusted error[7] for extended channel	Without current injection		–3	1	3	LSB
		T		With current injection		–4		4	

1. V_{DD} = 3.3 V ± 10% / 5.0 V ± 10%, T_A = –40 to 125 °C, unless otherwise specified.
2. Analog and digital V_{SS} **must** be common (to be tied together externally).
3. V_{AINx} may exceed V_{SS_ADC0} and V_{DD_ADC0} limits, remaining on absolute maximum ratings, but the results of the conversion will be clamped respectively to 0x000 or 0x3FF.
4. Duty cycle is ensured by using system clock without prescaling. When ADCLKSEL = 0, the duty cycle is ensured by internal divider by 2.
5. During the sampling time the input capacitance C_S can be charged/discharged by the external source. The internal resistance of the analog source must allow the capacitance to reach its final voltage level within t_{ADC0_S}. After the end of the sampling time t_{ADC0_S}, changes of the analog input voltage have no effect on the conversion result. Values for the sampling clock t_{ADC0_S} depend on programming.
6. This parameter does not include the sampling time t_{ADC0_S}, but only the time for determining the digital result and the time to load the result's register with the conversion result.
7. Total Unadjusted Error: The maximum error that occurs without adjusting Offset and Gain errors. This error is a combination of Offset, Gain and Integral Linearity errors.

Distributor of STMicroelectronics: Excellent Integrated System Limited
Datasheet of SPC560B54L3C6E0Y - IC MCU 32BIT 768KB FLASH 100LQFP
Contact us: sales@integrated-circuit.com Website: www.integrated-circuit.com

Figure 21. ADC_1 characteristic and error definitions

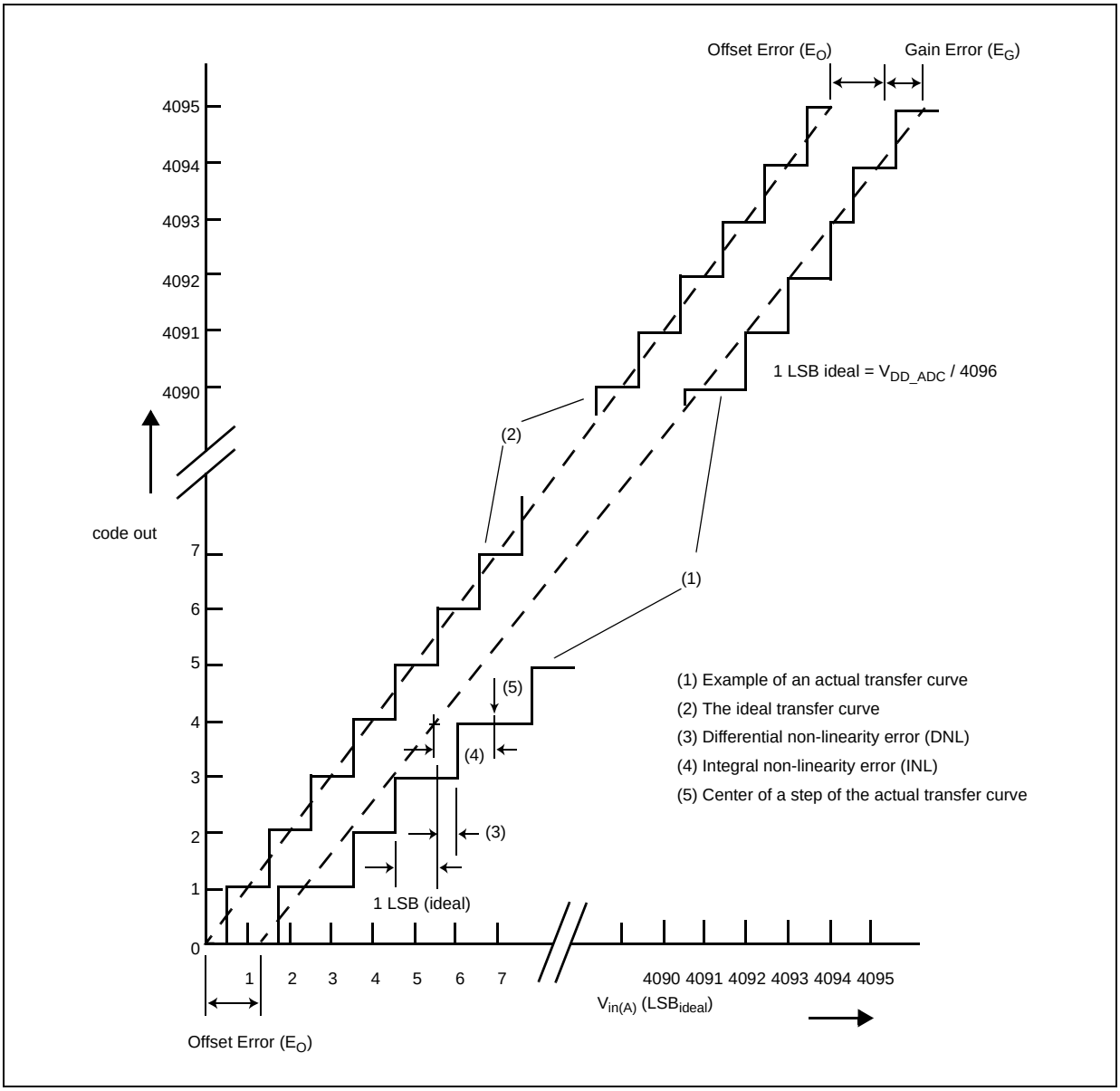

Table 46. ADC_1 conversion characteristics (12-bit ADC_1)

Symbol		C	Parameter	Conditions[1]	Value			Unit
					Min	Typ	Max	
V_{SS_ADC1}	SR	—	Voltage on VSS_HV_ADC1 (ADC_1 reference) pin with respect to ground (V_{SS})[2]	—	–0.1	—	0.1	V
V_{DD_ADC1}	SR	—	Voltage on VDD_HV_ADC1 pin (ADC_1 reference) with respect to ground (V_{SS})	—	V_{DD} – 0.1	—	V_{DD} + 0.1	V
V_{AINx}	SR	—	Analog input voltage[3]	—	V_{SS_ADC1} – 0.1	—	V_{DD_ADC1} + 0.1	V

Distributor of STMicroelectronics: Excellent Integrated System Limited
Datasheet of SPC560B54L3C6E0Y - IC MCU 32BIT 768KB FLASH 100LQFP
Contact us: sales@integrated-circuit.com Website: www.integrated-circuit.com

Table 46. ADC_1 conversion characteristics (12-bit ADC_1) (continued)

Symbol		C	Parameter	Conditions[1]	Value			Unit
					Min	Typ	Max	
$I_{ADC1pwd}$	SR	—	ADC_1 consumption in power down mode	—	—	—	50	µA
$I_{ADC1run}$	SR	—	ADC_1 consumption in running mode	—	—	—	6	mA
f_{ADC1}	SR	—	ADC_1 analog frequency	V_{DD} = 3.3 V	3.33	—	20 + 4%	MHz
				V_{DD} = 5 V	3.33	—	32 + 4%	
t_{ADC1_PU}	SR	—	ADC_1 power up delay	—	—	—	1.5	µs
t_{ADC1_S}	CC	T	Sampling time[4] V_{DD} = 3.3 V	f_{ADC1} = 20 MHz, INPSAMP = 12	600	—	—	ns
			Sampling time[4] V_{DD} = 5.0 V	f_{ADC1} = 32 MHz, INPSAMP = 17	500	—	—	
			Sampling time[4] V_{DD} = 3.3 V	f_{ADC1} = 3.33 MHz, INPSAMP = 255	—	—	76.2	µs
			Sampling time[4] V_{DD} = 5.0 V	f_{ADC1} = 3.33 MHz, INPSAMP = 255	—	—	76.2	
t_{ADC1_C}	CC	P	Conversion time[5] V_{DD} = 3.3 V	f_{ADC1} = 20 MHz, INPCMP = 0	2.4	—	—	µs
			Conversion time[5] V_{DD} = 5.0 V	$f_{ADC\ 1}$ = 32 MHz, INPCMP = 0	1.5	—	—	µs
			Conversion time[5] V_{DD} = 3.3 V	$f_{ADC\ 1}$ = 13.33 MHz, INPCMP = 0	—	—	3.6	µs
			Conversion time[5] V_{DD} = 5.0 V	f_{ADC1} = 13.33 MHz, INPCMP = 0	—	—	3.6	µs
Δ_{ADC1_SYS}	SR	—	ADC_1 digital clock duty cycle	ADCLKSEL = 1[6]	45	—	55	%
C_S	CC	D	ADC_1 input sampling capacitance	—	—	—	5	pF
C_{P1}	CC	D	ADC_1 input pin capacitance 1	—	—	—	3	pF
C_{P2}	CC	D	ADC_1 input pin capacitance 2	—	—	—	1	pF
C_{P3}	CC	D	ADC_1 input pin capacitance 3	—	—	—	1.5	pF
R_{SW1}	CC	D	Internal resistance of analog source	—	—	—	1	kΩ
R_{SW2}	CC	D	Internal resistance of analog source	—	—	—	2	kΩ
R_{AD}	CC	D	Internal resistance of analog source	—	—	—	0.3	kΩ

Distributor of STMicroelectronics: Excellent Integrated System Limited
Datasheet of SPC560B54L3C6E0Y - IC MCU 32BIT 768KB FLASH 100LQFP
Contact us: sales@integrated-circuit.com Website: www.integrated-circuit.com

Table 46. ADC_1 conversion characteristics (12-bit ADC_1) (continued)

Symbol		C	Parameter	Conditions(1)		Value			Unit
						Min	Typ	Max	
I_{INJ}	SR	—	Input current Injection	Current injection on one ADC_1 input, different from the converted one	V_{DD} = 3.3 V ± 10%	–5	—	5	mA
					V_{DD} = 5.0 V ± 10%	–5	—	5	
| INLP |	CC	T	Absolute integral nonlinearity – Precise channels	No overload		—	1	3	LSB
| INLX |	CC	T	Absolute integral nonlinearity – Extended channels	No overload		—	1.5	5	LSB
| DNL |	CC	T	Absolute differential nonlinearity	No overload		—	0.5	1	LSB
| E_O |	CC	T	Absolute offset error	—		—	2	—	LSB
| E_G |	CC	T	Absolute gain error	—		—	2	—	LSB
TUEP(7)	CC	P	Total unadjusted error for precise channels, input only pins	Without current injection		–6	—	6	LSB
		T		With current injection		–8	—	8	
TUEX(7)	CC	T	Total unadjusted error for extended channel	Without current injection		–10	—	10	LSB
		T		With current injection		–12	—	12	

1. V_{DD} = 3.3 V ± 10% / 5.0 V ± 10%, T_A = –40 to 125 °C, unless otherwise specified
2. Analog and digital V_{SS} **must** be common (to be tied together externally).
3. V_{AINx} may exceed V_{SS_ADC1} and V_{DD_ADC1} limits, remaining on absolute maximum ratings, but the results of the conversion will be clamped respectively to 0x000 or 0xFFF.
4. During the sampling time the input capacitance C_S can be charged/discharged by the external source. The internal resistance of the analog source must allow the capacitance to reach its final voltage level within t_{ADC1_S}. After the end of the sampling time t_{ADC1_S}, changes of the analog input voltage have no effect on the conversion result. Values for the sampling clock t_{ADC1_S} depend on programming.
5. This parameter does not include the sampling time t_{ADC1_S}, but only the time for determining the digital result and the time to load the result's register with the conversion result.
6. Duty cycle is ensured by using system clock without prescaling. When ADCLKSEL = 0, the duty cycle is ensured by internal divider by 2.
7. Total Unadjusted Error: The maximum error that occurs without adjusting Offset and Gain errors. This error is a combination of Offset, Gain and Integral Linearity errors.

Distributor of STMicroelectronics: Excellent Integrated System Limited
Datasheet of SPC560B54L3C6E0Y - IC MCU 32BIT 768KB FLASH 100LQFP
Contact us: sales@integrated-circuit.com Website: www.integrated-circuit.com

4.18 On-chip peripherals

4.18.1 Current consumption

Table 47. On-chip peripherals current consumption(1)

Symbol		C	Parameter	Conditions		Typical value(2)	Unit
$I_{DD_BV(CAN)}$	CC	T	CAN (FlexCAN) supply current on V_{DD_BV}	Bitrate: 500 Kbyte/s	Total (static + dynamic) consumption: – FlexCAN in loop-back mode – XTAL at 8 MHz used as CAN engine clock source – Message sending period is 580 µs	8 * f_{periph} + 85	µA
				Bitrate: 125 Kbyte/s		8 * f_{periph} + 27	
$I_{DD_BV(eMIOS)}$	CC	T	eMIOS supply current on V_{DD_BV}	Static consumption: – eMIOS channel OFF – Global prescaler enabled		29 * f_{periph}	µA
				Dynamic consumption: – It does not change varying the frequency (0.003 mA)		3	
$I_{DD_BV(SCI)}$	CC	T	SCI (LINFlex) supply current on V_{DD_BV}	Total (static + dynamic) consumption: – LIN mode – Baudrate: 20 Kbyte/s		5 * f_{periph} + 31	µA
$I_{DD_BV(SPI)}$	CC	T	SPI (DSPI) supply current on V_{DD_BV}	Ballast static consumption (only clocked)		1	µA
				Ballast dynamic consumption (continuous communication): – Baudrate: 2 Mbit/s – Transmission every 8 µs – Frame: 16 bits		16 * f_{periph}	
I_{DD_BV} (ADC_0/ADC_1)	CC	T	ADC_0/ADC_1 supply current on V_{DD_BV}	V_{DD} = 5.5 V	Ballast static consumption (no conversion)(3)	41 * f_{periph}	µA
					Ballast dynamic consumption (continuous conversion)(3)	46 * f_{periph}	
$I_{DD_HV_ADC0}$	CC	T	ADC_0 supply current on $V_{DD_HV_ADC0}$	V_{DD} = 5.5 V	Analog static consumption (no conversion)	200	µA
					Analog dynamic consumption (continuous conversion)	3	mA
$I_{DD_HV_ADC1}$	CC	T	ADC_1 supply current on $V_{DD_HV_ADC1}$	V_{DD} = 5.5 V	Analog static consumption (no conversion)	300 * f_{periph}	µA
					Analog dynamic consumption (continuous conversion)	4	mA

Distributor of STMicroelectronics: Excellent Integrated System Limited
Datasheet of SPC560B54L3C6E0Y - IC MCU 32BIT 768KB FLASH 100LQFP
Contact us: sales@integrated-circuit.com Website: www.integrated-circuit.com

Table 47. On-chip peripherals current consumption(1) (continued)

Symbol		C	Parameter	Conditions		Typical value(2)	Unit
$I_{DD_HV(FLASH)}$	CC	T	CFlash + DFlash supply current on V_{DD_HV}	V_{DD} = 5.5 V	—	12	mA
$I_{DD_HV(PLL)}$	CC	T	PLL supply current on V_{DD_HV}	V_{DD} = 5.5 V	—	30 * f_{periph}	µA

1. Operating conditions: T_A = 25 °C, f_{periph} = 8 MHz to 64 MHz.
2. f_{periph} is an absolute value.
3. During the conversion, the total current consumption is given from the sum of the static and dynamic consumption, i.e., (41 + 46) * f_{periph}.

Distributor of STMicroelectronics: Excellent Integrated System Limited
Datasheet of SPC560B54L3C6E0Y - IC MCU 32BIT 768KB FLASH 100LQFP
Contact us: sales@integrated-circuit.com Website: www.integrated-circuit.com

4.18.2 DSPI characteristics

Table 48. DSPI characteristics(1)

No.	Symbol		C	Parameter		DSPI0/DSPI1/DSPI3/DSPI5			DSPI2/DSPI4			Unit
						Min	Typ	Max	Min	Typ	Max	
1	t_{SCK}	SR	D	SCK cycle time	Master mode (MTFE = 0)	125	—	—	333	—	—	ns
			D		Slave mode (MTFE = 0)	125	—	—	333	—	—	
			D		Master mode (MTFE = 1)	83	—	—	125	—	—	
			D		Slave mode (MTFE = 1)	83	—	—	125	—	—	
—	f_{DSPI}	SR	D	DSPI digital controller frequency		—	—	f_{CPU}	—	—	f_{CPU}	MHz
—	Δt_{CSC}	CC	D	Internal delay between pad associated to SCK and pad associated to CSn in master mode for CSn1->0	Master mode	—	—	130(2)	—	—	15(3)	ns
—	Δt_{ASC}	CC	D	Internal delay between pad associated to SCK and pad associated to CSn in master mode for CSn1->1	Master mode	—	—	130(3)	—	—	130(3)	ns
2	t_{CSCext}(4)	SR	D	CS to SCK delay	Slave mode	32	—	—	32	—	—	ns
3	t_{ASCext}(5)	SR	D	After SCK delay	Slave mode	$1/f_{DSPI} + 5$	—	—	$1/f_{DSPI} + 5$	—	—	ns
4	t_{SDC}	CC	D	SCK duty cycle	Master mode	—	$t_{SCK/2}$	—	—	$t_{SCK/2}$	—	ns
		SR	D		Slave mode	$t_{SCK/2}$	—	—	$t_{SCK/2}$	—	—	
5	t_A	SR	D	Slave access time	Slave mode	—	—	$1/f_{DSPI} + 70$	—	—	$1/f_{DSPI} + 130$	ns
6	t_{DI}	SR	D	Slave SOUT disable time	Slave mode	7	—	—	7	—	—	ns
7	t_{PCSC}	SR	D	PCSx to $\overline{\text{PCSS}}$ time	—	0	—	—	0	—	—	ns
8	t_{PASC}	SR	D	$\overline{\text{PCSS}}$ to PCSx time	—	0	—	—	0	—	—	ns

Distributor of STMicroelectronics: Excellent Integrated System Limited
Datasheet of SPC560B54L3C6E0Y - IC MCU 32BIT 768KB FLASH 100LQFP
Contact us: sales@integrated-circuit.com Website: www.integrated-circuit.com

Table 48. DSPI characteristics[1] (continued)

No.	Symbol		C	Parameter		DSPI0/DSPI1/DSPI3/DSPI5			DSPI2/DSPI4			Unit
						Min	Typ	Max	Min	Typ	Max	
9	t_{SUI}	SR	D	Data setup time for inputs	Master mode	43	—	—	145	—	—	ns
					Slave mode	5	—	—	5	—	—	
10	t_{HI}	SR	D	Data hold time for inputs	Master mode	0	—	—	0	—	—	ns
					Slave mode	2[6]	—	—	2[6]	—	—	
11	t_{SUO}[7]	CC	D	Data valid after SCK edge	Master mode	—	—	32	—	—	50	ns
					Slave mode	—	—	52	—	—	160	
12	t_{HO}[7]	CC	D	Data hold time for outputs	Master mode	0	—	—	0	—	—	ns
					Slave mode	8	—	—	13	—	—	

1. Operating conditions: C_L = 10 to 50 pF, $Slew_{IN}$ = 3.5 to 15 ns.
2. Maximum value is reached when CSn pad is configured as SLOW pad while SCK pad is configured as MEDIUM. A positive value means that SCK starts before CSn is asserted. DSPI2 has only SLOW SCK available.
3. Maximum value is reached when CSn pad is configured as MEDIUM pad while SCK pad is configured as SLOW. A positive value means that CSn is deasserted before SCK. DSPI0 and DSPI1 have only MEDIUM SCK available.
4. The t_{CSC} delay value is configurable through a register. When configuring t_{CSC} (using PCSSCK and CSSCK fields in DSPI_CTARx registers), delay between internal CS and internal SCK must be higher than Δt_{CSC} to ensure positive t_{CSCext}.
5. The t_{ASC} delay value is configurable through a register. When configuring t_{ASC} (using PASC and ASC fields in DSPI_CTARx registers), delay between internal CS and internal SCK must be higher than Δt_{ASC} to ensure positive t_{ASCext}.
6. This delay value corresponds to SMPL_PT = 00b which is bit field 9 and 8 of DSPI_MCR register.
7. SCK and SOUT are configured as MEDIUM pad.

Distributor of STMicroelectronics: Excellent Integrated System Limited
Datasheet of SPC560B54L3C6E0Y - IC MCU 32BIT 768KB FLASH 100LQFP
Contact us: sales@integrated-circuit.com Website: www.integrated-circuit.com

Figure 22. DSPI classic SPI timing — master, CPHA = 0

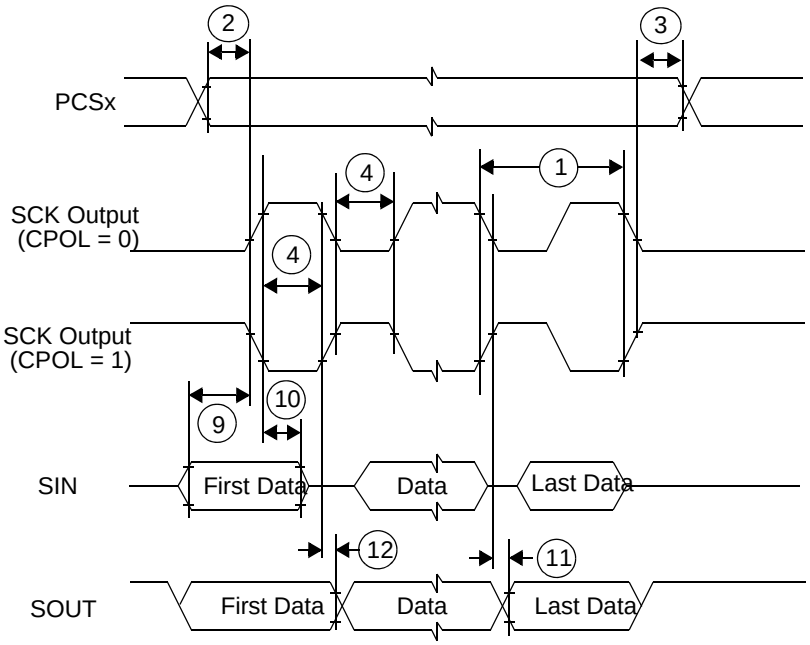

Note: Numbers shown reference *Table 47*.

Distributor of STMicroelectronics: Excellent Integrated System Limited
Datasheet of SPC560B54L3C6E0Y - IC MCU 32BIT 768KB FLASH 100LQFP
Contact us: sales@integrated-circuit.com Website: www.integrated-circuit.com

Figure 23. DSPI classic SPI timing — master, CPHA = 1

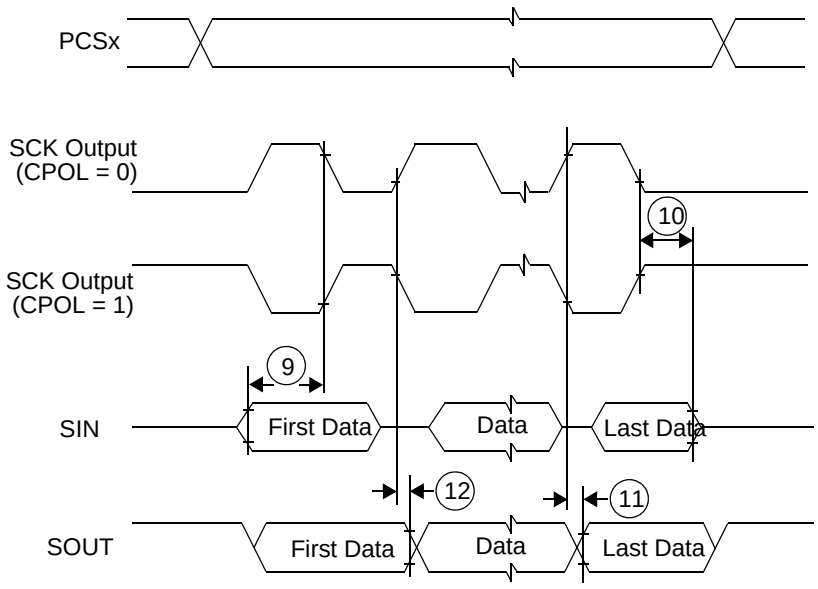

Note: Numbers shown reference *Table 47*.

Figure 24. DSPI classic SPI timing — slave, CPHA = 0

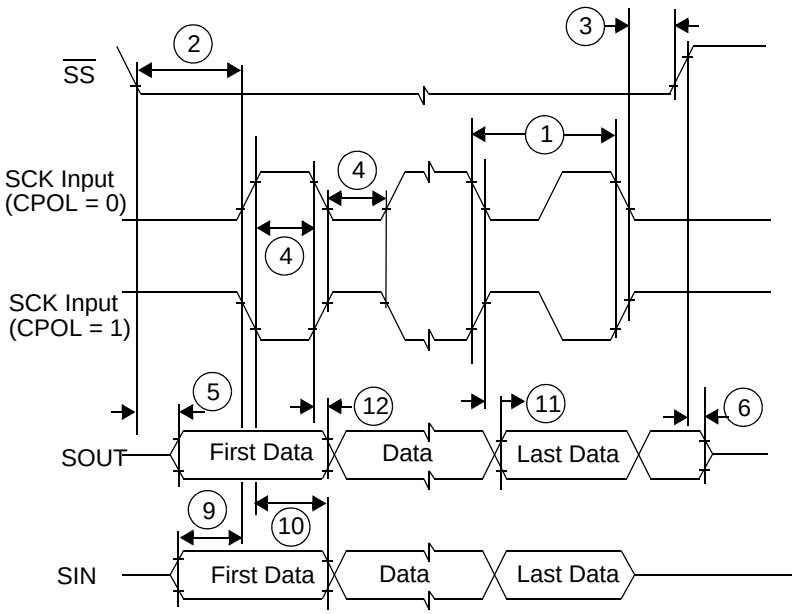

Note: Numbers shown reference *Table 47*.

Distributor of STMicroelectronics: Excellent Integrated System Limited
Datasheet of SPC560B54L3C6E0Y - IC MCU 32BIT 768KB FLASH 100LQFP
Contact us: sales@integrated-circuit.com Website: www.integrated-circuit.com

Figure 25. DSPI classic SPI timing — slave, CPHA = 1

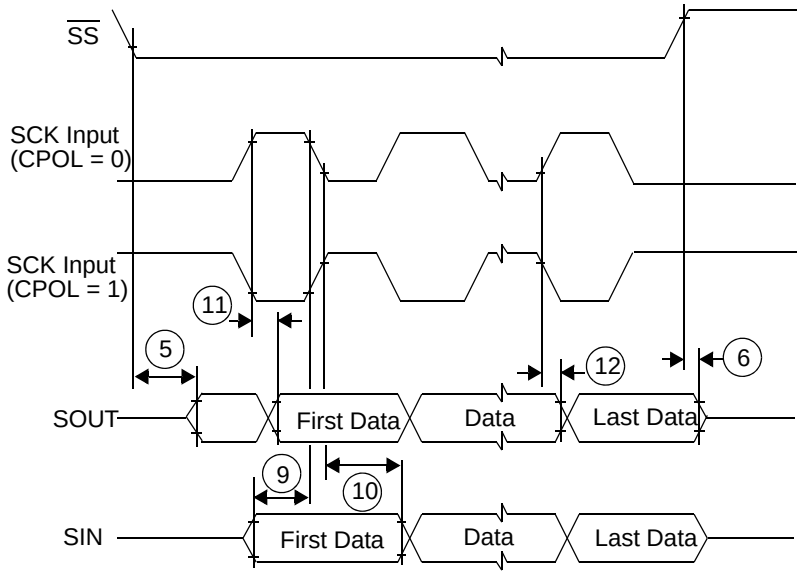

Note: Numbers shown reference *Table 47*.

Figure 26. DSPI modified transfer format timing — master, CPHA = 0

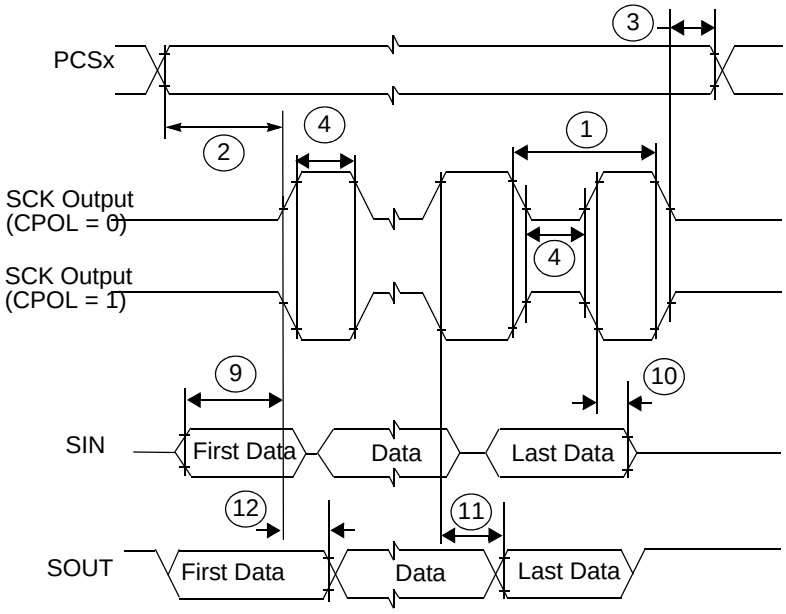

Note: Numbers shown reference *Table 47*.

Distributor of STMicroelectronics: Excellent Integrated System Limited
Datasheet of SPC560B54L3C6E0Y - IC MCU 32BIT 768KB FLASH 100LQFP
Contact us: sales@integrated-circuit.com Website: www.integrated-circuit.com

Figure 27. DSPI modified transfer format timing — master, CPHA = 1

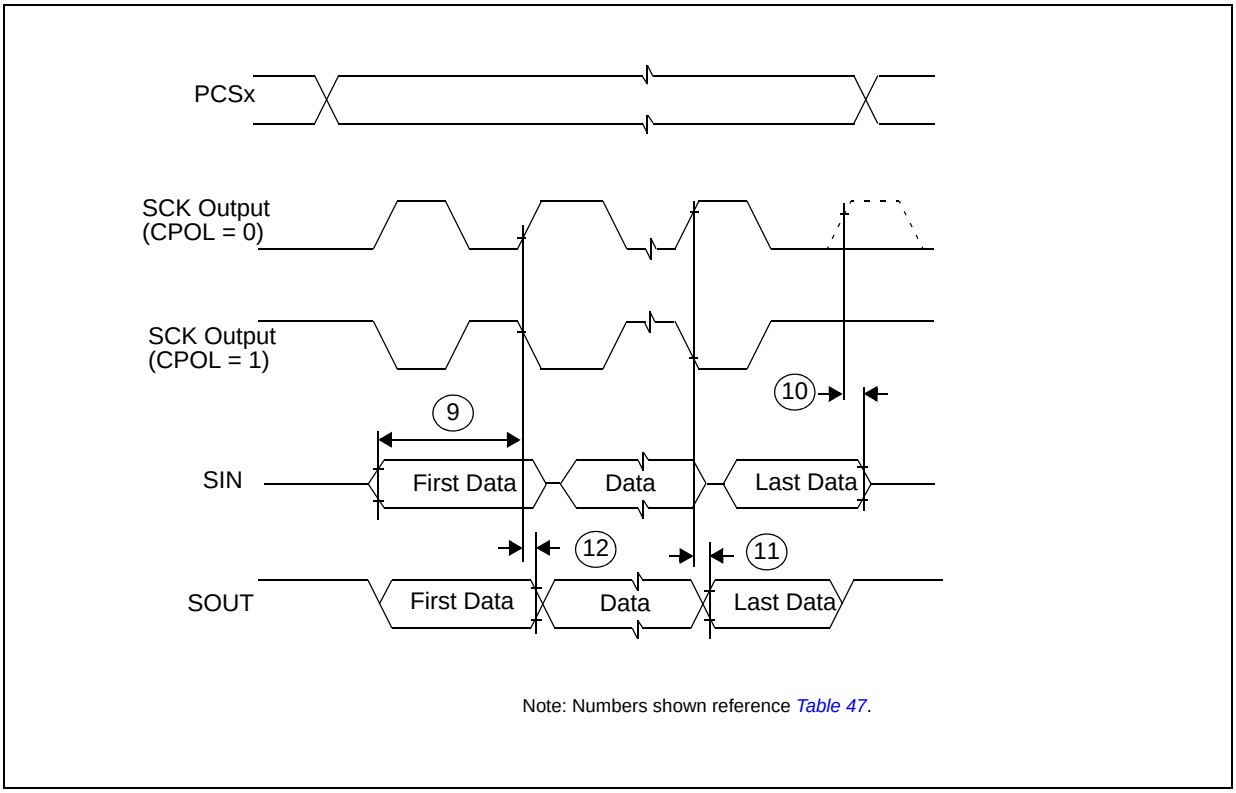

Note: Numbers shown reference *Table 47*.

Figure 28. DSPI modified transfer format timing — slave, CPHA = 0

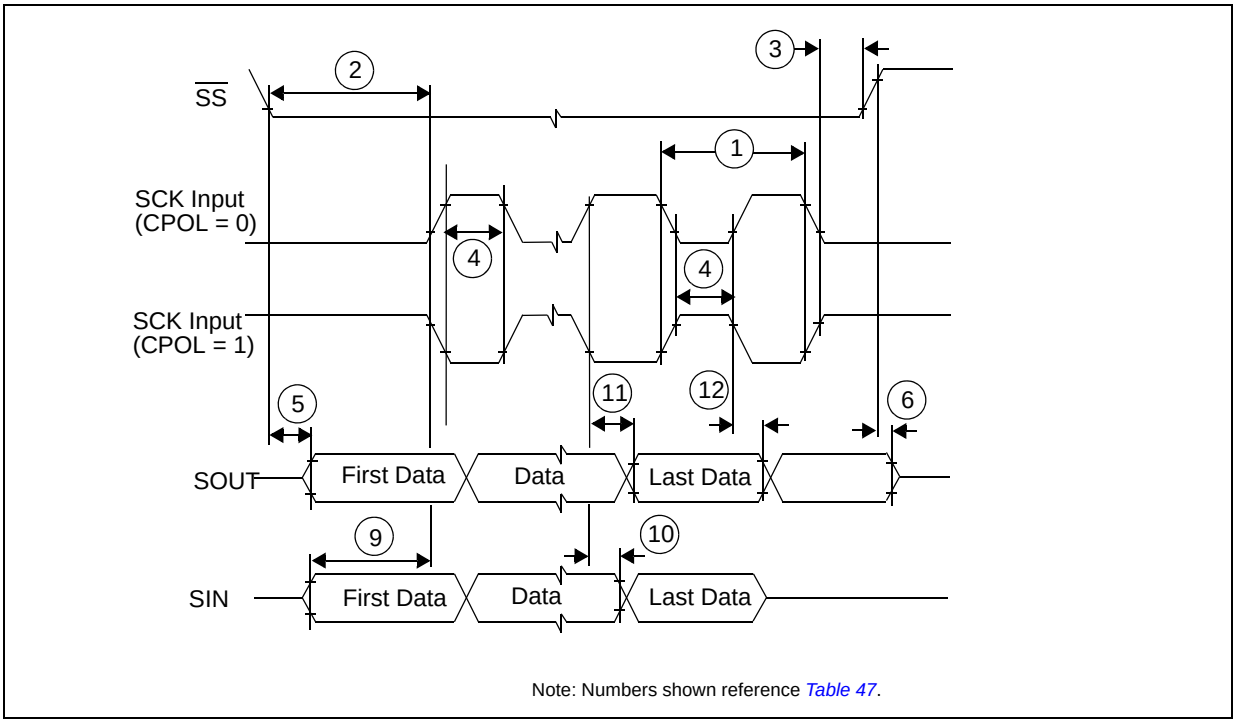

Note: Numbers shown reference *Table 47*.

Distributor of STMicroelectronics: Excellent Integrated System Limited
Datasheet of SPC560B54L3C6E0Y - IC MCU 32BIT 768KB FLASH 100LQFP
Contact us: sales@integrated-circuit.com Website: www.integrated-circuit.com

Figure 29. DSPI modified transfer format timing — slave, CPHA = 1

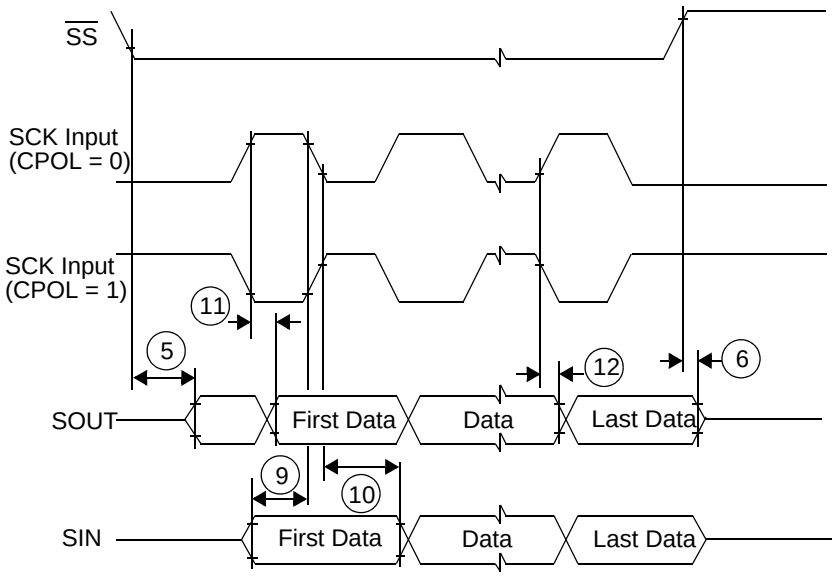

Note: Numbers shown reference *Table 47*.

Figure 30. DSPI PCS strobe ($\overline{\text{PCSS}}$) timing

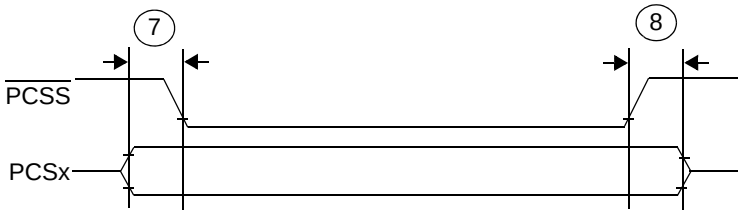

Note: Numbers shown reference *Table 47*.

4.18.3 Nexus characteristics

Table 49. Nexus characteristics

No.	Symbol		C	Parameter	Value			Unit
					Min	Typ	Max	
1	t_{TCYC}	CC	D	TCK cycle time	64	—	—	ns
2	t_{MCYC}	CC	D	MCKO cycle time	32	—	—	ns
3	t_{MDOV}	CC	D	MCKO low to MDO data valid	—	—	8	ns
4	t_{MSEOV}	CC	D	MCKO low to MSEO_b data valid	—	—	8	ns

Distributor of STMicroelectronics: Excellent Integrated System Limited
Datasheet of SPC560B54L3C6E0Y - IC MCU 32BIT 768KB FLASH 100LQFP
Contact us: sales@integrated-circuit.com Website: www.integrated-circuit.com

Table 49. Nexus characteristics (continued)

No.	Symbol		C	Parameter	Value			Unit
					Min	Typ	Max	
5	t_{EVTOV}	CC	D	MCKO low to EVTO data valid	—	—	8	ns
6	t_{NTDIS}	CC	D	TDI data setup time	15	—	—	ns
	t_{NTMSS}	CC	D	TMS data setup time	15	—	—	ns
7	t_{NTDIH}	CC	D	TDI data hold time	5	—	—	ns
	t_{NTMSH}	CC	D	TMS data hold time	5	—	—	ns
8	t_{TDOV}	CC	D	TCK low to TDO data valid	35	—	—	ns
9	t_{TDOI}	CC	D	TCK low to TDO data invalid	6	—	—	ns

Figure 31. Nexus TDI, TMS, TDO timing

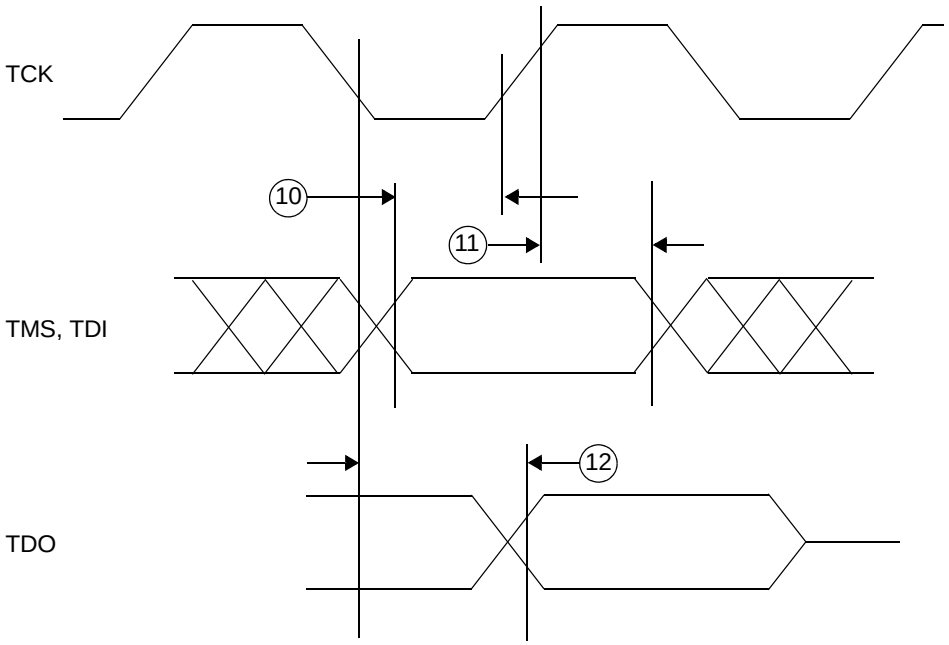

Note: Numbers shown reference *Table 49*.

Distributor of STMicroelectronics: Excellent Integrated System Limited
Datasheet of SPC560B54L3C6E0Y - IC MCU 32BIT 768KB FLASH 100LQFP
Contact us: sales@integrated-circuit.com Website: www.integrated-circuit.com

4.18.4 JTAG characteristics

Table 50. JTAG characteristics

No.	Symbol		C	Parameter	Value			Unit
					Min	Typ	Max	
1	t_{JCYC}	CC	D	TCK cycle time	64	—	—	ns
2	t_{TDIS}	CC	D	TDI setup time	15	—	—	ns
3	t_{TDIH}	CC	D	TDI hold time	5	—	—	ns
4	t_{TMSS}	CC	D	TMS setup time	15	—	—	ns
5	t_{TMSH}	CC	D	TMS hold time	5	—	—	ns
6	t_{TDOV}	CC	D	TCK low to TDO valid	—	—	33	ns
7	t_{TDOI}	CC	D	TCK low to TDO invalid	6	—	—	ns

Figure 32. Timing diagram — JTAG boundary scan

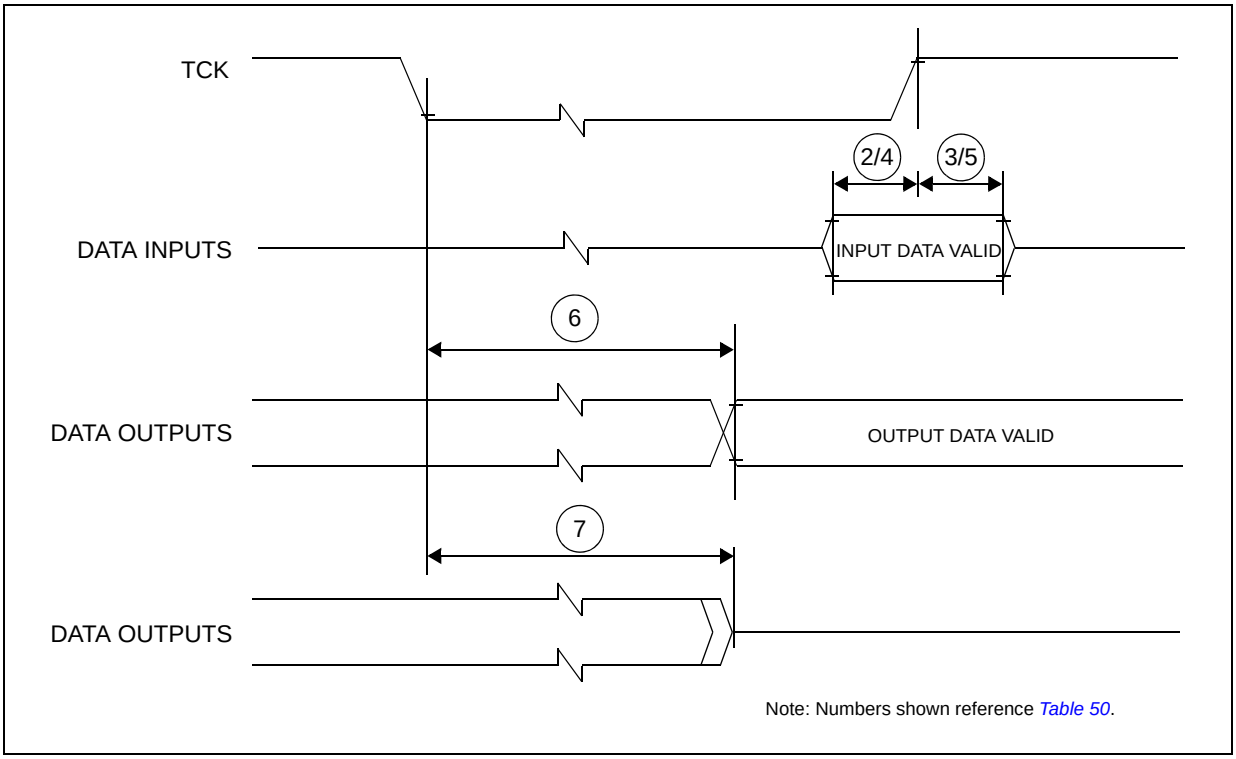

Note: Numbers shown reference *Table 50*.

Distributor of STMicroelectronics: Excellent Integrated System Limited
Datasheet of SPC560B54L3C6E0Y - IC MCU 32BIT 768KB FLASH 100LQFP
Contact us: sales@integrated-circuit.com Website: www.integrated-circuit.com

5 Package characteristics

5.1 ECOPACK®

In order to meet environmental requirements, ST offers these devices in different grades of ECOPACK® packages, depending on their level of environmental compliance. ECOPACK® specifications, grade definitions and product status are available at: *www.st.com*. ECOPACK® is an ST trademark.

5.2 Package mechanical data

5.2.1 LQFP176

Figure 33. LQFP176 package mechanical drawing

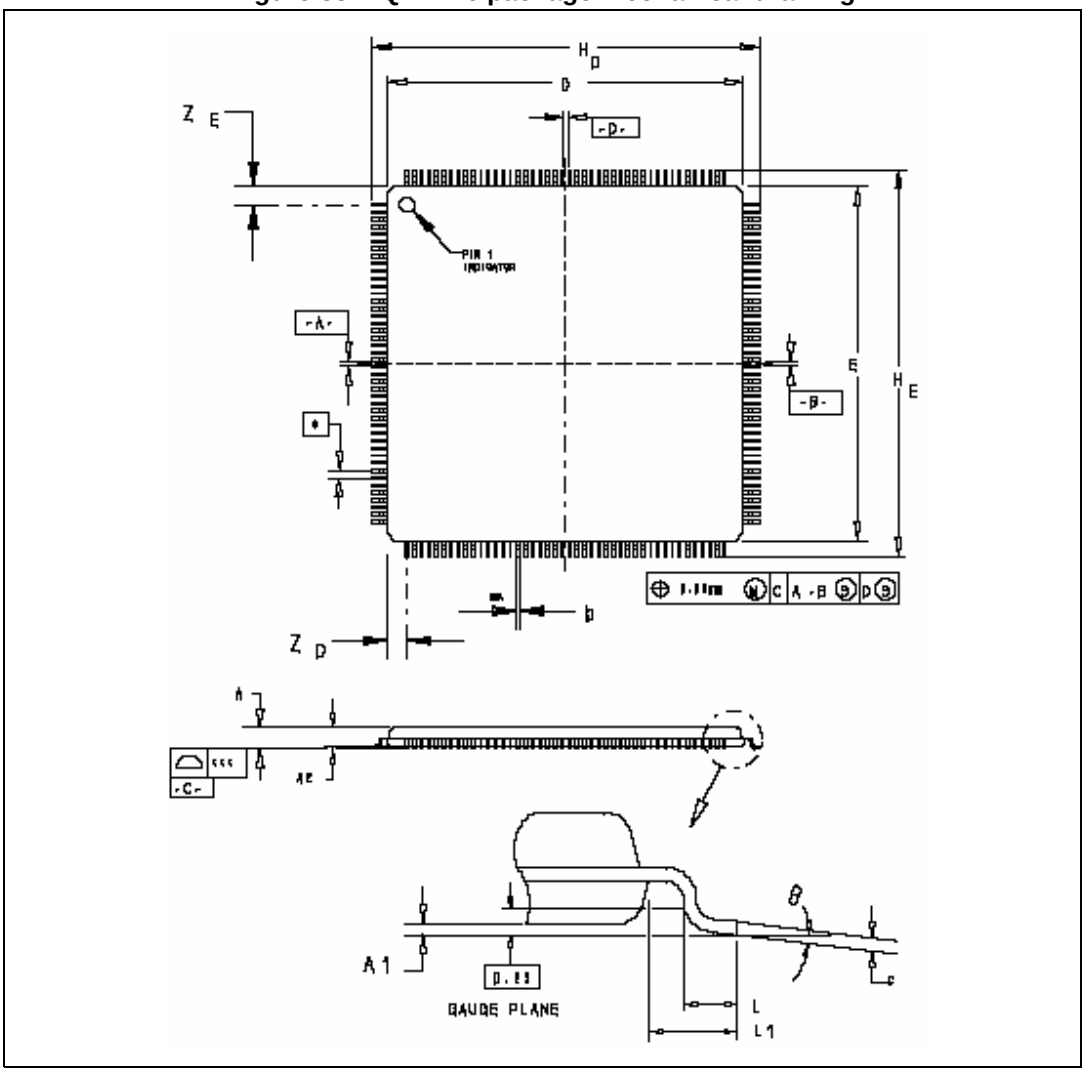

Distributor of STMicroelectronics: Excellent Integrated System Limited
Datasheet of SPC560B54L3C6E0Y - IC MCU 32BIT 768KB FLASH 100LQFP
Contact us: sales@integrated-circuit.com Website: www.integrated-circuit.com

Table 51. LQFP176 mechanical data(1)

Symbol	mm			inches(2)		
	Min	Typ	Max	Min	Typ	Max
A	1.400	—	1.600		—	0.063
A1	0.050	—	0.150	0.002	—	
A2	1.350	—	1.450	0.053	—	0.057
b	0.170	—	0.270	0.007	—	0.011
C	0.090	—	0.200	0.004	—	0.008
D	23.900	—	24.100	0.941	—	0.949
E	23.900	—	24.100	0.941	—	0.949
e	—	0.500	—	—	0.020	—
HD	25.900	—	26.100	1.020	—	1.028
HE	25.900	—	26.100	1.020	—	1.028
L(3)	0.450	—	0.750	0.018	—	0.030
L1	—	1.000	—	—	0.039	—
ZD	—	1.250	—	—	0.049	—
ZE	—	1.250	—	—	0.049	—
q	0 °	—	7 °	0 °	—	7 °
Tolerance	mm			inches		
ccc	0.080			0.0031		

1. Controlling dimension: millimeter.
2. Values in inches are converted from mm and rounded to 4 decimal digits.
3. L dimension is measured at gauge plane at 0.25 mm above the seating plane.

Distributor of STMicroelectronics: Excellent Integrated System Limited
Datasheet of SPC560B54L3C6E0Y - IC MCU 32BIT 768KB FLASH 100LQFP
Contact us: sales@integrated-circuit.com Website: www.integrated-circuit.com

5.2.2 LQFP144

Figure 34. LQFP144 package mechanical drawing

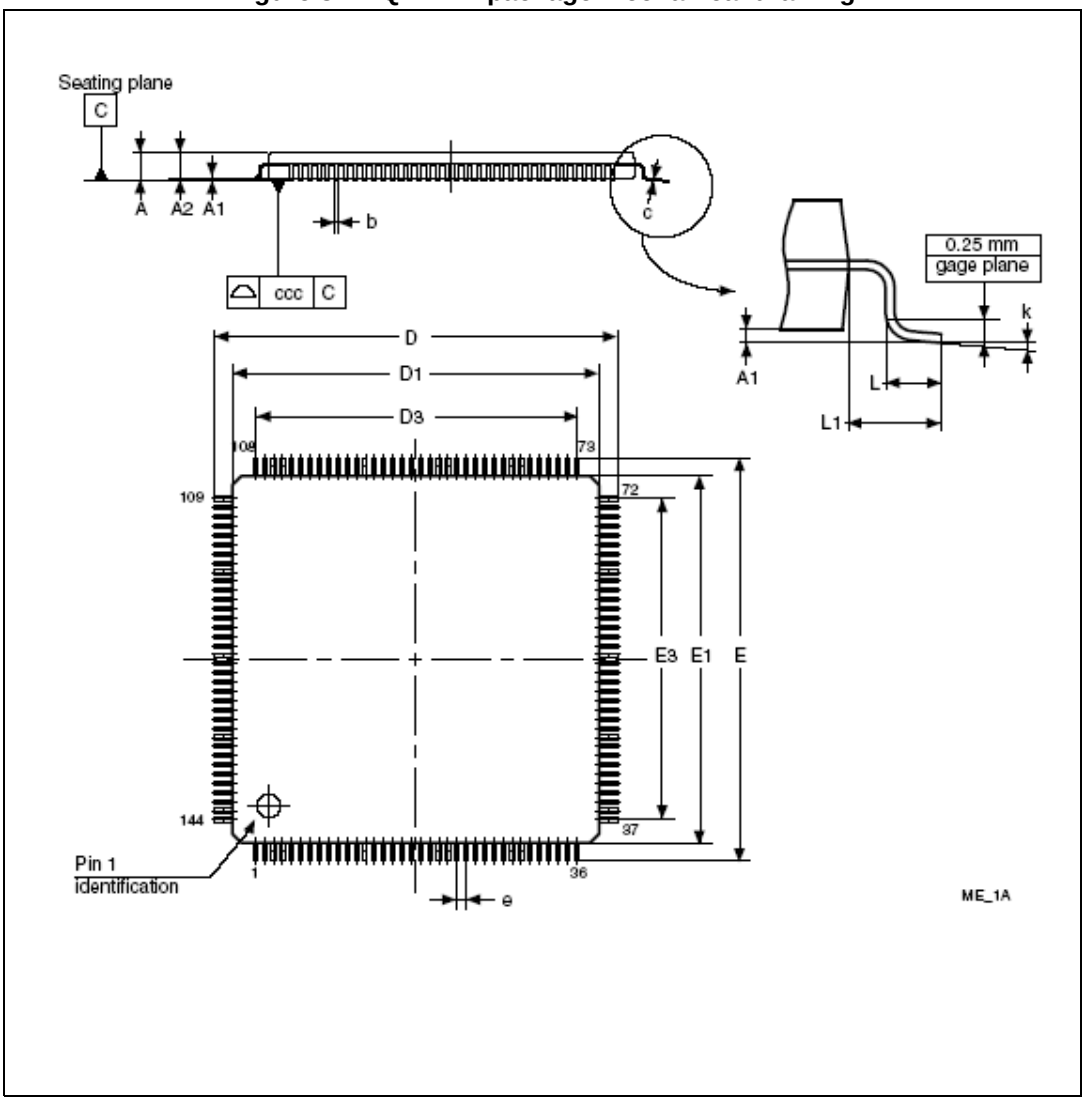

Table 52. LQFP144 mechanical data

Symbol	mm			inches[1]		
	Min	Typ	Max	Min	Typ	Max
A	—	—	1.600	—	—	0.0630
A1	0.050	—	0.150	0.0020	—	0.0059
A2	1.350	1.400	1.450	0.0531	0.0551	0.0571
b	0.170	0.220	0.270	0.0067	0.0087	0.0106
c	0.090	—	0.200	0.0035	—	0.0079
D	21.800	22.000	22.200	0.8583	0.8661	0.8740

Distributor of STMicroelectronics: Excellent Integrated System Limited
Datasheet of SPC560B54L3C6E0Y - IC MCU 32BIT 768KB FLASH 100LQFP
Contact us: sales@integrated-circuit.com Website: www.integrated-circuit.com

Table 52. LQFP144 mechanical data (continued)

Symbol	mm			inches[1]		
	Min	Typ	Max	Min	Typ	Max
D1	19.800	20.000	20.200	0.7795	0.7874	0.7953
D3	—	17.500	—	—	0.6890	—
E	21.800	22.000	22.200	0.8583	0.8661	0.8740
E1	19.800	20.000	20.200	0.7795	0.7874	0.7953
E3	—	17.500	—	—	0.6890	—
e	—	0.500	—	—	0.0197	—
L	0.450	0.600	0.750	0.0177	0.0236	0.0295
L1	—	1.000	—	—	0.0394	—
k	0.0 °	3.5 °	7.0°	3.5 °	0.0 °	7.0 °
Tolerance	mm			inches		
ccc	0.080			0.0031		

1. Values in inches are converted from mm and rounded to 4 decimal digits.

Distributor of STMicroelectronics: Excellent Integrated System Limited
Datasheet of SPC560B54L3C6E0Y - IC MCU 32BIT 768KB FLASH 100LQFP
Contact us: sales@integrated-circuit.com Website: www.integrated-circuit.com

5.2.3 LQFP100

Figure 35. LQFP100 package mechanical drawing

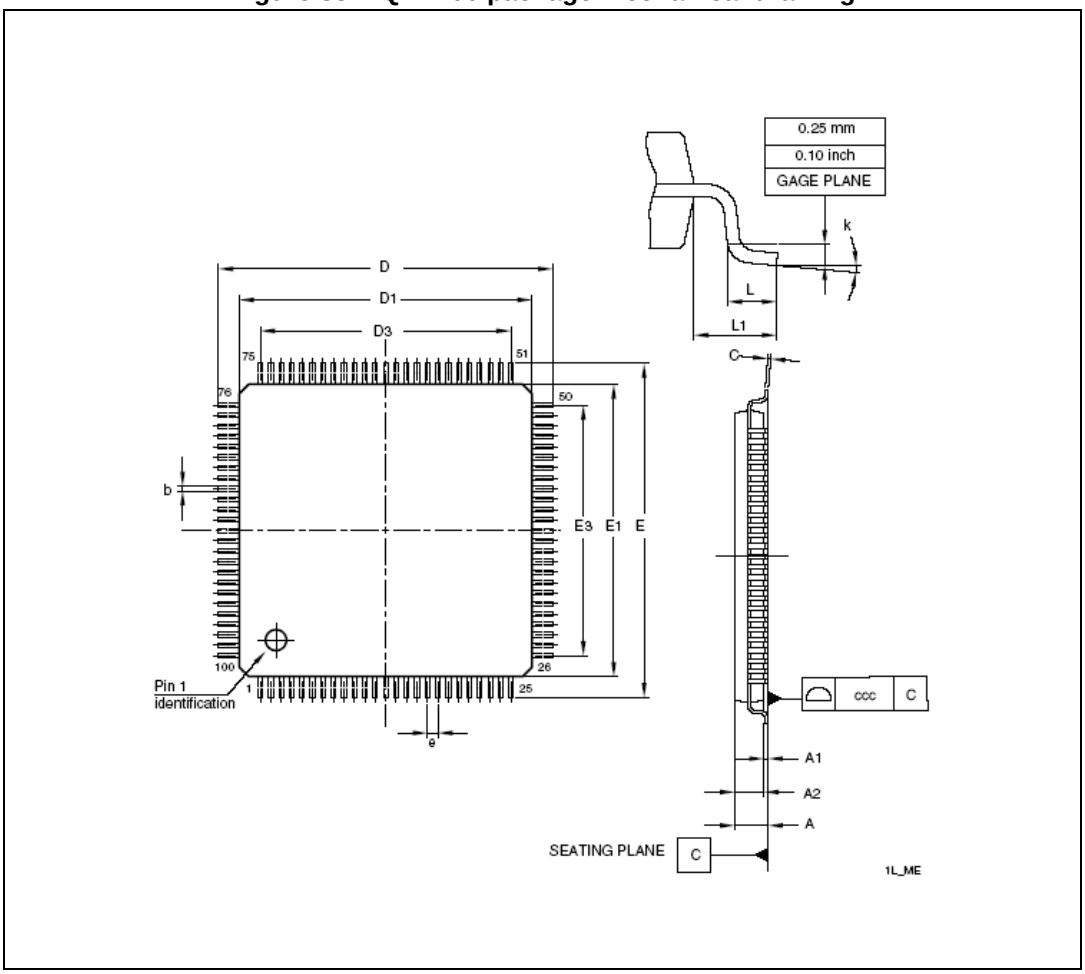

Table 53. LQFP100 mechanical data

Symbol	mm			inches[1]		
	Min	Typ	Max	Min	Typ	Max
A	—	—	1.600	—	—	0.0630
A1	0.050	—	0.150	0.0020	—	0.0059
A2	1.350	1.400	1.450	0.0531	0.0551	0.0571
b	0.170	0.220	0.270	0.0067	0.0087	0.0106
c	0.090	—	0.200	0.0035	—	0.0079
D	15.800	16.000	16.200	0.6220	0.6299	0.6378
D1	13.800	14.000	14.200	0.5433	0.5512	0.5591
D3	—	12.000	—	—	0.4724	—
E	15.800	16.000	16.200	0.6220	0.6299	0.6378

Distributor of STMicroelectronics: Excellent Integrated System Limited
Datasheet of SPC560B54L3C6E0Y - IC MCU 32BIT 768KB FLASH 100LQFP
Contact us: sales@integrated-circuit.com Website: www.integrated-circuit.com

Table 53. LQFP100 mechanical data (continued)

Symbol	mm			inches[1]		
	Min	Typ	Max	Min	Typ	Max
E1	13.800	14.000	14.200	0.5433	0.5512	0.5591
E3	—	12.000	—	—	0.4724	—
e	—	0.500	—	—	0.0197	—
L	0.450	0.600	0.750	0.0177	0.0236	0.0295
L1	—	1.000	—	—	0.0394	—
k	0.0 °	3.5 °	7.0 °	0.0 °	3.5 °	7.0 °
Tolerance	mm			inches		
ccc	0.080			0.0031		

1. Values in inches are converted from mm and rounded to 4 decimal digits.

Distributor of STMicroelectronics: Excellent Integrated System Limited
Datasheet of SPC560B54L3C6E0Y - IC MCU 32BIT 768KB FLASH 100LQFP
Contact us: sales@integrated-circuit.com Website: www.integrated-circuit.com

5.2.4 LBGA208

Figure 36. LBGA208 package mechanical drawing

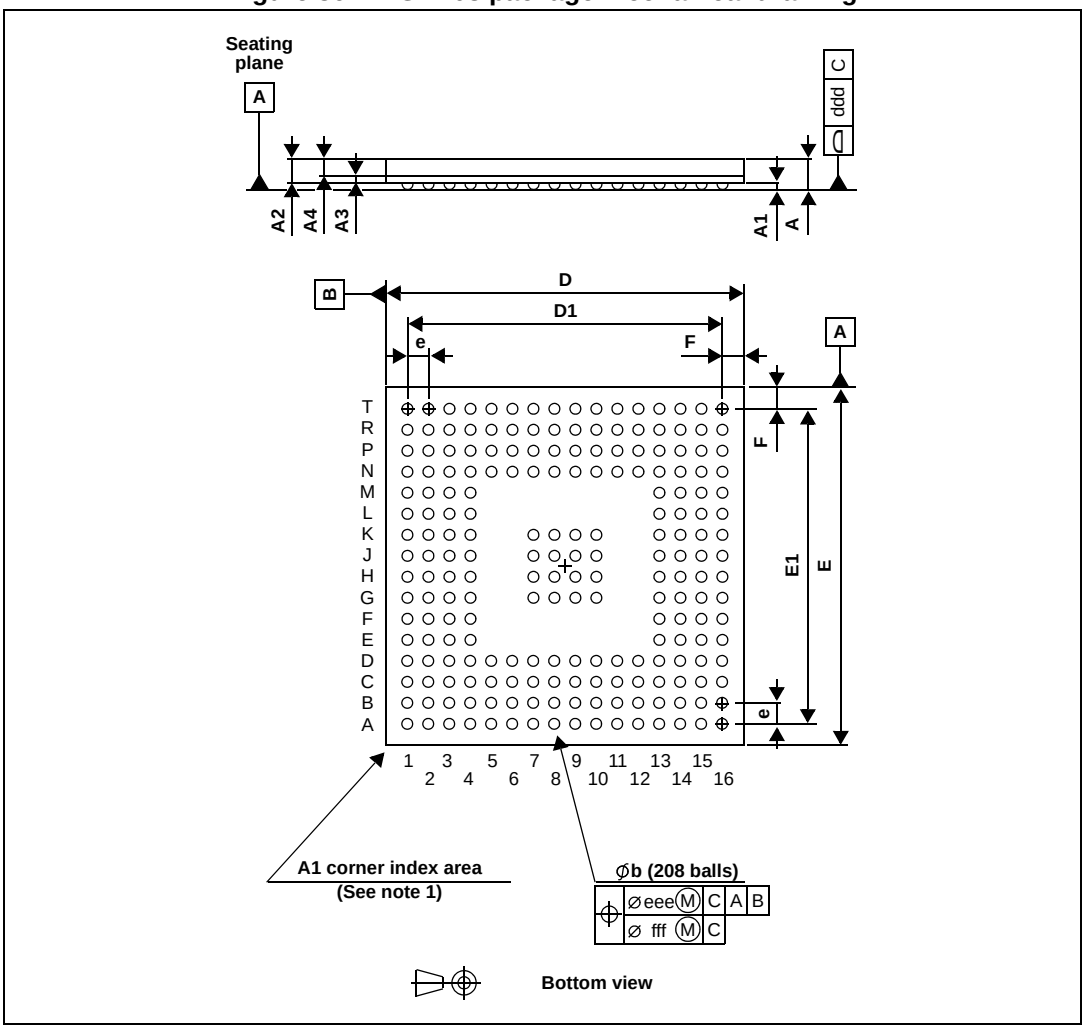

1. The terminal A1 corner must be identified on the top surface by using a corner chamfer, ink or metalized markings, or other feature of package body or integral heatslug.
A distinguishing feature is allowable on the bottom surface of the package to identify the terminal A1 corner. Exact shape of each corner is optional.

Table 54. LBGA208 mechanical data

Symbol	mm			inches[1]			Notes
	Min	Typ	Max	Min	Typ	Max	
A	—	—	1.70	—	—	0.0669	(2)
A1	0.30	—	—	0.0118	—	—	—
A2	—	1.085	—	—	0.0427	—	—
A3	—	0.30	—	—	0.0118	—	—
A4	—	—	0.80	—	—	0.0315	—
b	0.50	0.60	0.70	0.0197	0.0236	0.0276	(3)

Distributor of STMicroelectronics: Excellent Integrated System Limited
Datasheet of SPC560B54L3C6E0Y - IC MCU 32BIT 768KB FLASH 100LQFP
Contact us: sales@integrated-circuit.com Website: www.integrated-circuit.com

Table 54. LBGA208 mechanical data (continued)

Symbol	mm			inches[1]			Notes
	Min	Typ	Max	Min	Typ	Max	
D	16.80	17.00	17.20	0.6614	0.6693	0.6772	—
D1	—	15.00	—	—	0.5906	—	—
E	16.80	17.00	17.20	0.6614	0.6693	0.6772	—
E1	—	15.00	—	—	0.5906	—	—
e	—	1.00	—	—	0.0394	—	—
F	—	1.00	—	—	0.0394	—	—
ddd	—	—	0.20	—	—	0.0079	
eee	—	—	0.25	—	—	0.0098	(4)
fff	—	—	0.10	—	—	0.0039	(5)

1. Values in inches are converted from mm and rounded to 4 decimal digits.
2. LBGA stands for **L**ow profile **B**all **G**rid **A**rray.
   – Low profile: The total profile height (Dim A) is measured from the seating plane to the top of the component
   – The maximum total package height is calculated by the following methodology:
   A2 (Typ) + A1 (Typ) + $\sqrt{(A1^2 + A3^2 + A4^2}$ tolerance values)
   – Low profile: 1.20 mm < A ≤ 1.70 mm
3. The typical ball diameter before mounting is 0.60mm.
4. The tolerance of position that controls the location of the pattern of balls with respect to datums A and B.
   For each ball there is a cylindrical tolerance zone eee perpendicular to datum C and located on true position with respect to datums A and B as defined by e. The axis perpendicular to datum C of each ball must lie within this tolerance zone.
5. The tolerance of position that controls the location of the balls within the matrix with respect to each other.
   For each ball there is a cylindrical tolerance zone fff perpendicular to datum C and located on true position as defined by e.
   The axis perpendicular to datum C of each ball must lie within this tolerance zone.
   Each tolerance zone fff in the array is contained entirely in the respective zone eee above.
   The axis of each ball must lie simultaneously in both tolerance zones.

Distributor of STMicroelectronics: Excellent Integrated System Limited
Datasheet of SPC560B54L3C6E0Y - IC MCU 32BIT 768KB FLASH 100LQFP
Contact us: sales@integrated-circuit.com Website: www.integrated-circuit.com

6 Ordering information

Figure 37. Commercial product code structure

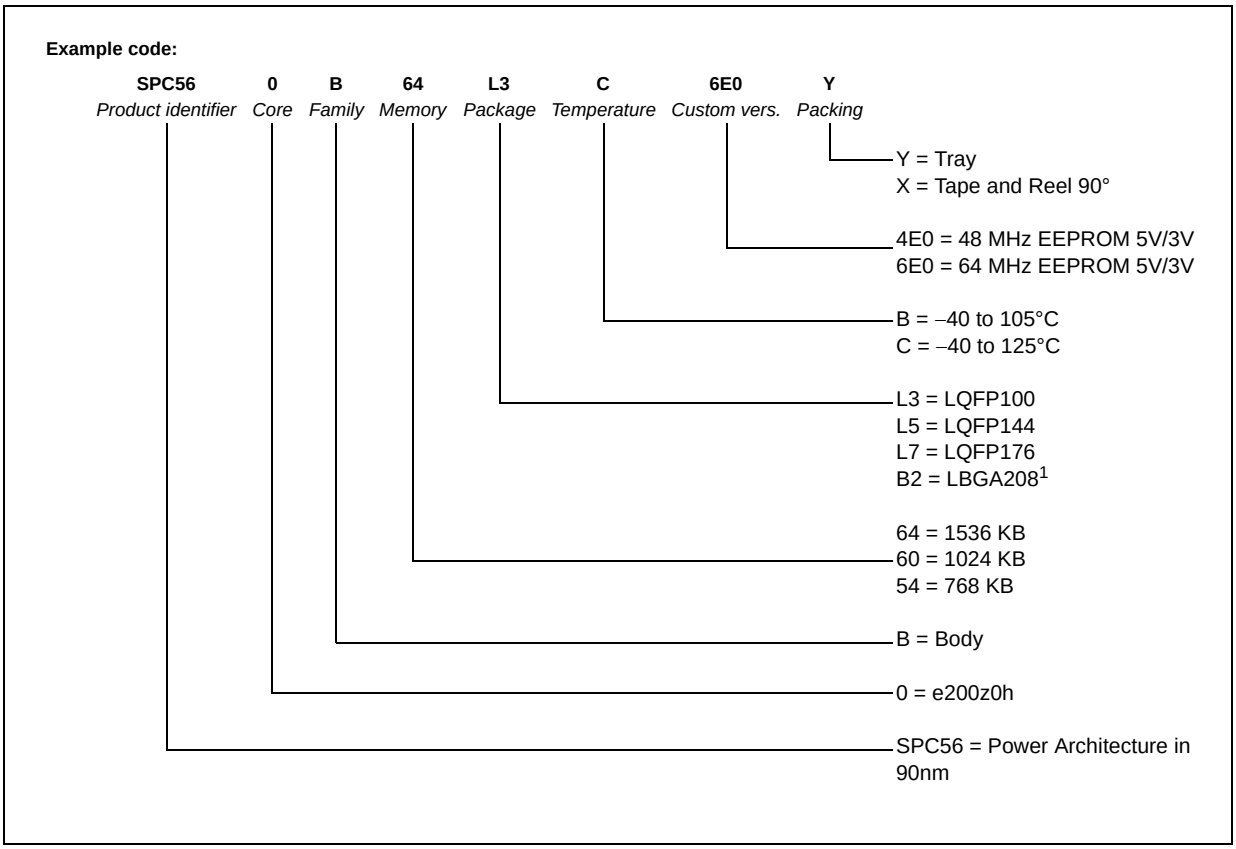

1. LBGA208 is available only as development package for Nexus2+.

Distributor of STMicroelectronics: Excellent Integrated System Limited
Datasheet of SPC560B54L3C6E0Y - IC MCU 32BIT 768KB FLASH 100LQFP
Contact us: sales@integrated-circuit.com Website: www.integrated-circuit.com

Appendix A Abbreviations

Table 55 lists abbreviations used but not defined elsewhere in this document.

Table 55. Abbreviations

Abbreviation	Meaning
CMOS	Complementary metal oxide semiconductor
CPHA	Clock phase
CPOL	Clock polarity
CS	Peripheral chip select
EVTO	Event out
MCKO	Message clock out
MDO	Message data out
MSEO	Message start/end out
MTFE	Modified timing format enable
SCK	Serial communications clock
SOUT	Serial data out
TBD	To be defined
TCK	Test clock input
TDI	Test data input
TDO	Test data output
TMS	Test mode select

Distributor of STMicroelectronics: Excellent Integrated System Limited
Datasheet of SPC560B54L3C6E0Y - IC MCU 32BIT 768KB FLASH 100LQFP
Contact us: sales@integrated-circuit.com Website: www.integrated-circuit.com

Revision history

Table 56 summarizes revisions to this document.

Table 56. Revision history

Date	Revision	Changes
12-Jan-2009	1	Initial release
07-Dec-2009	2	Updated Device Summary-added LBGA208 Part number Updated Features Replaced 27 IRQs in place of 23 ADC features External Ballast resistor support conditions Updated device summary-added 208 BGA details Updated block diagram to include WKUP Updated block diagram to include 5 ch ADC 12 -bit Updated Block summary table Updated LQFP 144, 176 and 100 pinouts. Applied new naming convention for ADC signals as ADCx_P[x] and ADCx_S[x] Section 1, “General description Updated SPC560B54/60/64 device comparison table Updated block diagram-aligned with 512k Updated block summary-aligned with 512k Section 2, “Package pinouts Updated 100,144,176,208 packages according to cut2.0 changes Added Section 3.5.1, “External ballast resistor recommendations Added NVUSRO [WATCHDOG_EN] field description Updated Absolute maximum ratings Updated LQFP thermal characteristics Updated I/O supply segments Updated Voltage regulator capacitance connection Updated Low voltage monitor electrical characteristics Updated Low voltage power domain electrical characteristics Updated DC electrical characteristics Updated Program/Erase specifications Updated Conversion characteristics (10 bit ADC) Updated FMPLL electrical characteristics Updated Fast RC oscillator electrical characteristics-aligned with SPC560B4x/B5x/C4x/C5x Updated On-chip peripherals current consumption Updated ADC characteristics and error definitions diagram Updated ADC conversion characteristics (10 bit and 12 bit) Added ADC characteristics and error definitions diagram for 12 bit ADC

Distributor of STMicroelectronics: Excellent Integrated System Limited
Datasheet of SPC560B54L3C6E0Y - IC MCU 32BIT 768KB FLASH 100LQFP
Contact us: sales@integrated-circuit.com Website: www.integrated-circuit.com

Table 56. Revision history (continued)

Date	Revision	Changes
23-Feb-2010	3	Updated Features Updated block diagram to connect peripherals to pad I/O Updated block summary to include ADC 12-bit Updated 144, 176 and 100 pinouts to adjust format issues Table 26 Flash module life-retention value changed from 1-5 to 5 yrs Minor editing changes
13-Sep-2010	4	Editorial changes and improvements. Cover page: removed LBGA208 package silhouette Updated “Features“ section *Table 2*: updated footnote concerning LBGA208 In the block diagram: – Added “5ch 12-bit ADC“ block. – Updated Legend. – Added “Interrupt request with wakeup functionality” as an input to the WKPU block. *Figure 2*: removed alternate functions *Figure 3*: removed alternate functions *Figure 4*: removed alternate functions *Table 3*: added contents concerning the following blocks: CMU, eDMA, ECSM, MC_ME, MC_PCU, NMI, SSCM, SWT and WKPU Added Section 3.2, Pin muxing *Section 4: Electrical characteristics*: removed “Caution” note *Section 4.2: NVUSRO register*: removed “NVUSRO[WATCHDOG_EN] field description“ section *Table 12*: V_{IN}: removed min value in “relative to V_{DD}” row *Table 13* – TV_{DD}: contents merged into one row – V_{DD_BV}: changed min value in “relative to V_{DD}” row *Section 4.5: Thermal characteristics* – *Section 4.5.1: External ballast resistor recommendations*: added new paragraph about power supply – *Table 15*: added $R_{\theta JB}$ and $R_{\theta JC}$ rows – Removed “LBGA208 thermal characteristics” table *Table 16*: rewrote parameter description of W_{FI} and W_{NFI} *Section 4.6.5: I/O pad current specification* – Removed I_{DYNSEG} information – Updated “I/O supply segments” table *Table 23*: removed I_{DYNSEG} row Added *Table 24*

Distributor of STMicroelectronics: Excellent Integrated System Limited
Datasheet of SPC560B54L3C6E0Y - IC MCU 32BIT 768KB FLASH 100LQFP
Contact us: sales@integrated-circuit.com Website: www.integrated-circuit.com

Table 56. Revision history (continued)

Date	Revision	Changes
13-Sep-2010	4 (cont.)	*Table 26* – Updated all values – Removed $I_{VREGREF}$ and $I_{VREDLVD12}$ rows – Added the footnote “The duration of the in-rush current depends on the capacitance placed on LV pins. BV decaps must be sized accordingly. Refer to IMREG value for minimum amount of current to be provided in cc.” to the I_{DD_BV} specification. *Table 27* – Updated V_{PORH} min/max value – Updated $V_{LVDLVCORL}$ min value Updated *Table 28* *Table 29* – $T_{dwprogram}$: added initial max value – Inserted T_{eslat} row *Table 30*: removed the “To be confirmed” footnote In the “Crystal oscillator and resonator connection scheme” figure, removed R_P. *Table 40* – Removed g_{mSXOSC} row – $I_{SXOSCBIAS}$: added min/typ/max value *Table 41*: – Added f_{VCO} row – Added Δt_{STJIT} row *Table 42* – $I_{FIRCPWD}$: removed row for T_A = 55 °C – Updated T_{FIRCSU} row *Table 45*: Added two rows: $I_{ADC0pwd}$ and $I_{ADC0run}$ *Table 46* – Added two rows: $I_{ADC1pwd}$ and $I_{ADC1run}$ – Updated values of f_{ADC_1} and t_{ADC1_PU} – Updated t_{ADC1_C} row Updated *Table 47* Updated *Table 48* Added *Table 55*
29-Oct- 2010	5	Removed “Preliminary—Subject to Change Without Notice” marking. This data sheet contains specifications based on characterization data. Updated *Table 55* Added *Table 56* Updated *Figure 37*

Distributor of STMicroelectronics: Excellent Integrated System Limited
Datasheet of SPC560B54L3C6E0Y - IC MCU 32BIT 768KB FLASH 100LQFP
Contact us: sales@integrated-circuit.com Website: www.integrated-circuit.com

Table 56. Revision history (continued)

Date	Revision	Changes
12-Sep- 2011	6	Editorial and formatting changes throughout Replaced instances of “e200z0” with “e200z0h” Device family comparison table: – added 1 MB code flash LQFP100 version – added 1.5 MB code flash LQFP144 version – removed 768 KB code flash LQFP176 version – changed LINFlex count for 144-pin LQFP—was ‘6’; is ‘8’ – changed LINFlex count for 176-pin LQFP—was ‘8’; is ‘10’ – replaced 105 °C with 125 °C in footnote 2 SPC560B54/6x block diagram: added GPIO and VREG to legend SPC560B54/6x series block summary: added acronym “JTAGC”; in WKPU function changed “up to 18 external sources” to “up to 27 external sources” LQFP144 pin configuration: for pins 37–72, restored the pin labels that existed prior to 27 July 2010 LQFP176 pin configuration: corrected name of pin 4: was EPC[15]; is PC[15] Added following sections: – Pad configuration during reset phases – Pad configuration during standby mode exit – Voltage supply pins – Pad types – System pins – Functional port pins – Nexus 2+ pins Section “NVUSRO register”: edited content to separate configuration into electrical parameters and digital functionality; updated footnote describing default value of ‘1’ in field descriptions NVUSRO[PAD3V5V] and NVUSRO[OSCILLATOR_MARGIN] Added section “NVUSRO[WATCHDOG_EN] field description” Tables “Absolute maximum ratings” and “Recommended operating conditions (3.3 V)”: replaced “VSS_HV_ADC0, VSS_HV_ADC1” with “VDD_HV_ADC0, VDD_HV_ADC1” in V_{DD_ADC} parameter description “Recommended operating conditions (5.0 V)” table: replaced “VSS_HV_ADC0, VSS_HV_ADC1” with “VDD_HV_ADC0, VDD_HV_ADC1” in V_{DD_ADC} parameter description; changed 3.6V to 3.0V in footnote 2 Section “External ballast resistor recommendations”: replaced “low voltage monitor” with “low voltage detector (LVD)” “I/O input DC electrical characteristics” table: updated I_{LKG} characteristics “MEDIUM configuration output buffer electrical characteristics” table: changed “I_{OH} = 100 µA” to “I_{OL} = 100 µA” in V_{OL} conditions I/O weight: updated table (includes replacing instances of bit “SRE” with “SRC”) “Reset electrical characteristics” table: updated parameter classification for $\|I_{WPU}\|$ Updated voltage regulator electrical characteristics Section “Low voltage detector electrical characteristics”: changed title (was “Voltage monitor electrical characteristics”); changed “as well as four low voltage detectors” to “as well as five low voltage detectors”; added event status flag names found in RGM chapter of device reference manual to POR module and LVD descriptions; replaced instances of “Low voltage monitor” with “Low voltage detector”; updated values for $V_{LVDLVBKPL}$ and $V_{LVDLVCORL}$ Updated section “Power consumption”

Distributor of STMicroelectronics: Excellent Integrated System Limited
Datasheet of SPC560B54L3C6E0Y - IC MCU 32BIT 768KB FLASH 100LQFP
Contact us: sales@integrated-circuit.com Website: www.integrated-circuit.com

Table 56. Revision history (continued)

Date	Revision	Changes
12-Sep- 2011 (continued)	6 (continued)	Section “Program/erase characteristics”: removed table “FLASH_BIU settings vs. frequency of operation” and associated introduction “Program and erase specifications” table: updated symbols PFCRn settings vs. frequency of operation: replaced “FLASH_BIU” with “PFCRn” in table title; updated field names and frequencies “Flash power supply DC electrical characteristics” table: deleted footnote 2 Crystal oscillator and resonator connection scheme: inserted footnote about possibly requiring a series resistor Fast external crystal oscillator (4 to 16 MHz) electrical characteristics: updated parameter classification for $V_{FXOSCOP}$ Slow external crystal oscillator (32 kHz) electrical characteristics: updated footnote 1 Section “ADC electrical characteristics”: updated symbols for offset error and gain error Section “Input impedance and ADC accuracy”: changed “V_A/V_{A2}” to “V_{A2}/V_A” in Equation 11 ADC input leakage current: updated I_{LKG} characteristics ADC_0 conversion characteristics table: replaced instances of “ADCx_conf_sample_input” with “INPSAMP”; replaced instances of “ADCx_conf_comp” with “INPCMP ADC_1 characteristic and error definitions: replaced “AVDD” with “V_{DD_ADC}” ADC_1 conversion characteristics table: replaced instances of “ADCx_conf_sample_input” with “INPSAMP”; replaced instances of “ADCx_conf_comp” with “INPCMP” Updated “On-chip peripherals current consumption” table Removed order codes tables.
18-Sep-2013	7	Updated Disclaimer.
05-May-2014	8	*Table 13: Recommended operating conditions (3.3 V)*, added minimum value of T_{VDD} and footnote about it. *Table 14: Recommended operating conditions (5.0 V)*, added minimum value of T_{VDD} and footnote about it. *Table 21: Output pin transition times*, replaced T_{tr} with t_{tr} *Table 25: Reset electrical characteristics*, replaced T_{tr} with t_{tr} Updated *Section 4.17.2: Input impedance and ADC accuracy* *Table 27: Low voltage detector electrical characteristics*, changed $V_{LVDHV3L}$(min) and $V_{LVDHV3BL}$(min) from 2.7 V to 2.6 V. *Table 29: Program and erase specifications*, added footnote about t_{ESRT} *Table 41: FMPLL electrical characteristics*, deleted footnote relative to maximum value of f_{CPU} *Table 45: ADC_0 conversion characteristics (10-bit ADC_0)*, changed $I_{ADC0run}$ value from 40 mA to 5 mA. *Table 48: DSPI characteristics*, in the heading row, replaced DSPI0/DSPI1/DSPI5/DSPI6 with DSPI0/DSPI1/DSPI3/DSPI5.
22-Jan-2016	9	In *Table 1: Device summary*, added SPC560B64L3 for 1.5 MB code flash devices. In *Table 2: SPC560B54/6x family comparison*, added column relating to “LQFP100” package in SPC560B64 devices. In *Table 28: Power consumption on VDD_BV and VDD_HV*: – changed footnote 2 “Running consumption does not include I/Os...” to “I_{DDMAX} is drawn only from the VDD_BV pin. Running consumption does not include I/Os...” – changed footnote 4 “RUN current measured with...” to “I_{DDRUN} is drawn only from the VDD_BV pin. RUN current measured with...”

Distributor of STMicroelectronics: Excellent Integrated System Limited
Datasheet of SPC560B54L3C6E0Y - IC MCU 32BIT 768KB FLASH 100LQFP
Contact us: sales@integrated-circuit.com Website: www.integrated-circuit.com

IMPORTANT NOTICE – PLEASE READ CAREFULLY

STMicroelectronics NV and its subsidiaries (“ST”) reserve the right to make changes, corrections, enhancements, modifications, and improvements to ST products and/or to this document at any time without notice. Purchasers should obtain the latest relevant information on ST products before placing orders. ST products are sold pursuant to ST’s terms and conditions of sale in place at the time of order acknowledgement.

Purchasers are solely responsible for the choice, selection, and use of ST products and ST assumes no liability for application assistance or the design of Purchasers’ products.

No license, express or implied, to any intellectual property right is granted by ST herein.

Resale of ST products with provisions different from the information set forth herein shall void any warranty granted by ST for such product.

ST and the ST logo are trademarks of ST. All other product or service names are the property of their respective owners.

Information in this document supersedes and replaces information previously supplied in any prior versions of this document.

© 2016 STMicroelectronics – All rights reserved