Excellent Integrated System Limited

Stocking Distributor

Click to view price, real time Inventory, Delivery & Lifecycle Information:

NXP Semiconductors
MWPR1516CFM

For any questions, you can email us directly:
sales@integrated-circuit.com

Distributor of NXP Semiconductors: Excellent Integrated System Limited
Datasheet of MWPR1516CFM - IC RECEIVER 16KB FLASH 32QFN
: www.integrated-circuit.com

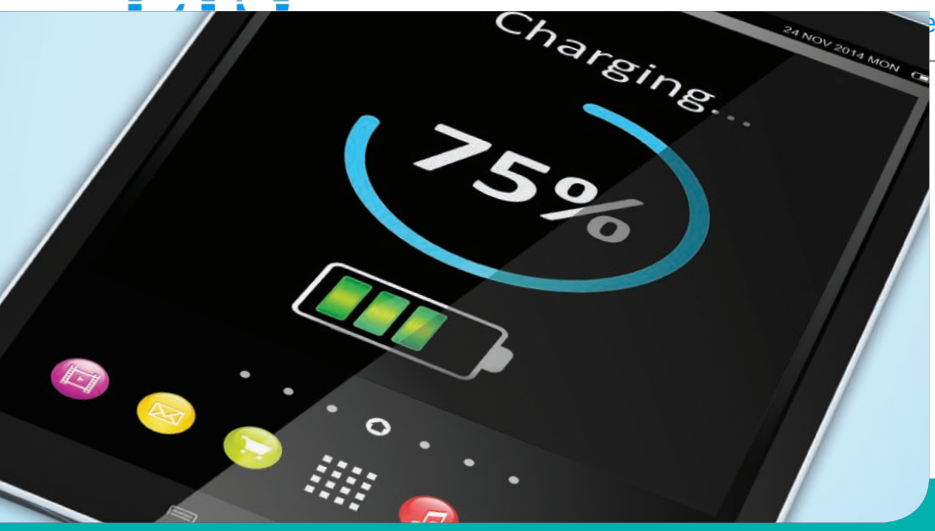

15 W
WPC Compliant
solutions

WPR1516 Medium Power Wireless Charging Receiver

The WPR1516 wireless charging receiver IC family and reference designs support up to 15 W charging power.

TARGET APPLICATIONS

- Smart phones
- Tablets
- Walkie talkies
- Portable scanners
- Power tools
- Portable instruments
- Portable medical devices

This new level of performance supports larger form factors, including the latest smart phones and tablet devices that require faster charging times. This family adheres to the Wireless Power Consortium (WPC) and Medium Power Working Group (MPWG) specification and has the potential to support other future standards. With such a high level of integration, the WPR1516 IC will drive smaller printed circuit board (PCB) form factor designs and offers the possibility for applications to do thermal design based on the application requirement.

The WPR1516 IC is based on the ARM® Cortex®-M0+ core and includes frequency shift keying (FSK) and CNC features allowing for easy development of bi-directional communication architecture between a transmitter and receiver. A PGA handles small signals which can easily detect the power loss of the system to achieve system-level foreign object detection (FOD). A USB/Adapter switcher sets the priority between wired and wireless charging.

The WPC1516 IC is offered in both QFN and WLCSP package options ideal for both industrial and consumer applications.

PACKAGE OPTIONS

Part Number	MWPR1516-CFM	MWPR1516-CALR
Max. Freq. (MHz)	24	24
Pin Count	32	36
Package	QFN	WLCSP
Size	5 x 5 x 0.65 mm	3.1 x 3 x 0.6 mm

DEVELOPMENT TOOLS

Ecosystem of Wireless Charging

Our membership in the WPC gives us access to essential specifications and IPs within the organization. This access informs our wireless charging development roadmap for Type A and Type B transmitter and receiver solutions. We supports customized solutions according to differentiated customer requirements. The medium power wireless receiver and transmitter reference designs contain optimized software and are directly supported by our technical solutions team.

Integrated Development Environment (IDE)

IAR Embedded Workbench® Keil® MDK

WPR1500-LDO (40 x 40 mm)

Supports 5V/3A output following the WPC "Qi" specification. With only rectifier and LDO MOSFET outside WPR1516 for system thermal design. Most optimized BOM cost.

WPR1500-BUCK (40 x 40 mm)

Output with Buck architecture which approves 5V/3A following WPC "Qi" specification, and with capability to support other output voltage and current for various battery configuration.

WPR1516 FEATURES AND BENEFITS

Features	Benefits
Internal LDO Supports Operation Voltage of 3.5 – 20 V	Spans applications with different charging voltage for various quantities of internal battery cells (single/dual/triple cells)
Flash-based IC Based on ARM Cortex-M0+ Core	Provides a popular development ecosystem and allows for customized differentiation
Defined Architecture Based on WPC MPWG Specification	Any "Qi" compliant transmitter can charge WPR1516 receiver solutions
Specially Designed FSK and CNC Models	Eases MPWG bi-directional communication development
12-bit ADC and PGA	Provides an easy solution for small system-level power loss detection to achieve FOD
USB/Adapter Switcher	Sets wired charging as higher priority to help save power
Industrial Internet Consortium and Universal Asynchronous Receiver/Transmitter (UART)	Supports the communication between the receiver and main application processor for security or content delivery
CMP Feature	Enables safe hardware over current or over voltage protection
Alternative Package Options	Easier to manufacturing and helps save PCB space
Reference Solution with our proprietary Embedded Wireless Charger Software Libraries	Provides customer design freedom, product differentiation and access to our essential proprietary IPs
FreeMaster UI	Friendly user interface to encourage user interaction
Pre-validated According to WPC Compliance Testing Procedure	Saves time to market and development costs

WPR1500-BUCK WIRELESS CHARGING RECEIVER REFERENCE PLATFORM BLOCK DIAGRAM

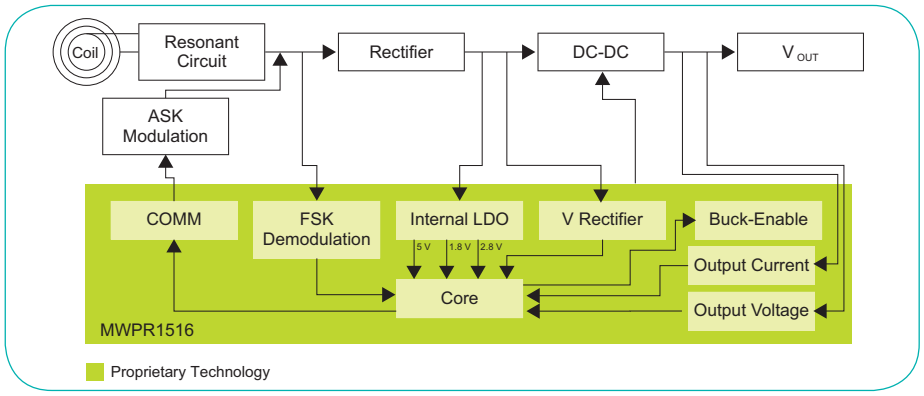

WPR1516 WIRELESS CHARGING RECEIVER IC BLOCK DIAGRAM

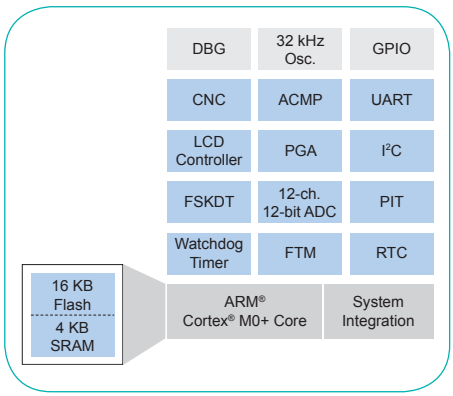

WPR1500-LDO WIRELESS CHARGING RECEIVER REFERENCE PLATFORM BLOCK DIAGRAM

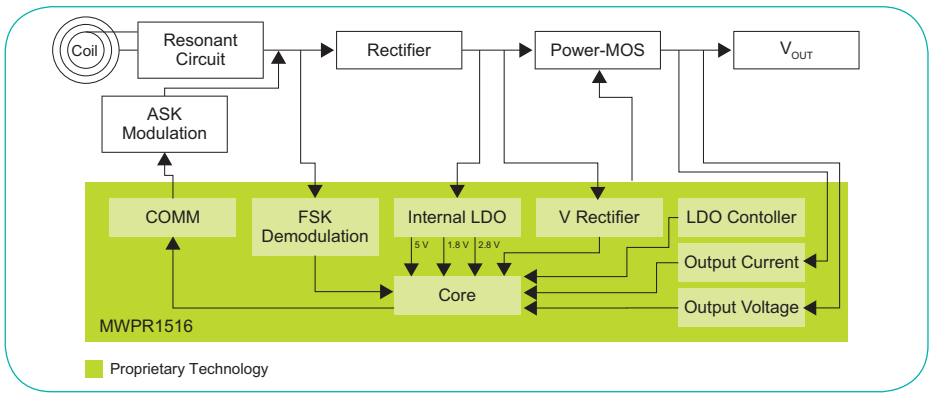

www.nxp.com/wirelesscharging

© 2014–2015 Freescale Semiconductor, Inc.
All other product or service names are the property of their respective owners. ARM, Cortex and Keil are registered trademarks of ARM Limited (or its subsidiaries) in the EU and/or elsewhere. All rights reserved.

Document Number: WPR1516FS REV 1