Excellent Integrated System Limited

Stocking Distributor

Click to view price, real time Inventory, Delivery & Lifecycle Information:

Molex Connector Corporation
0561168228

For any questions, you can email us directly:
sales@integrated-circuit.com

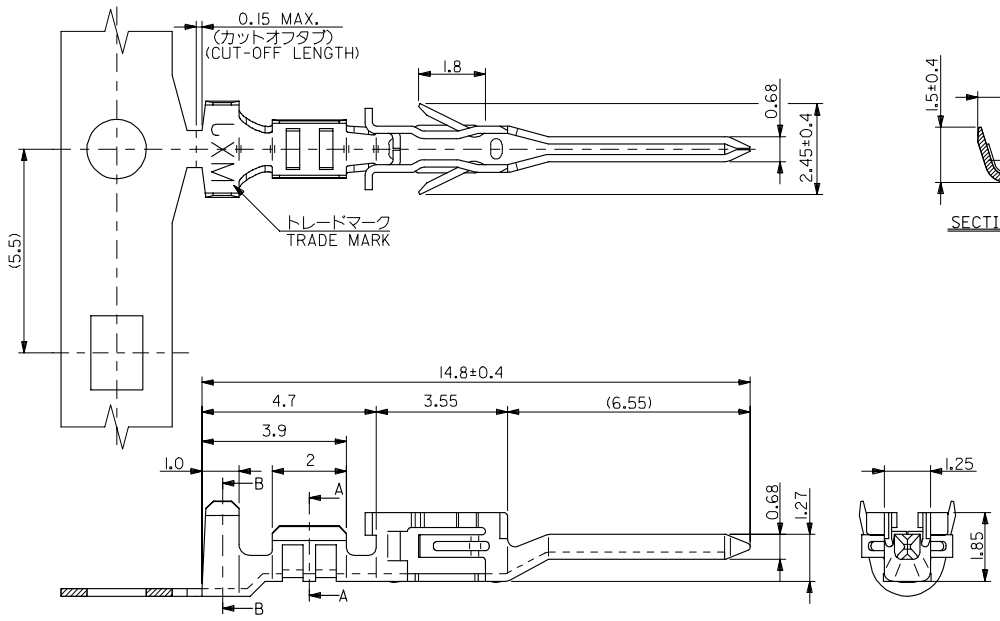

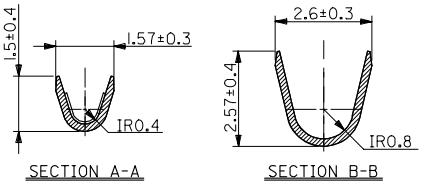

注記
NOTES

1. 材質
MATERIAL
りん青銅 (板厚：0.2)
PHOSPHOR BRONZE (THICKNESS : 0.2)
2. メッキ仕様
TERMINAL PLATING
接点部 ： 金メッキ0.25 μmMIN.
CONTACT AREA : GOLD 0.25 μm MIN.
圧着部 ： 錫メッキ 1.0μm MIN.
CRIMP AREA : TIN 1.0μm MIN.
下地メッキ ： ニッケルメッキ 2μm MIN.
UNDER PLATE : NICKEL 2μm MIN.
3. 適用電線：UL1007 , AWG #24～28
APPLICABLE WIRE RANGE : UL1007 , AWG #24～28
4. 被覆外径 ：ø1.6 MAX.
INSULATION EXTERNAL DIA : ø1.6 MAX.
5. 適用ハウジング： 51233-**** , 51234-****
APPLICABLE HOUSING : 51233-**** , 51234-****

バラ状 LOOSE	56116-8328	56116-8***
連鎖状 CHAIN	56116-8228	
端子形状 TERMINAL CONFIGURATION	MATERIAL No.	MODEL NO.

RELEASED EC NO: J2005-2545 2005/03/04	DESCRIPTION	GENERAL TOLERANCES (UNLESS SPECIFIED)	
DRWN:YSUGIURA01 2005/03/07		10 UNDER	±0.2
CHKD:MTANAKA 2005/03/07		10 OVER 30 UNDER	±0.25
APPR:NUKITA 2005/03/15		30 OVER	±0.3
		ANGULAR ±3 °	
0	REV	DRAFT WHERE APPLICABLE MUST REMAIN WITHIN DIMENSIONS	

DIMENSION STYLE: MM ONLY	SCALE: ---	DESIGN UNITS: METRIC	THIRD ANGLE PROJECTION
DRAWN BY: YSUGIURA	DATE: 2005/03/01	TITLE: COMPACT ROBOT CONN. (CRC) CRIMP PIN -LEAD FREE-	
CHECKED BY: MTANAKA	DATE: 2005/03/01		
APPROVED BY: NUKITA	DATE: 2005/03/01	molex MOLEX INCORPORATED	
MATERIAL NO.: SEE CHART		DOCUMENT NO.: SD-56116-004	SHEET NO.: 1 OF 1
SIZE: A3	THIS DRAWING CONTAINS INFORMATION THAT IS PROPRIETARY TO MOLEX INCORPORATED AND SHOULD NOT BE USED WITHOUT WRITTEN PERMISSION		

tb_frame_A3_J_ME_S Rev. D 2004/04/02 EN-02JA(021)