Excellent Integrated System Limited

Stocking Distributor

Click to view price, real time Inventory, Delivery & Lifecycle Information:

FCI
10128768-404KLF

For any questions, you can email us directly:
sales@integrated-circuit.com

Distributor of FCI: Excellent Integrated System Limited
Datasheet of 10128768-404KLF - SATA PLUG
Contact us: sales@integrated-circuit.com Website: www.integrated-circuit.com

PRODUCT NUMBER
10128768–Y04KLF

- INDICATES THE PRODUCT IS RoHS COMPATIBLE, SEE NOTE 4
- PACKAGING, SEE NOTE 3
- NUMBER OF CONTACTS
- 3= 0.76µm GOLD ON CONTACT AREAS
  2.0µm TIN MIN ON TAILS
  1.27µm Ni MIN UNDERPLATING
- 4= 2.0µm TIN MIN FULL PLATED
  1.27µm Ni MIN UNDERPLATING

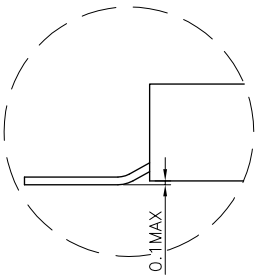

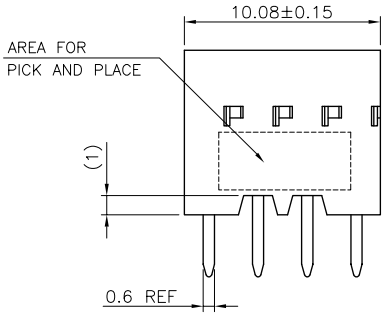

NOTES:

1 – HOUSING: HIGH TEMPERATURE THERMOPLASTIC GF FLAME RETARDANT PER UL 94 V–0, GREY COLOUR.

2 – TERMINAL MATERIAL: PHOSPHOR BRONZE.

3 – PACKAGING :
K = TAPE & REEL PACKAGING

4 – RoHS COMPATIBLE PRODUCT SPECIFICATIONS

a – PLATING:
– "LF" MEANS THE PRODUCT IS LEAD–FREE, 2µm MINIMUM MATTE TIN OVER 1.27µm MINIMUM NICKEL UNDERPLATE.

b – MANUFACTURING PROCESS COMPATIBILITY
– THE HOUSING WILL WITHSTAND EXPOSURE TO 260°C PEAK TEMPERATURE FOR 30 SECONDS MAX IN A CONVECTION, INFRA–RED OR VAPOR PHASE OR REFLOW OVEN.

c – LEGAL STATEMENT: SEE GS–47–0004

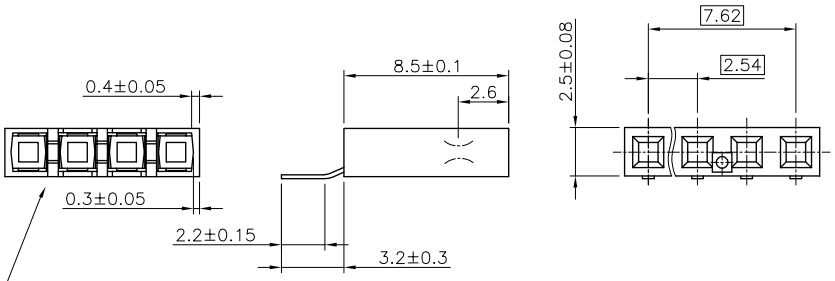

VIEW OF THE HOUSING
WIHTOUT CONTACTS

mat'l. code				surface	tolerance	projection
SEE NOTES				ISO 1302	ISO 406 ISO	101
ltr	ecn no	dr	date	tolerances unless otherwise specified		
A	46491	LMU	14.02.05	angles	X.X ±0.3	mm
B	B–17825	JCO	14.06.03	linear	X.XX ±0.13	
C	B–18611	JCO	14.08.19		X.XXX ±0.05	scale 1:1
				dr	L.MULIN	14.01.22
				engr	J.COMPAGNON	14.01.02
				chr	ASO	14.02.04
				appd	JCO	14.02.05
sheet index	revision sheet					

product family: DUBOX
title: RECEPTACLE SMT HORIZONTAL
dwg no: 10128768 sheet 1 of 1 size A3
type: CUSTOMER Drawing

form: A3

PDS: Rev :C STATUS:Released Printed: Aug 29, 2014

FCIconnect.com
Copyright FCI