Excellent Integrated System Limited

Stocking Distributor

Click to view price, real time Inventory, Delivery & Lifecycle Information:

FCI
10087607-10002LF

For any questions, you can email us directly:
sales@integrated-circuit.com

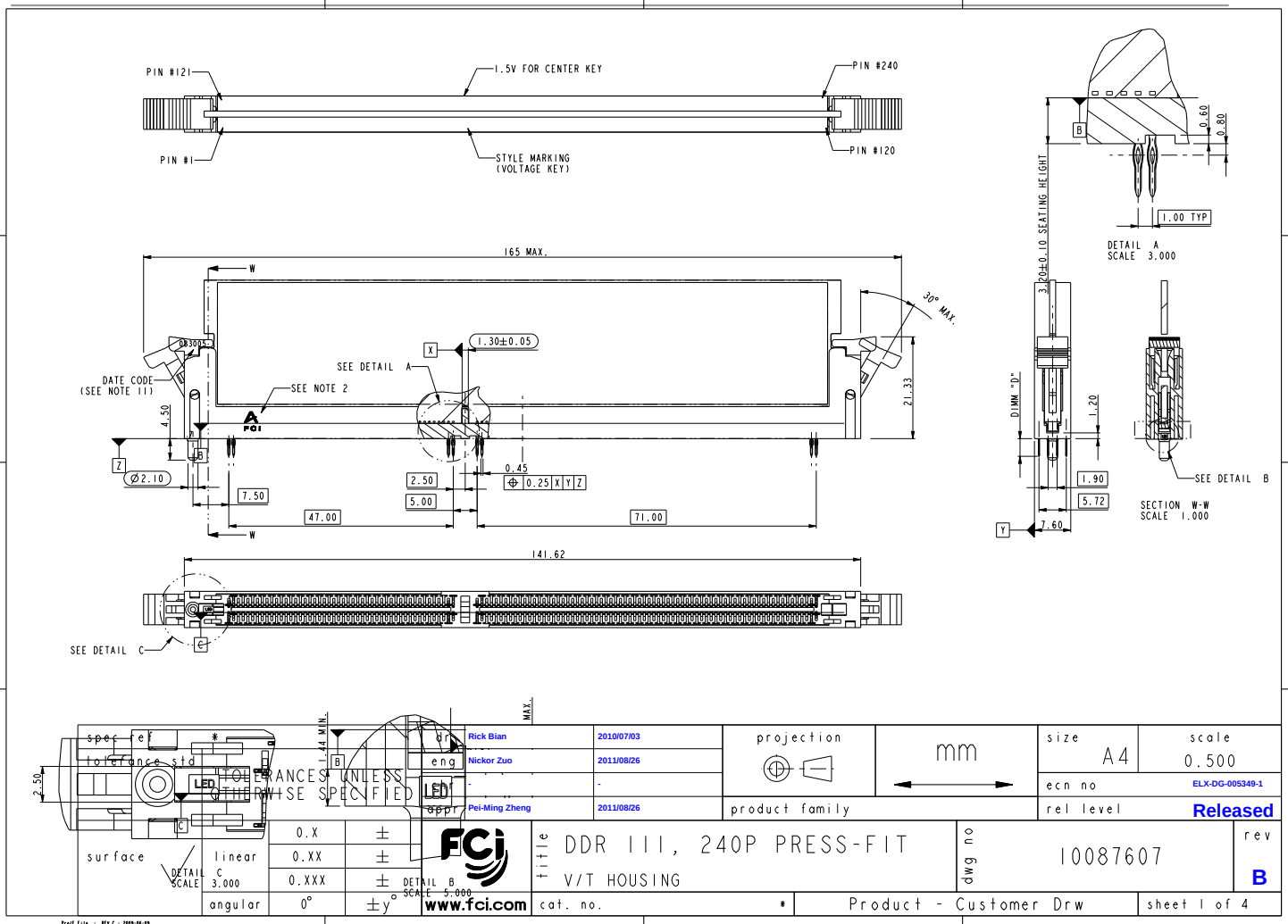

spec ref *	dr	Rick Bian	2010/07/03	projection	mm	size A4 / scale 0.500
tolerance std TOLERANCES UNLESS OTHERWISE SPECIFIED	eng	Nickor Zuo	2011/08/26			ecn no ELX-DG-005349-1
		-				
	appr	Pei-Ming Zheng	2011/08/26	product family		rel level **Released**

surface	linear	0.X	±	title: DDR III, 240P PRESS-FIT V/T HOUSING	dwg no 10087607	rev **B**
		0.XX	±			
		0.XXX	±			
	angular	0°	±y°	www.fci.com	cat. no. *	Product - Customer Drw / sheet 1 of 4

Copyright FCI.

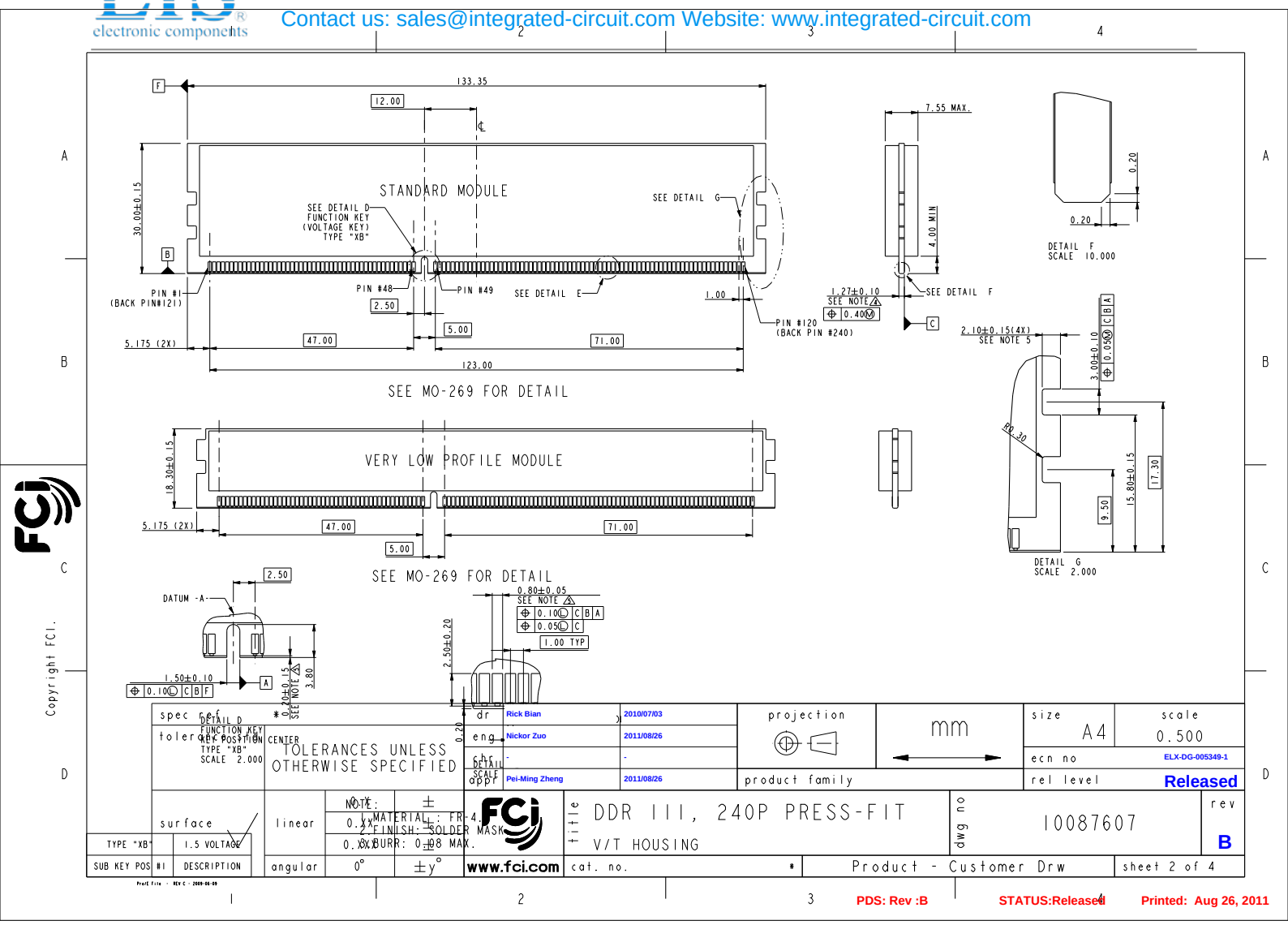
STANDARD MODULE
SEE DETAIL D FUNCTION KEY (VOLTAGE KEY) TYPE "XB"
SEE DETAIL G
SEE DETAIL E
PIN #1 (BACK PIN#121)
PIN #48
PIN #49
PIN #120 (BACK PIN #240)
133.35
12.00
30.00±0.15
5.175 (2X)
47.00
71.00
123.00
2.50
5.00
1.00
SEE MO-269 FOR DETAIL
VERY LOW PROFILE MODULE
18.30±0.15
SEE MO-269 FOR DETAIL
7.55 MAX.
4.00 MIN
1.27±0.10 SEE NOTE
SEE DETAIL F
DETAIL F SCALE 10.000
0.20
2.10±0.15(4X) SEE NOTE 5
3.00±0.10
R0.30
15.80±0.15
17.30
9.50
DETAIL G SCALE 2.000
DATUM -A-
1.50±0.10
0.80±0.05 SEE NOTE
1.00 TYP
2.50±0.20
3.80
0.20±0.15 SEE NOTE
DETAIL D FUNCTION KEY KEY POSITION CENTER TYPE "XB" SCALE 2.000
TOLERANCES UNLESS OTHERWISE SPECIFIED
dr Rick Bian 2010/07/03
eng Nickor Zuo 2011/08/26
chr -
appr Pei-Ming Zheng 2011/08/26
projection
mm
size A4
scale 0.500
ecn no ELX-DG-005349-1
product family
rel level Released
surface
linear
angular
TYPE "XB" 1.5 VOLTAGE
SUB KEY POS #1 DESCRIPTION
NOTE: 1.MATERIAL: FR-4. 2.FINISH: SOLDER MASK 3.BURR: 0.08 MAX.
www.fci.com
title DDR III, 240P PRESS-FIT V/T HOUSING
dwg no 10087607
rev B
cat. no.
Product - Customer Drw
sheet 2 of 4
Copyright FCI.

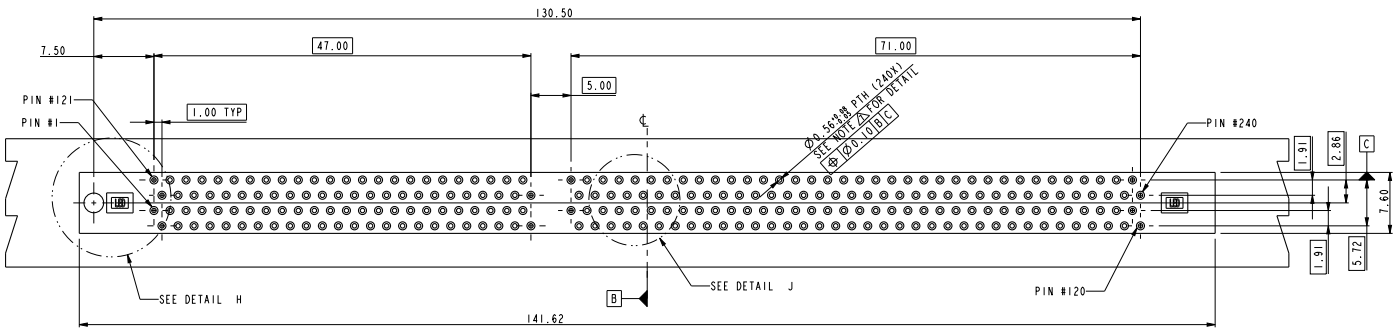

RECOMMENDED CIRCUIT BOARD HOLE LAYOUT

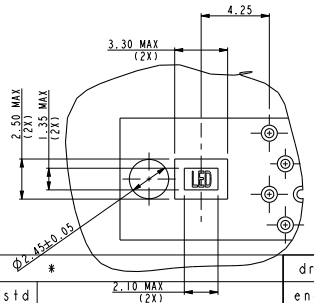

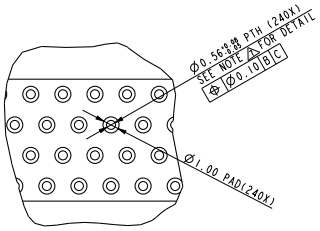

DETAIL J
SCALE 3.000

spec ref	*	dr	Rick Bian	2010/07/03	projection	mm	size A4 / scale 0.500
tolerance std	TOLERANCES UNLESS OTHERWISE SPECIFIED	eng	Nickor Zuo	2011/08/26			ecn no ELX-DG-005349-1
		chr	-	-			
		appr	Pei-Ming Zheng	2011/08/26	product family		rel level Released
surface	linear 0.X ± / 0.XX ± / 0.XXX ± / angular 0° ±y°	www.fci.com	title DDR III, 240P PRESS-FIT V/T HOUSING			dwg no 10087607	rev B
			cat. no. *		Product - Customer Drw		sheet 3 of 4

Copyright FCI.

Distributor of FCI: Excellent Integrated System Limited
Datasheet of 10087607-10002LF - CONN FFC
Contact us: sales@integrated-circuit.com Website: www.integrated-circuit.com

10087607-□ □ □ □ □

STYLE: MECHAMICAL KEYING

1 : 1.5 VOLT. W/CENTER KEY #1

REVISE

0

TAIL LENGTH

CODE	DIM. "D"
0	3.30
1	3.70
2	4.20

PLATING

CODE	CONTACT	TAIL AREA	UNDERPLATE	CODE	CONTACT	TAIL AREA	UNDERPLATE
2B	15u"(0.38um) MIN. GOLD	35u"~100u" Tin/Lead PLATING	50u"(1.27um) MIN. NICKEL OVERALL	2LF	15u"(0.38um) MIN. GOLD	35u"~100u" Tin PLATING	50u"(1.27um) MIN. NICKEL OVERALL
3B	30u"(0.76um) MIN. GOLD			3LF	30u"(0.76um) MIN. GOLD		
4B	3u"(0.076um) MIN. GOLD			4LF	3u"(0.076um) MIN. GOLD		
6B	15u"(0.38um) MIN. GOLD (LUBRICATED)	35u"~100u" Tin/Lead PLATING	50u"(1.27um) MIN. NICKEL OVERALL	6LF	15u"(0.38um) MIN. GOLD (lubricated)	35u"~100i" Tin PLATING	50u"(1.27um) MIN. NICKEL OVERALL
7B	30u"(0.76um) MIN. GOLD (LUBRICATED)			7LF	30u"(0.76um) MIN. GOLD (LUBRICATED)		
8B	3u"(0.076um) MIN. GOLD (LUBRICATED)			8LF	3u"(0.076um) MIN. GOLD (LUBRICATED)		

COLOR OF HOUSING AN EJECTOR

0 : BLACK HOUSING + IVORY EJECTOR
1 : BLACK HOUSING + AMBER COLOR EJECTOR
2 : BLACK HOUSING + BLACK EJECTOR
3 : IVORY HOUSING + IVORY EJECTOR
4 : BLUE HOUSING + IVORY EJECTOR

NOTE:
1. MATERIAL:
   HOUSING: HIGH PERFORMANCE RESINS, GLASS FILLED UL94V-0 RATED,
   COLOR: BLACK.
   EJECTOR: HIGH PERFORMANCE RESINS, GLASS FILLED UL94V-0 RATED,
   COLOR: NATURAL.
   TERMINAL: COPPER ALLOY.
2. FCI LOGO TO BE APPROXIMATELY LOCATED AS SHOWN ON PRINT.
3. PRODUCT SPECIFICATION: GS-12-XXX(SPECIFICATION NOT YET AVAILABLE)
4. CARD THICKNESS APPLIES ACROSS TABS AND INCLUDES PLATING AND / OR METALIZATION.
5. LEADING EDGE OF CONTACT PADS SPECIFIED BY THE KEEP OUT ZONE SHALL BE FREE OF BURRS AND EXTERNAL TIE BARS. FOR OPTIMUM PERFORMANCE, THE TIE BAR IS TO BE ON AN INTERNAL LAYER SO THAT THE REMNANT CANNOT CAUSE CONTACT DAMAGE.
6. PACKAGING SPECIFICATION: GS-14-528.
7. ALL PTH SHOULD BE 0.66mm DIA DRILLED AND 0.025mm MIN. ELECTRO-DEPOSITED COPPER THK ON THROUGH HOLE WALL.
8. THIS PRODUCT MEETS EUROPEAN UNION DIRECTIVES AND OTHE COUNTRY REGULATIONS AS DESCRIBED IN GS-22-008.
9. THE HOUSING WILL WITHSTAND EXPOSURE TO 260°C PEAK TEM FOR 10 SECONDS IN A WAVE SOLDER APPLICATION.
10. THE AMBER EJECTOR CAN WITHSTAND MAX 174°C EXPOSURE TE
11. DATE CODE: X X X X X X

dr	Rick Bian	2010/07/03	
eng	Nickor Zuo	2011/08/26	
chr	-	-	
appr	Pei-Ming Zheng	2011/08/26	

projection | mm | size A4 | scale 0.500
ecn no ELX-DG-005349-1
product family | rel level Released

surface | linear | angular | YEAR 0.X ± | DATE 0.XX ± | MONTH 0.XXX ± | 0° ±y°

FCI www.fci.com

title: DDR III, 240P PRESS-FIT V/T HOUSING
dwg no 10087607
rev B
cat. no. *
Product - Customer Drw
sheet 4 of 4

Copyright FCI.