Excellent Integrated System Limited

Stocking Distributor

Click to view price, real time Inventory, Delivery & Lifecycle Information:

FCI
SFW12R-1STE5LF

For any questions, you can email us directly:
sales@integrated-circuit.com

List of "SFW__R-1/2STE5LF" customer document

DOCUMENT NO.	LIST
10100522(SHEET1)	DOCUMENT LIST
10100522(SHEET2)	CAT.NO.TABLE FOR 1mm SPACING SMT CONNECTOR (SFW__R-1/2ST__LF)
10100522(SHEET3)	1mm SPACING SMT CONNECTOR (SFW__R-1ST_LF)
10100522(SHEET4)	1mm SPACING SMT CONNECTOR (SFW__R-2ST_LF)
10100522(SHEET5)	CAT.NO.TABLE FOR PLASTIC TAPE PACKAGED 1mm SPACING SMT CONNECTOR (SFW__R-1/2STE5LF)
10100522(SHEET6)	PLASTIC TAPE PACKAGED 1mm SPACING SMT CONNECTOR (SFW__R-1STE5LF)
10100522(SHEET7)	PLASTIC TAPE PACKAGED 1mm SPACING SMT CONNECTOR (SFW__R-2STE5LF)
10100522(SHEET8)	RECOMMENDED CABLE (FPC) (SFW__R-1/2ST_)
10100522(SHEET9)	RECOMMENDED CABLE (FFC) (SFW__R-1/2ST_)
SC-SFW10	PRODUCT SPECIFICATION
GS-20-129	HANDLING PROCEDURES

FCIconnect.com
Copyright FCI.

mat'l. code	surface ISO 1302	tolerance ISO 406 ISO 1101	projection	product family 58RF	CODE JP
–	58	tolerances unless otherwise specified			

ltr	ecn no	dr	date
A	S09-0120	DGOH	09-04-17
B	J09-0356	M.Y	2009-10-2
C	J09-0380	M.Y	2009-10-27

angles | linear | mm | scale X

title: 1mm SPACING SMT CONNECTOR DOCUMENT LIST (Cat. No. : SFW__R-1/2STE5LF)

dr	M.YAMASHITA	2009-10-27
engr	M.YAMASHITA	2009-10-27
chr	S. [illegible]	2009-10-27
appd	S. [illegible]	2009-10-27

dwg no 10100522 | sheet 1 of 9 | size A4

type Product Customer Drawing

sheet index	revision	C	C	C	C	C	C	C	C	C										Rev. C
	sheet	1	2	3	4	5	6	7	8	9										

CAT. NO. & DIMENSIONS

NO. OF CONTACTS (n)	CAT. NO.	DIMENSIONS (NOTE2) A ± 0.2	B ± 0.2	C ± 0.2	D ± 0.1
4	SFW4R-1/2ST__LF	9.8	8.6	3.0	5.3
5	SFW5R-1/2ST__LF	10.8	9.6	4.0	6.3
6	SFW6R-1/2ST__LF	11.8	10.6	5.0	7.3
7	SFW7R-1/2ST__LF	12.8	11.6	6.0	8.3
8	SFW8R-1/2ST__LF	13.8	12.6	7.0	9.3
9	SFW9R-1/2ST__LF	14.8	13.6	8.0	10.3
10	SFW10R-1/2ST__LF	15.8	14.6	9.0	11.3
11	SFW11R-1/2ST__LF	16.8	15.6	10.0	12.3
12	SFW12R-1/2ST__LF	17.8	16.6	11.0	13.3
13	SFW13R-1/2ST__LF	18.8	17.6	12.0	14.3
14	SFW14R-1/2ST__LF	19.8	18.6	13.0	15.3
15	SFW15R-1/2ST__LF	20.8	19.6	14.0	16.3
16	SFW16R-1/2ST__LF	21.8	20.6	15.0	17.3
17	SFW17R-1/2ST__LF	22.8	21.6	16.0	18.3
18	SFW18R-1/2ST__LF	23.8	22.6	17.0	19.3
19	SFW19R-1/2ST__LF	24.8	23.6	18.0	20.3
20	SFW20R-1/2ST__LF	25.8	24.6	19.0	21.3
21	SFW21R-1/2ST__LF	26.8	25.6	20.0	22.3
22	SFW22R-1/2ST__LF	27.8	26.6	21.0	23.3
23	SFW23R-1/2ST__LF	28.8	27.6	22.0	24.3
24	SFW24R-1/2ST__LF	29.8	28.6	23.0	25.3
25	SFW25R-1/2ST__LF	30.8	29.6	24.0	26.3
26	SFW26R-1/2ST__LF	31.8	30.6	25.0	27.3
27	SFW27R-1/2ST__LF	32.8	31.6	26.0	28.3
28	SFW28R-1/2ST__LF	33.8	32.6	27.0	29.3
29	SFW29R-1/2ST__LF	34.8	33.6	28.0	30.3
30	SFW30R-1/2ST__LF	35.8	34.6	29.0	31.3

CAT. NO. SFW (n) R – 1 ST __ LF

- SERIES NAME
- NO. OF CONTACTS
- RIGHT ANGLE TYPE
- FOR FPC/FFC, CONTACT DIRECTION
  1. LOWER CONTACT TYPE
  2. UPPER CONTACT TYPE
- FOR AUTOMATIC MOUNTING (SMT)
- PACKAGE STYLE
- LEAD FREE

NOTES

1. THIS PRODUCT IS THE CONNECTOR USED FOR FPC/FFC AND COPES WITH AUTOMATIC MOUNTING (SMT).
2. SEE PART DRAWINGS FOR DIMENSIONS A~D.

mat'l. code –	surface 58 ISO 1302	tolerance ISO 406 ISO 1101	projection	product family 58RF	CODE JP
ltr / ecn no / dr / date	tolerances unless otherwise specified			title CAT. NO. TABLE FOR 1mm SPACING SMT CONNECTOR (Cat. No. SFW__R-1/2ST__LF)	
C	angles	linear	mm		
			scale X		
	dr	M.YAMASHITA 2009-10-27	FCI	dwg no 10100522	sheet 2 of 9 / size A4
	engr	M.YAMASHITA 2009-10-27			
	chr	S. Watanabe 2009-10-27			
	appd	S. Oudaman 2009-10-27		type Product Customer Drawing	
sheet index	revision / sheet				Rev. C

FCIconnect.com
Copyright FCI.

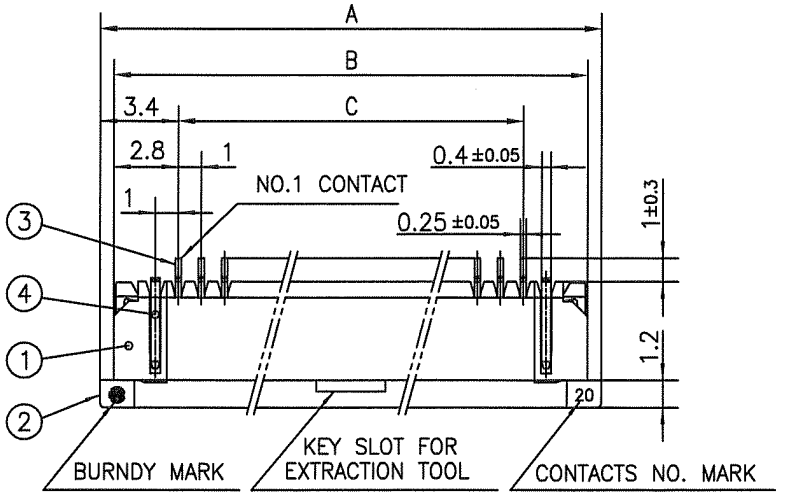

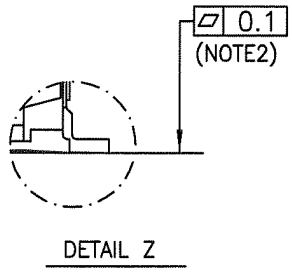

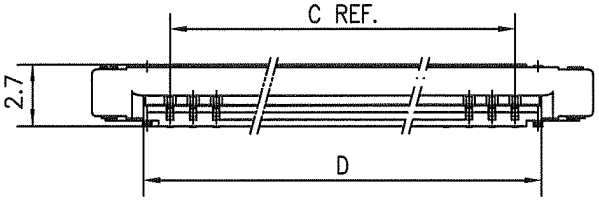

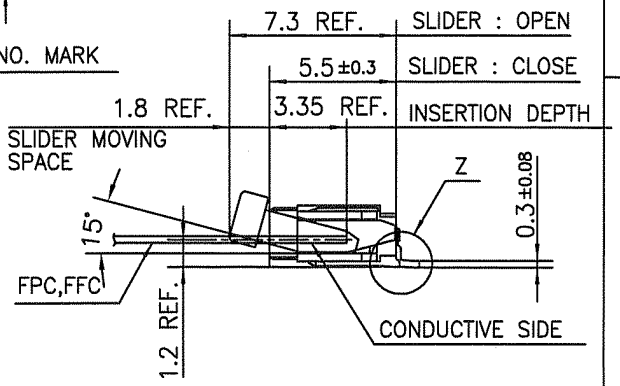

PT. NO.	PARTS NAME	MATERIAL	Q'TY	NOTE
1	HOUSING	PPS RESIN GLASS REINFORCED (UL94V-0)	1	COLOR : BROWN
2	SLIDER		1	COLOR : BLACK
3	CONTACT	PHOSPHOR BRONZE	n	PLATING : TIN
4	MOUNTING PLATE		2	

n : NO. OF CONTACTS

RECOMMENDED PC BOARD LAYOUT
(COMPONENT SIDE)

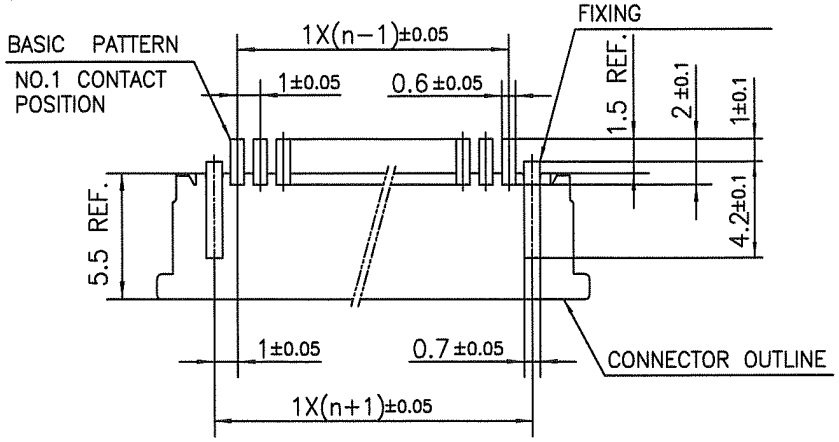

NOTES

1. THIS PRODUCT IS THE CONNECTOR USED FOR FPC/FFC AND COPES WITH AUTOMATIC MOUNTING (SMT).
2. FLATNESS FOR CONTACT TERMINAL HOUSING MUST BE WITHIN TOLERANCE IN Z PORTION DETAILED DRAWING.
3. THIS PRODUCT IS LOWER CONTACT TYPE CONNECTOR.
4. THIS PRODUCT MEETS EUROPEAN UNION DIRECTIVES AND OTHER?COUNTRY REGULATIONS AS DESCRIBED IN GS-22-008
5. THE HOUSING WILL WITHSTAND EXPOSURE TO 260°C PEAK TEMPERATURE FOR 10 SECONDS IN A REFLOW SOLDERING OVEN.

mat'l. code		surface 58 ISO 1302	tolerance ISO 406 ISO 1101	projection	product family 58RF	CODE JP
ltr	ecn no	dr	date	tolerances unless otherwise specified		title
C				angles linear ±0.2	mm	1mm SPACING SMT CONNECTOR (Cat. No. SFW__R-1ST__LF)
					scale X	
				dr M.YAMASHITA 2009-10-27	FCI	dwg no 10100522 sheet 3 of 9 size A4
				engr M.YAMASHITA 2009-10-27		
				chr S. Witula 2009-10-27		
				appd S. Oladana 2009-10-27		type Product Customer Drawing
sheet index	revision					Rev. C
	sheet					

FCIconnect.com
Copyright FCI.

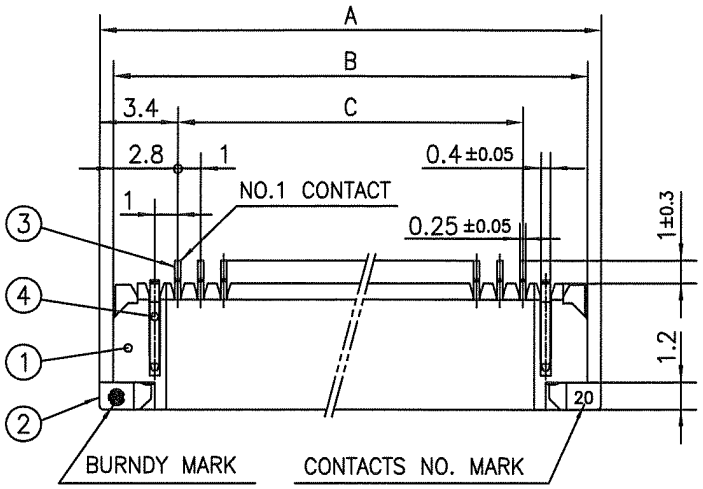

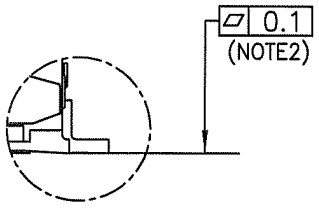

DETAIL Z

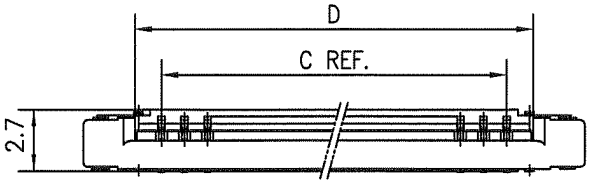

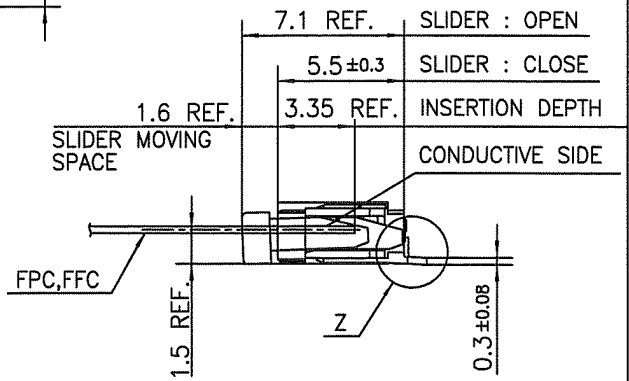

PT. NO.	PARTS NAME	MATERIAL	Q'TY	NOTE
1	HOUSING	PPS RESIN GLASS REINFORCED (UL94V-0)	1	COLOR : BROWN
2	SLIDER		1	COLOR : BLACK
3	CONTACT	PHOSPHOR BRONZE	n	PLATING : TIN
4	MOUNTING PLATE		2	

n : NO. OF CONTACTS

RECOMMENDED PC BOARD LAYOUT
(COMPONENT SIDE)

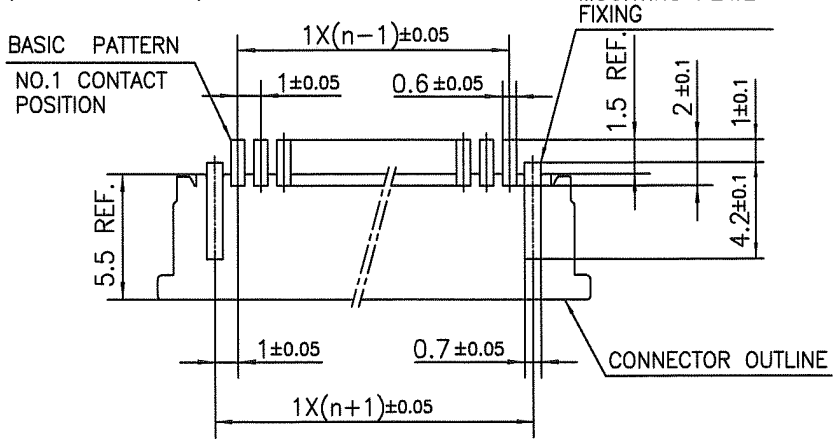

NOTES

1. THIS PRODUCT IS THE CONNECTOR USED FOR FPC/FFC AND COPES WITH AUTOMATIC MOUNTING (SMT).
2. FLATNESS FOR CONTACT TERMINAL HOUSING MUST BE WITHIN TOLERANCE IN Z PORTION DETAILED DRAWING.
3. THIS PRODUCT IS UPPER CONTACT TYPE CONNECTOR.
4. THIS PRODUCT MEETS EUROPEAN UNION DIRECTIVES AND OTHER?COUNTRY REGULATIONS AS DESCRIBED IN GS-22-008
5. THE HOUSING WILL WITHSTAND EXPOSURE TO 260°C PEAK TEMPERATURE FOR 10 SECONDS IN A REFLOW SOLDERING OVEN.

mat'l. code				surface 58 ISO 1302	tolerance ISO 406 ISO 1101	projection	product family 58RF	CODE JP
ltr	ecn no	dr	date	tolerances unless otherwise specified			title
C				angles	linear ±0.2	mm	1mm SPACING SMT CONNECTOR (Cat. No. SFW__R-2ST__LF)
						scale X	
				dr	M.YAMASHITA 2009-10-27	FCI	dwg no 10100522 sheet 4 of 9 size A4
				engr	M.YAMASHITA 2009-10-27		
				chr	2009-10-27		
				appd	2009-10-27		type Product Customer Drawing
sheet index	revision sheet						Rev. C

FCIconnect.com
Copyright FCI.

CAT. NO. & DIMENSIONS

NO. OF CONTACTS (n)	CAT. NO. (NOTE2)	DIMENSIONS (NOTE3)		
		E MAX.	F ± 0.3	G ± 0.1
4	SFW4R-1/2STE5LF	22.4	16	—
5	SFW5R-1/2STE5LF	30.4	24	—
6	SFW6R-1/2STE5LF	30.4	24	—
7	SFW7R-1/2STE5LF	30.4	24	—
8	SFW8R-1/2STE5LF	30.4	24	—
9	SFW9R-1/2STE5LF	30.4	24	—
10	SFW10R-1/2STE5LF	30.4	24	—
11	SFW11R-1/2STE5LF	30.4	24	—
12	SFW12R-1/2STE5LF	30.4	24	—
13	SFW13R-1/2STE5LF	38.4	32	28.4
14	SFW14R-1/2STE5LF	38.4	32	28.4
15	SFW15R-1/2STE5LF	38.4	32	28.4
16	SFW16R-1/2STE5LF	38.4	32	28.4
17	SFW17R-1/2STE5LF	50.4	44	40.4
18	SFW18R-1/2STE5LF	50.4	44	40.4
19	SFW19R-1/2STE5LF	50.4	44	40.4
20	SFW20R-1/2STE5LF	50.4	44	40.4
21	SFW21R-1/2STE5LF	50.4	44	40.4
22	SFW22R-1/2STE5LF	50.4	44	40.4
23	SFW23R-1/2STE5LF	50.4	44	40.4
24	SFW24R-1/2STE5LF	50.4	44	40.4
25	SFW25R-1/2STE5LF	50.4	44	40.4
26	SFW26R-1/2STE5LF	50.4	44	40.4
27	SFW27R-1/2STE5LF	50.4	44	40.4
28	SFW28R-1/2STE5LF	62.4	56	52.4
29	SFW29R-1/2STE5LF	62.4	56	52.4
30	SFW30R-1/2STE5LF	62.4	56	52.4

CAT. NO. SFW (n) R - 1 ST E5 LF

- SFW — SERIES NAME
- (n) — NO. OF CONTACTS
- R — RIGHT ANGLE TYPE
- 1 — FOR FPC/FFC, WITH CABLE LOCK MECHANISM
- ST — CONTACT DIRECTION
  1. LOWER CONTACT TYPE
  2. UPPER CONTACT TYPE
- E5 — FOR AUTOMATIC MOUNTING (SMT)
- LF — TAPE PACKAGING
- LEAD FREE

NOTES

1. THIS PRODUCT IS THE CONNECTOR USED FOR FPC/FFC AND COPES WITH AUTOMATIC MOUNTING (SMT).
2. THIS CATALOG NO. INDICATES PLASTIC TAPE PACKAGED CONNECTOR.
3. SEE PART DRAWINGS FOR DIMENSIONS E~G.

FCIconnect.com
Copyright FCI.

mat'l. code –				surface 58 ISO 1302	tolerance ISO 406 ISO 1101	projection	product family 58RF	CODE JP
ltr	ecn no	dr	date	tolerances unless otherwise specified			title CAT NO. TABLE FOR PLASTIC TAPE PACKAGED 1mm SPACING SMT CONNECTOR (Cat. No. SFW__R-1/2STE5LF)
C				angles	linear	mm	
						scale X	
				dr	M.YAMASHITA 2009-10-27	FCI	dwg no 10100522 sheet 5 of 9	size A4
				engr	M.YAMASHITA 2009-10-27		
				chr	S. Wetzler 2009-10-27		
				appd	S. Chadani 2009-10-27		type Product Customer Drawing
sheet index	revision						Rev. C
	sheet						

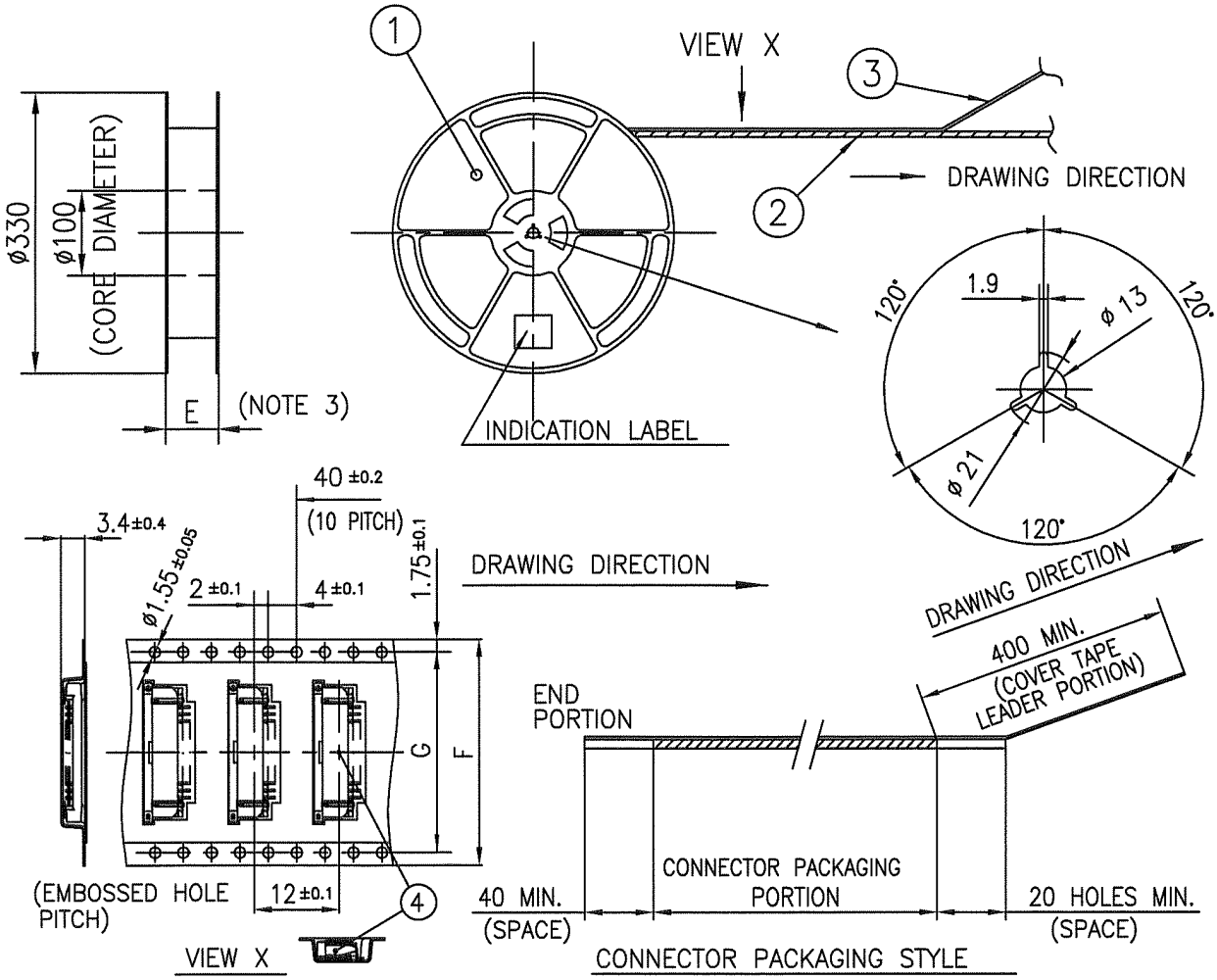

PT. NO.	PARTS NAME	CAT. NO.	MATERIAL	Q'TY	NOTE
1	REEL	———	POLYSTYRENE	1	COLOR : WHITE or BLACK
2	PLASTIC (EMBOSS) TAPE	———	PET	——	COLOR : TRANSPARENCY
3	COVER	———	POLYESTER	——	COLOR : TRANSPARENCY
4	CONNECTOR	SFW__R-1ST__LF	SEE ATTACHED DWG.	1500	LOWER CONTACT TYPE

NOTES

1. THIS IS PLASTIC TAPE PACKAGED CONNECTOR USED FOR FPC/FFC AND COPES WITH AUTOMATIC MOUNTING (SMT).
2. SEE JIS C 0806 (PACKING OF ELECTRONIC COMPONENTS ON CONTINUOUS TAPES (SURFACE MOUNTING DEVICES)) FOR SHAPE AND DIMENSIONS OF PLASTIC (EMBOSS) TAPE AND REEL.
3. E DIMENSION IS PORTION OF THE CORE.

mat'l. code				surface ISO 1302 ✓	tolerance ISO 406 ISO 1101	projection	product family 58RF	CODE JP
ltr	ecn no	dr	date	tolerances unless otherwise specified			title PLASTIC TAPE PACKAGED 1mm SPACING SMT CONNECTOR (Cat. No. SFW__R-1STE5LF)
C				angles ±5°	linear ±5	mm	
						scale X	
				dr	M.YAMASHITA 2009-10-27	FCI	dwg no 10100522 sheet 6 of 9 size A4
				engr	M.YAMASHITA 2009-10-27		
				chr	S. Wittke 2009-10-27		
				appd	S. Chudamani 2009-10-27		type Product Customer Drawing
sheet index	revision						Rev. C
	sheet						

Copyright FCI.
FCIconnect.com

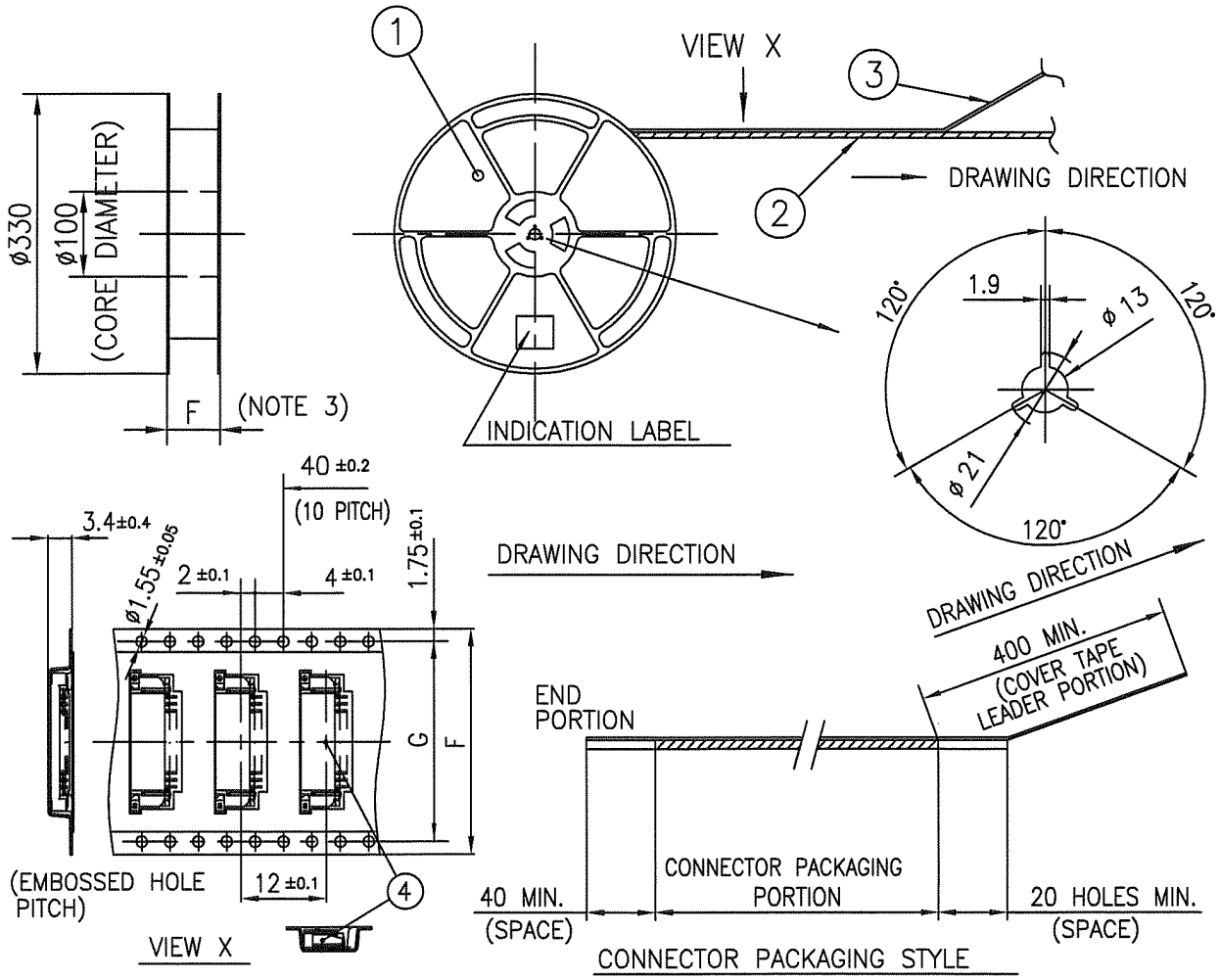

PT. NO.	PARTS NAME	CAT. NO.	MATERIAL	Q'TY	NOTE
1	REEL	———	POLYSTYRENE	1	COLOR : WHITE or BLACK
2	PLASTIC (EMBOSS) TAPE	———	PET	——	COLOR : TRANSPARENCY
3	COVER	———	POLYESTER	——	COLOR : TRANSPARENCY
4	CONNECTOR	SFW__R-2ST__LF	SEE ATTACHED DWG.	1500	UPPER CONTACT TYPE

NOTES

1. THIS IS PLASTIC TAPE PACKAGED CONNECTOR USED FOR FPC/FFC AND COPES WITH AUTOMATIC MOUNTING (SMT).
2. SEE JIS C 0806 (PACKING OF ELECTRONIC COMPONENTS ON CONTINUOUS TAPES (SURFACE MOUNTING DEVICES)) FOR SHAPE AND DIMENSIONS OF PLASTIC (EMBOSS) TAPE AND REEL.
3. E DIMENSION IS PORTION OF THE CORE.

FCIconnect.com
Copyright FCI.

mat'l. code				surface ISO 1302	tolerance ISO 406 ISO 1101	projection	product family 58RF	CODE JP
ltr	ecn no	dr	date	tolerances unless otherwise specified			title PLASTIC TAPE PACKAGED 1mm SPACING SMT CONNECTOR (Cat. No. SFW__R-2STE5LF)
C				angles ±5°	linear ±5	mm	
						scale ℵ	
				dr	M.YAMASHITA	2009-10-27	dwg no 10100522	sheet 7 of 9	size A4
				engr	M.YAMASHITA	2009-10-27	
				chr	S. Nishi	2009-10-27	
				appd	S. Okudaira	2009-10-27	type Product Customer Drawing

sheet index	revision sheet	Rev. C

RECOMMENDED CABLE (FPC)

n : NO. OF CONDUCTOR

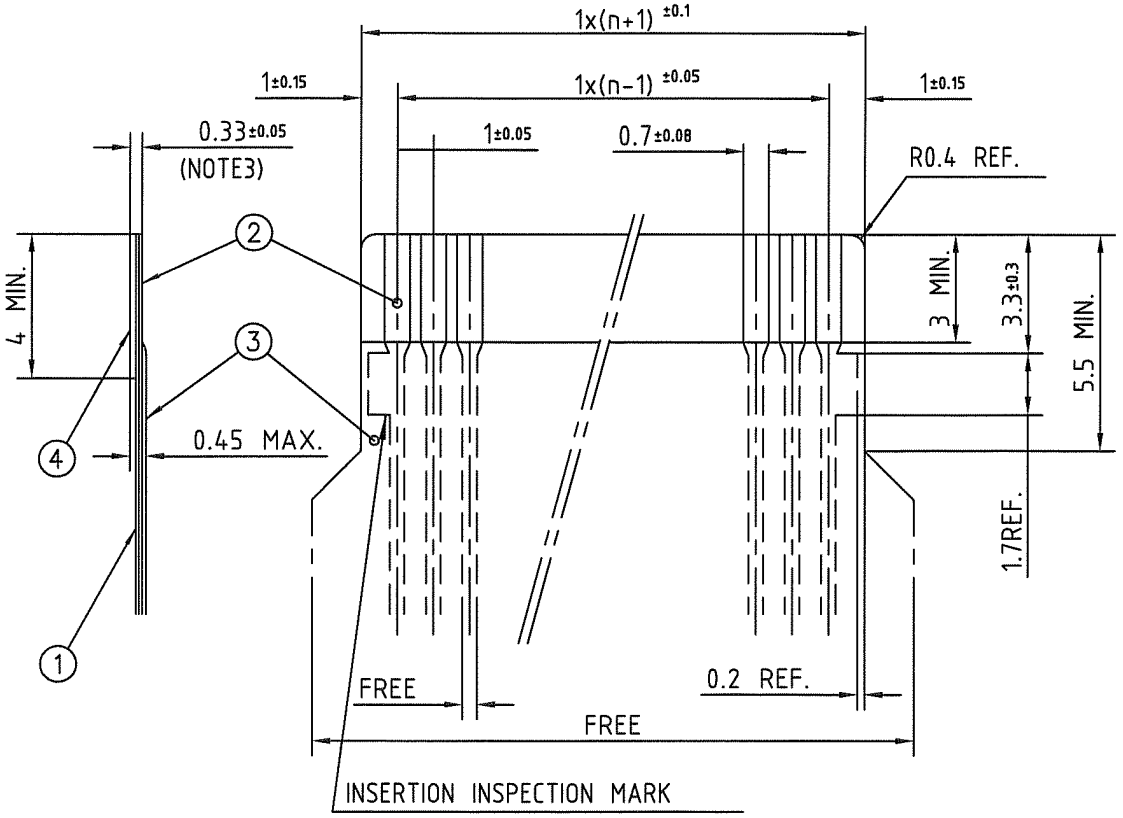

PT. NO.	PARTS NAME	MATERIAL	THICKNESS (um)
1	BASE FILM	POLYIMIDE OR POLYESTER OR EQUAL	25
2	CONDUCTOR	COPPER FOIL(PLATING:SOLDER 1um MIN.)	35
3	OVERLAY	POLYIMIDE OR POLYESTER OR EQUAL	—
4	SUPPORTING TAPE	POLYESTER OR POLYIMIDE OR EQUAL	188

NOTES

1. NO BURR AT EACH PORTION.
2. NO PEELING IN COMMON USE.
3. TOTAL THICKNESS LIMIT OF EACH MATERIAL (INCLUDING ADHESIVE AGENT) IS SPECIFIED.

FCIconnect.com
Copyright FCI.

mat'l. code		surface 58 ISO 1302	tolerance ISO 406 ISO 1101	projection	product family 58RF	CODE JP
ltr	ecn no	dr	date	tolerances unless otherwise specified	title RECOMMENDED CABLE (Cat. No. SFW__R-1/2___)	
C				angles linear	mm	
					scale X	
				dr M.YAMASHITA 2009-10-27	dwg no 10100522	sheet 8 of 9 size A4
				engr M.YAMASHITA 2009-10-27		
				chr S. [illegible] 2009-10-27		
				appd S. [illegible] 2009-10-27	type Product Customer Drawing	
sheet index	revision					Rev. C
	sheet					

RECOMMENDED CABLE (FFC)

n : NO. OF CONDUCTOR

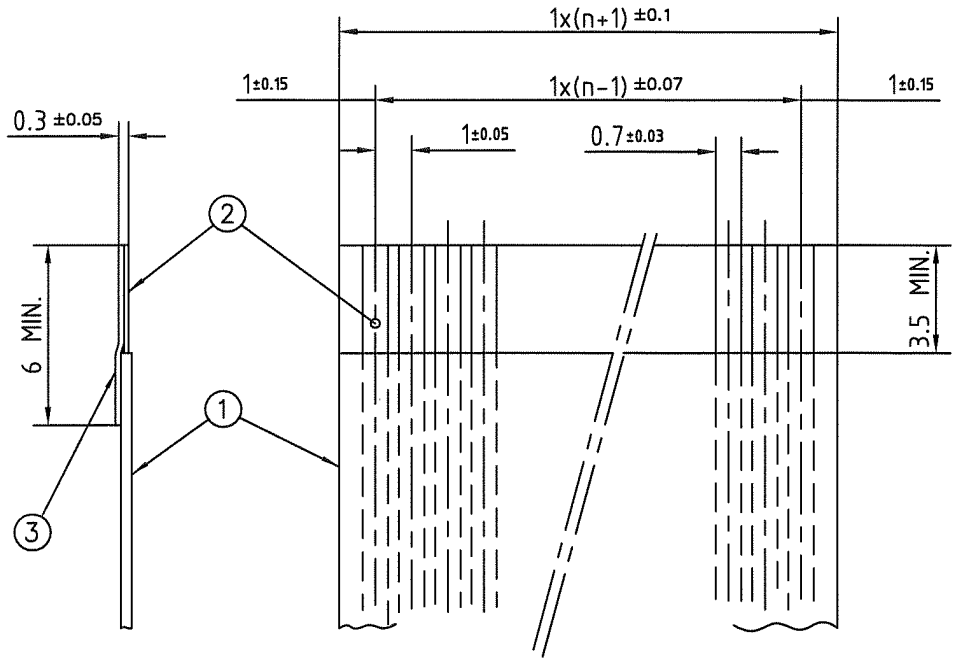

PT. NO.	PARTS NAME	MATERIAL	NOTE
1	INSULATOR	FLAME RESISTING POLYESTER OR EQUAL	———
2	CONDUCTOR	COPPER FOIL	PLATING:TIN OR SOLDER 1um MIN.
3	SUPPORTING TAPE	FLAME RESISTING POLYESTER OR EQUAL	———

NOTES

1. NO BURR AT EACH PORTION.
2. NO PEELING IN COMMON USE.

mat'l. code		surface 58 ISO 1302	tolerance ISO 406 ISO 1101	projection	product family 58RF	CODE JP
ltr	ecn no	dr	date	tolerances unless otherwise specified		title RECOMMENDED CABLE (Cat. No. SFW__R-1/2___)
C				angles linear	mm	
					scale X	
				dr M.YAMASHITA 2009-10-27	FCI	dwg no 10100522 sheet 9 of 9 size A4
				engr M.YAMASHITA 2009-10-27		
				chr S. Wetzel 2009-10-27		
				appd S. Chatanin 2009-10-27		type Product Customer Drawing
sheet index	revision sheet					Rev. C

FCIconnect.com
Copyright FCI.