Excellent Integrated System Limited

Stocking Distributor

Click to view price, real time Inventory, Delivery & Lifecycle Information:

STMicroelectronics
BULB49DT4

For any questions, you can email us directly:
sales@integrated-circuit.com

Distributor of STMicroelectronics: Excellent Integrated System Limited
Datasheet of BULB49DT4 - TRANSISTOR HIGH VOLTAGE
Contact us: sales@integrated-circuit.com Website: www.integrated-circuit.com

BUL49D
BULB49D

High voltage fast-switching NPN power transistors

Features

- High voltage capability
- Low spread of dynamic parameters
- Minimum lot-to-lot spread for reliable operation
- Very high switching speed
- High ruggedness

Applications

- Electronic transformers for halogen lamps
- Flyback and forward single transistor low power converters

Description

The devices are manufactured using high voltage multi-epitaxial planar technology for high switching speeds and high voltage capability. The devices are designed for use in electronic transformer for halogen lamps.

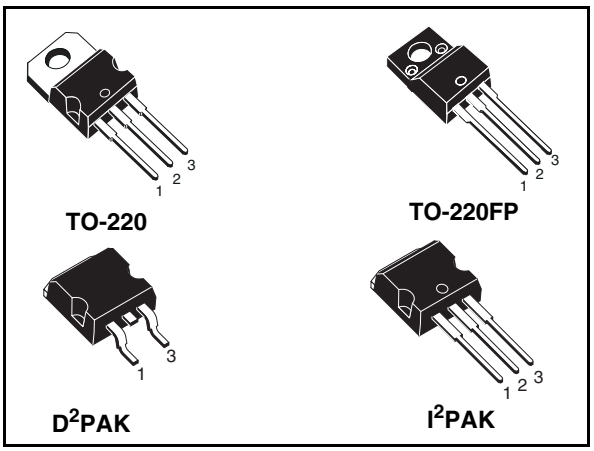

Figure 1. Internal schematic diagram

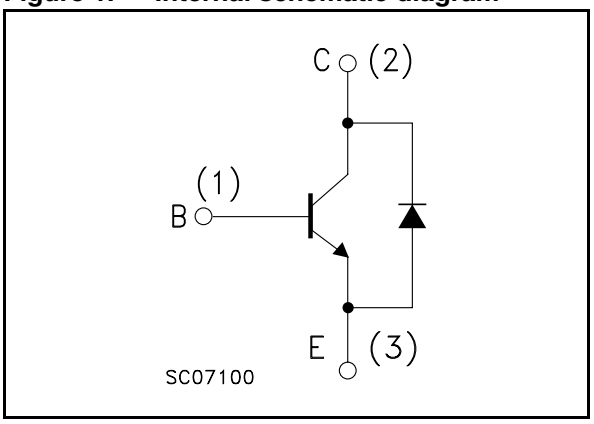

Table 1. Device summary

Order code	Marking	Package	Packaging
BUL49D	BUL49D	TO-220	Tube
BUL49DFP	BUL49DFP	TO-220FP	Tube
BULB49D-1	BULB49D	I^2PAK	Tube
BULB49DT4	BULB49D	D^2PAK	Tape and reel

Distributor of STMicroelectronics: Excellent Integrated System Limited
Datasheet of BULB49DT4 - TRANSISTOR HIGH VOLTAGE
Contact us: sales@integrated-circuit.com Website: www.integrated-circuit.com

Contents

1 Electrical ratings 3

2 Electrical characteristics 4

2.1 Electrical characteristics (curves) 5

2.2 Test circuits 7

3 Package mechanical data 8

4 Packaging information 13

5 Revision history 14

Distributor of STMicroelectronics: Excellent Integrated System Limited
Datasheet of BULB49DT4 - TRANSISTOR HIGH VOLTAGE
Contact us: sales@integrated-circuit.com Website: www.integrated-circuit.com

1 Electrical ratings

Table 2. Absolute maximum ratings

Symbol	Parameter	Value		Unit
		D^2PAK I^2PAK TO-220	TO-220FP	
V_{CES}	Collector-emitter voltage (V_{BE} =0)	850		V
V_{CEO}	Collector-emitter voltage (I_B =0)	450		V
V_{EBO}	Emitter-base voltage (I_C =0, I_B <2 A, t_P < 10 ms)	$V_{(BR)EBO}$		V
I_C	Collector current	5		A
I_{CM}	Collector peak current (t_P < 5ms)	10		A
I_B	Base current	2		A
I_{BM}	Base peak current (t_P < 5 ms)	4		A
P_{tot}	Total dissipation at $T_c \leq 25°C$	80	34	W
T_{stg}	Storage temperature	-65 to 150		°C
T_J	Max. operating junction temperature	150		°C

Table 3. Thermal data

Symbol	Parameter		D^2PAK I^2PAK TO-220	TO-220FP	Unit
$R_{thj-case}$	Thermal resistance junction-case	max	1.56	3.67	°C/W
$R_{thj-amb}$	Thermal resistance junction-ambient	max	62.5	62.5	°C/W

Distributor of STMicroelectronics: Excellent Integrated System Limited
Datasheet of BULB49DT4 - TRANSISTOR HIGH VOLTAGE
Contact us: sales@integrated-circuit.com Website: www.integrated-circuit.com

2 Electrical characteristics

(T_{case} = 25°C unless otherwise specified)

Table 4. Electrical characteristics

Symbol	Parameter	Test conditions	Min.	Typ.	Max.	Unit
I_{CES}	Collector cut-off current (V_{BE} =0)	V_{CE} = 850 V V_{CE} = 850 V T_c = 125 °C			100 500	µA µA
I_{EBO}	Emitter cut-off current (I_C =0)	V_{EB} = 9 V			100	µA
$V_{(BR)EBO}$	Emitter-base brakdown voltage (I_C = 0)	I_E =10 mA	10		18	V
$V_{CEO(sus)}$ (1)	Collector-emitter sustaining voltage (I_B = 0)	I_C =10 mA	450			V
$V_{CE(sat)}$ (1)	Collector-emitter saturation voltage	I_C =1 A I_B =0.2 A I_C =2 A I_B =0.4 A I_C =4 A I_B =0.8 A		0.1	0.3 0.6 1.2	V V V
$V_{BE(sat)}$ (1)	Base-emitter saturation voltage	I_C =1 A I_B =0.2 A I_C =4 A I_B =0.8 A			1 1.3	V V
h_{FE} (1)	DC current gain	I_C =10 mA V_{CE} =5 V I_C =500 mA V_{CE} =5 V I_C =7 A V_{CE} =10 V	10 4		 60 10	
V_{CEW} (1)	Maximum collector-emitter voltage without snubber	I_C =8 A V_{BB}= -2.5 V L =50 µH R_{BB} =0 t_p =10 µs	450			V
t_s t_f	Resistive load Storage time Fall time	V_{CC} =250 V I_C =2 A I_{B1}=-I_{B2} =400 mA (see *Figure 12*)	2		3 0.8	µs µs
t_s t_f	Inductive load Storage time Fall time	V_{CL} =300 V I_C =4 A $I_{B(on)}$ =800 mA $R_{BB(off)}$ =0 $V_{BE(off)}$ =-5 V L =1 mH (see *Figure 13*)		0.6 50	1.3 100	µs ns
V_F	Diode forward voltage	I_C = 3 A			1.5	V

1. Pulsed duration = 300 ms, duty cycle ≤1.5%

Distributor of STMicroelectronics: Excellent Integrated System Limited
Datasheet of BULB49DT4 - TRANSISTOR HIGH VOLTAGE
Contact us: sales@integrated-circuit.com Website: www.integrated-circuit.com

2.1 Electrical characteristics (curves)

Figure 2. Safe operating area (for TO-220 - D²PAK - I²PAK)

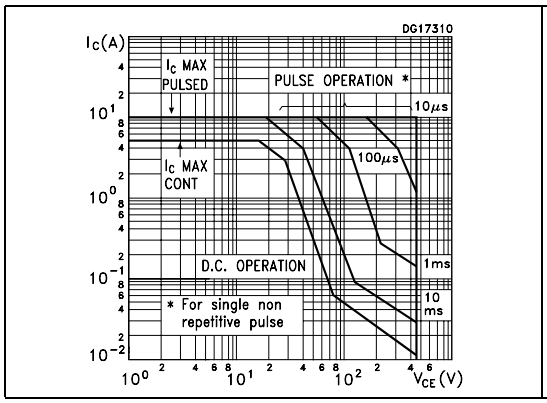

Figure 3. Safe operating area (for TO-220FP)

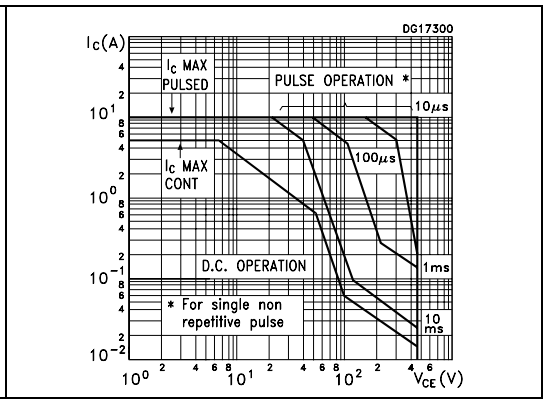

Figure 4. Derating curves

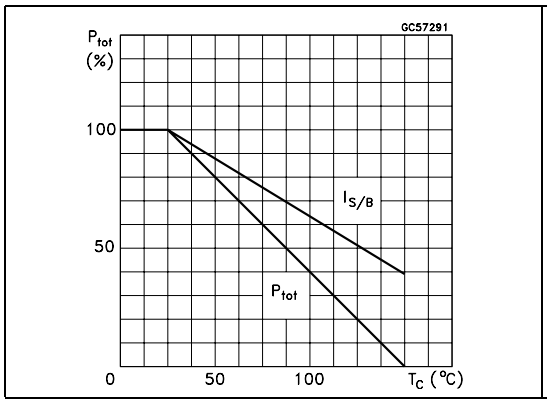

Figure 5. Output characteristics

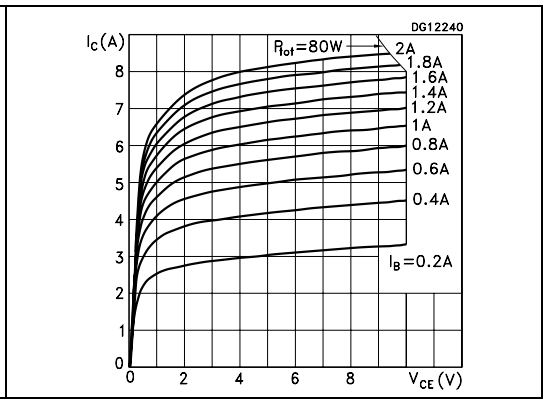

Figure 6. Collector-emitter saturation voltage

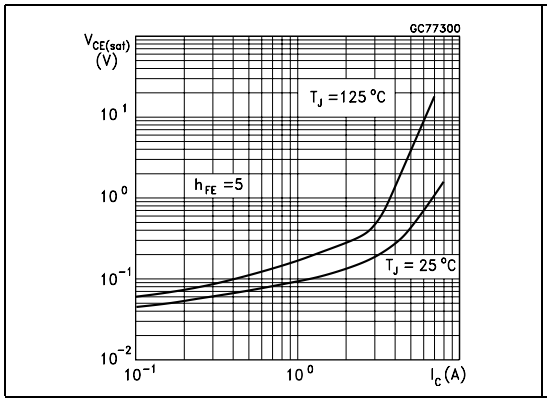

Figure 7. Base-emitter saturation voltage

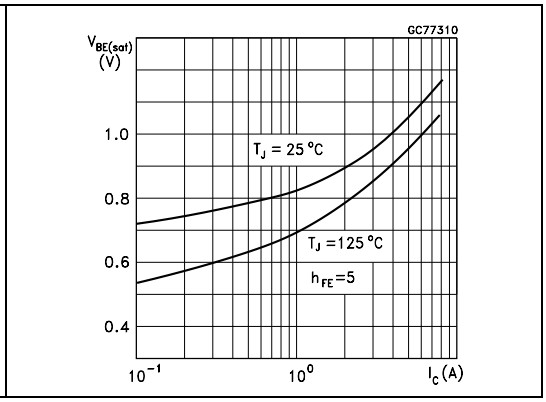

Figure 8. DC current gain

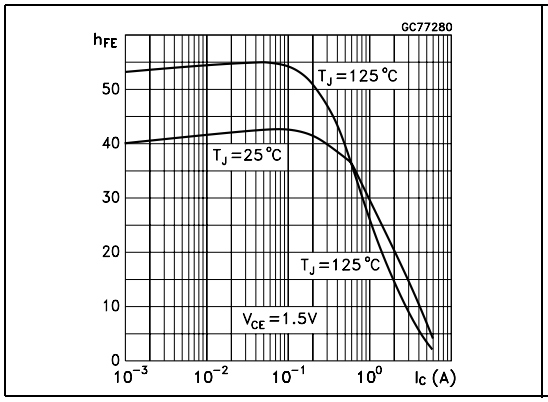

Figure 9. DC current gain

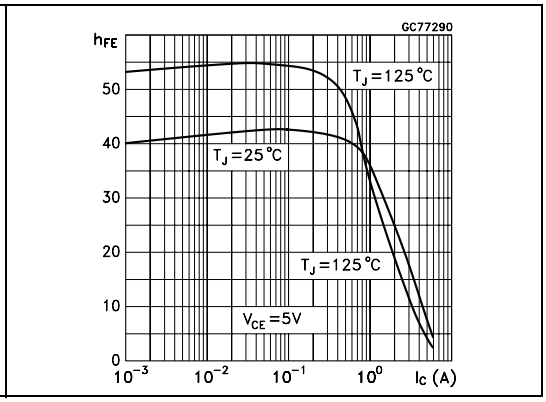

Figure 10. Inductive load storage time

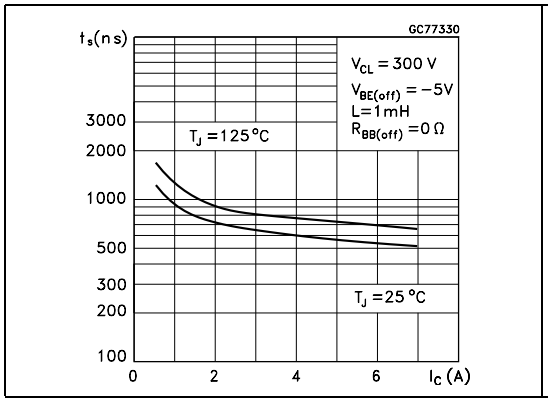

Figure 11. Inductive load fall time

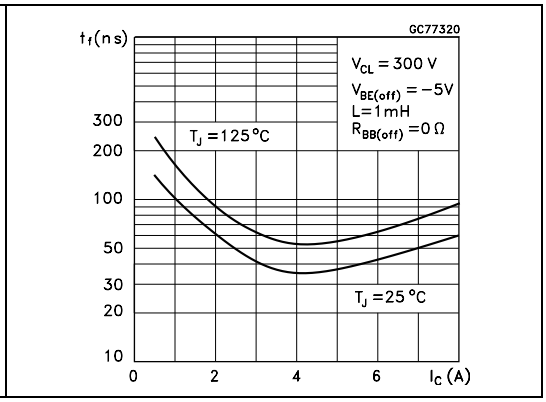

Figure 12. Reverse biased safe operating area

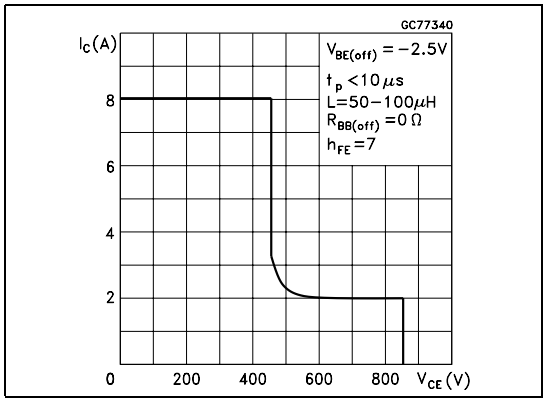

Distributor of STMicroelectronics: Excellent Integrated System Limited
Datasheet of BULB49DT4 - TRANSISTOR HIGH VOLTAGE
Contact us: sales@integrated-circuit.com Website: www.integrated-circuit.com

2.2 Test circuits

Figure 13. Resistive load switching test circuit

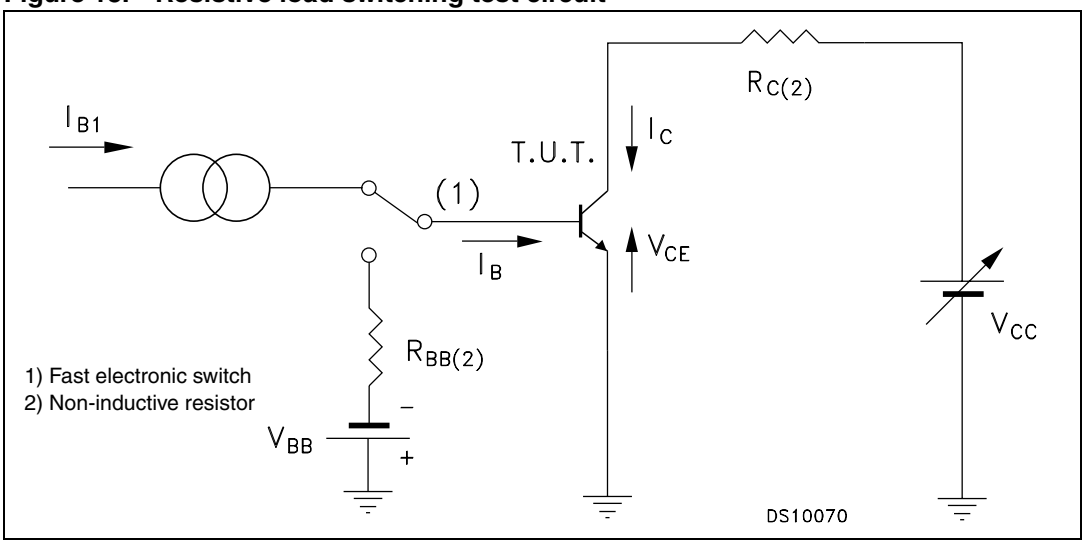

Figure 14. Inductive load switching test circuit

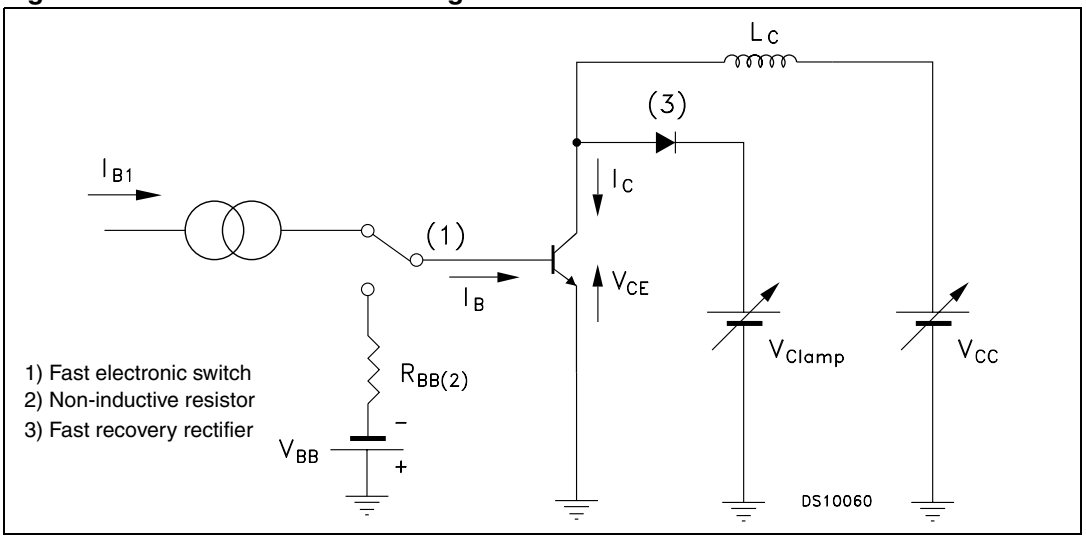

Distributor of STMicroelectronics: Excellent Integrated System Limited
Datasheet of BULB49DT4 - TRANSISTOR HIGH VOLTAGE
Contact us: sales@integrated-circuit.com Website: www.integrated-circuit.com

3 Package mechanical data

In order to meet environmental requirements, ST offers these devices in ECOPACK® packages. These packages have a lead-free second level interconnect. The category of second level interconnect is marked on the package and on the inner box label, in compliance with JEDEC Standard JESD97. The maximum ratings related to soldering conditions are also marked on the inner box label. ECOPACK is an ST trademark. ECOPACK specifications are available at: www.st.com

TO-220 mechanical data

Dim	mm			inch		
	Min	Typ	Max	Min	Typ	Max
A	4.40		4.60	0.173		0.181
b	0.61		0.88	0.024		0.034
b1	1.14		1.70	0.044		0.066
c	0.48		0.70	0.019		0.027
D	15.25		15.75	0.6		0.62
D1		1.27			0.050	
E	10		10.40	0.393		0.409
e	2.40		2.70	0.094		0.106
e1	4.95		5.15	0.194		0.202
F	1.23		1.32	0.048		0.051
H1	6.20		6.60	0.244		0.256
J1	2.40		2.72	0.094		0.107
L	13		14	0.511		0.551
L1	3.50		3.93	0.137		0.154
L20		16.40			0.645	
L30		28.90			1.137	
ØP	3.75		3.85	0.147		0.151
Q	2.65		2.95	0.104		0.116

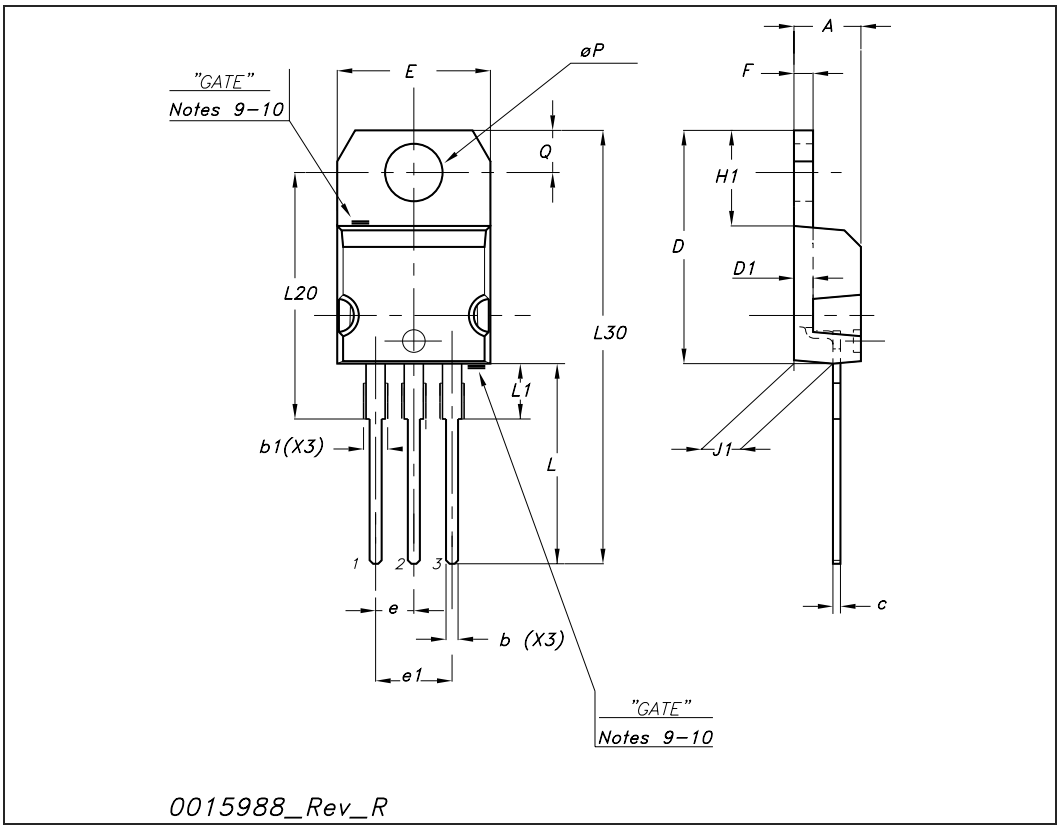

TO-220FP mechanical data

Dim.	mm.			inch		
	Min.	Typ	Max.	Min.	Typ.	Max.
A	4.40		4.60	0.173		0.181
B	2.5		2.7	0.098		0.106
D	2.5		2.75	0.098		0.108
E	0.45		0.70	0.017		0.027
F	0.75		1.00	0.030		0.039
F1	1.15		1.50	0.045		0.067
F2	1.15		1.50	0.045		0.067
G	4.95		5.20	0.195		0.204
G1	2.40		2.70	0.094		0.106
H	10		10.40	0.393		0.409
L2		16			0.630	
L3	28.6		30.6	1.126		1.204
L4	9.80		10.60	0.385		0.417
L5	2.9		3.6	0.114		0.141
L6	15.90		16.40	0.626		0.645
L7	9		9.30	0.354		0.366
Dia	3		3.2	0.118		0.126

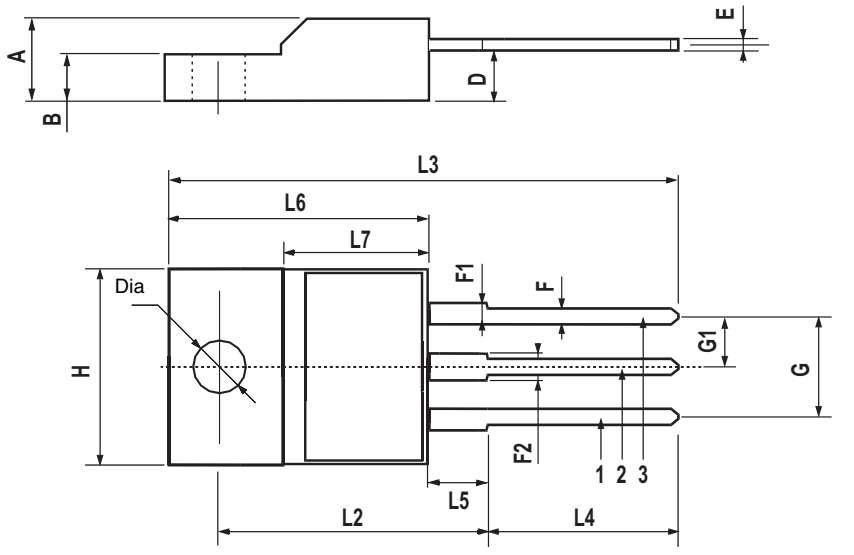

I²PAK (TO-262) mechanical data

Dim	mm			inch		
	Min	Typ	Max	Min	Typ	Max
A	4.40		4.60	0.173		0.181
A1	2.40		2.72	0.094		0.107
b	0.61		0.88	0.024		0.034
b1	1.14		1.70	0.044		0.066
c	0.49		0.70	0.019		0.027
c2	1.23		1.32	0.048		0.052
D	8.95		9.35	0.352		0.368
e	2.40		2.70	0.094		0.106
e1	4.95		5.15	0.194		0.202
E	10		10.40	0.393		0.410
L	13		14	0.511		0.551
L1	3.50		3.93	0.137		0.154
L2	1.27		1.40	0.050		0.055

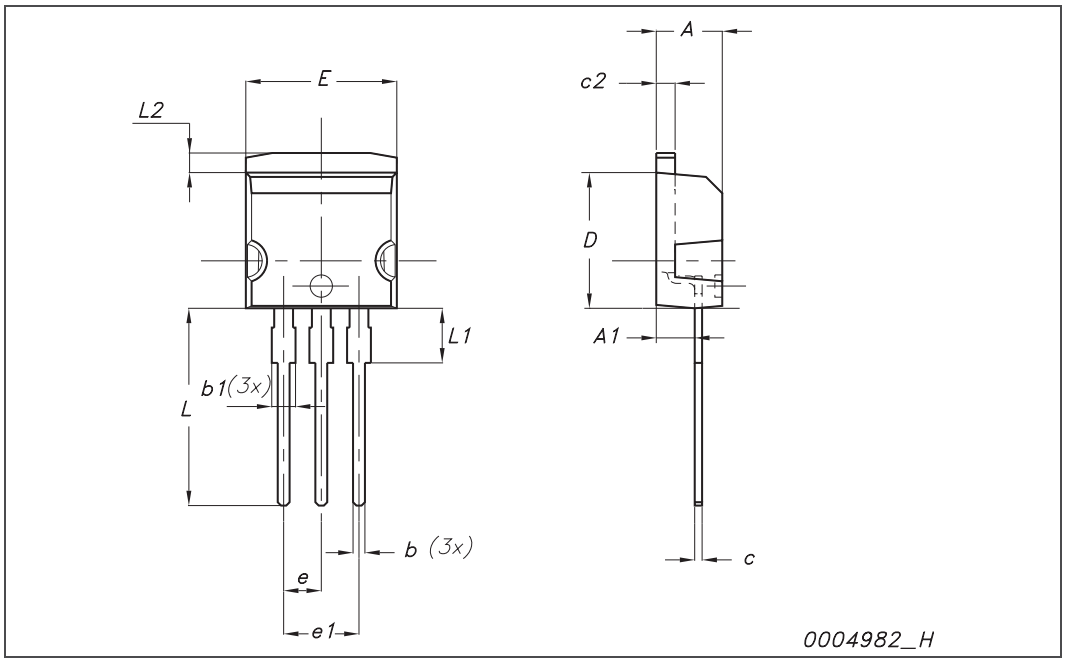

D²PAK (TO-263) mechanical data

Dim	mm			inch		
	Min	Typ	Max	Min	Typ	Max
A	4.40		4.60	0.173		0.181
A1	0.03		0.23	0.001		0.009
b	0.70		0.93	0.027		0.037
b2	1.14		1.70	0.045		0.067
c	0.45		0.60	0.017		0.024
c2	1.23		1.36	0.048		0.053
D	8.95		9.35	0.352		0.368
D1	7.50			0.295		
E	10		10.40	0.394		0.409
E1	8.50			0.334		
e		2.54			0.1	
e1	4.88		5.28	0.192		0.208
H	15		15.85	0.590		0.624
J1	2.49		2.69	0.099		0.106
L	2.29		2.79	0.090		0.110
L1	1.27		1.40	0.05		0.055
L2	1.30		1.75	0.051		0.069
R		0.4			0.016	
V2	0°		8°	0°		8°

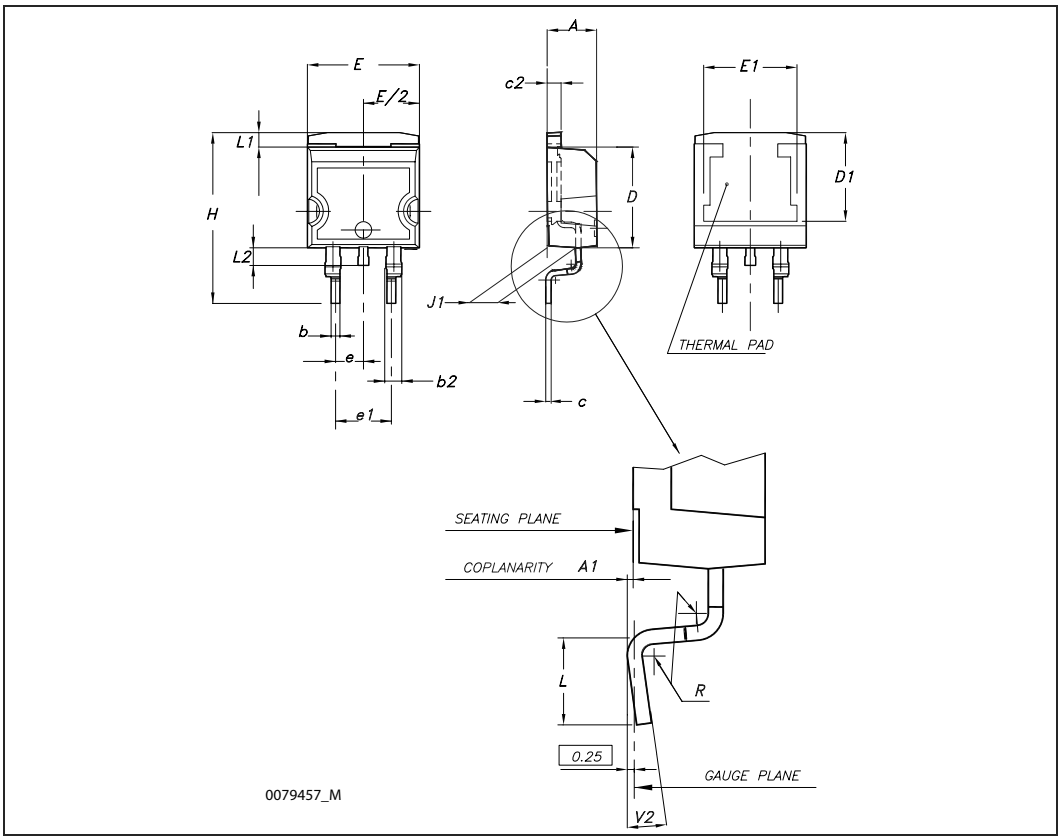

Distributor of STMicroelectronics: Excellent Integrated System Limited
Datasheet of BULB49DT4 - TRANSISTOR HIGH VOLTAGE
Contact us: sales@integrated-circuit.com Website: www.integrated-circuit.com

4 Packaging information

D^{2}PAK FOOTPRINT

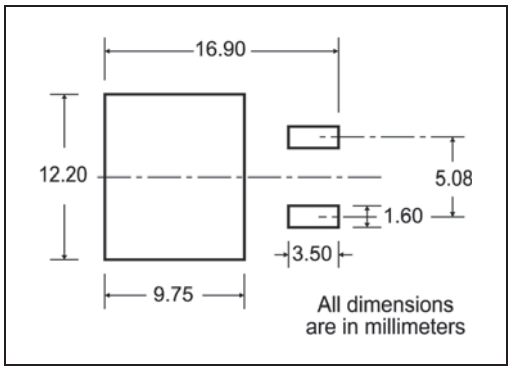

TAPE AND REEL SHIPMENT

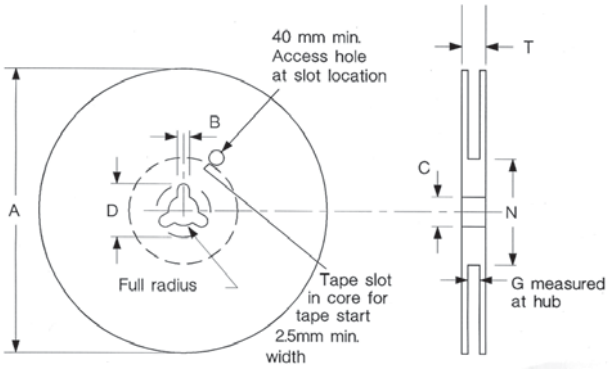

REEL MECHANICAL DATA

DIM.	mm		inch	
	MIN.	MAX.	MIN.	MAX.
A		330		12.992
B	1.5		0.059	
C	12.8	13.2	0.504	0.520
D	20.2		0795	
G	24.4	26.4	0.960	1.039
N	100		3.937	
T		30.4		1.197

BASE QTY	BULK QTY
1000	1000

TAPE MECHANICAL DATA

DIM.	mm		inch	
	MIN.	MAX.	MIN.	MAX.
A0	10.5	10.7	0.413	0.421
B0	15.7	15.9	0.618	0.626
D	1.5	1.6	0.059	0.063
D1	1.59	1.61	0.062	0.063
E	1.65	1.85	0.065	0.073
F	11.4	11.6	0.449	0.456
K0	4.8	5.0	0.189	0.197
P0	3.9	4.1	0.153	0.161
P1	11.9	12.1	0.468	0.476
P2	1.9	2.1	0.075	0.082
R	50		1.574	
T	0.25	0.35	0.0098	0.0137
W	23.7	24.3	0.933	0.956

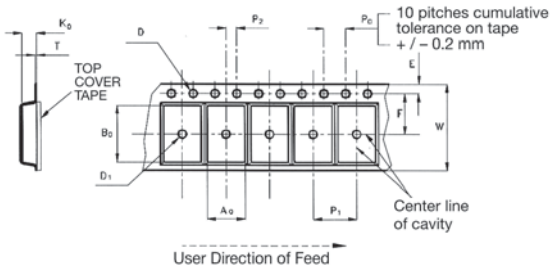

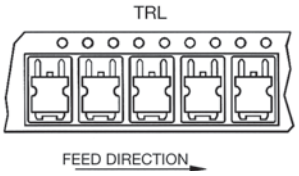

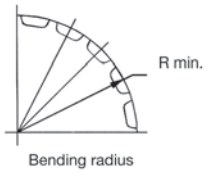

Distributor of STMicroelectronics: Excellent Integrated System Limited
Datasheet of BULB49DT4 - TRANSISTOR HIGH VOLTAGE
Contact us: sales@integrated-circuit.com Website: www.integrated-circuit.com

5 Revision history

Table 5. Document revision history

Date	Revision	Changes
10-Sep-2003	1	First release.
04-May-2007	2	The document has been reformatted.
09-Jun-2008	3	Inserted devices in: D^2PAK and I^2PAK.

Please Read Carefully:

Information in this document is provided solely in connection with ST products. STMicroelectronics NV and its subsidiaries (“ST”) reserve the right to make changes, corrections, modifications or improvements, to this document, and the products and services described herein at any time, without notice.

All ST products are sold pursuant to ST’s terms and conditions of sale.

Purchasers are solely responsible for the choice, selection and use of the ST products and services described herein, and ST assumes no liability whatsoever relating to the choice, selection or use of the ST products and services described herein.

No license, express or implied, by estoppel or otherwise, to any intellectual property rights is granted under this document. If any part of this document refers to any third party products or services it shall not be deemed a license grant by ST for the use of such third party products or services, or any intellectual property contained therein or considered as a warranty covering the use in any manner whatsoever of such third party products or services or any intellectual property contained therein.

UNLESS OTHERWISE SET FORTH IN ST’S TERMS AND CONDITIONS OF SALE ST DISCLAIMS ANY EXPRESS OR IMPLIED WARRANTY WITH RESPECT TO THE USE AND/OR SALE OF ST PRODUCTS INCLUDING WITHOUT LIMITATION IMPLIED WARRANTIES OF MERCHANTABILITY, FITNESS FOR A PARTICULAR PURPOSE (AND THEIR EQUIVALENTS UNDER THE LAWS OF ANY JURISDICTION), OR INFRINGEMENT OF ANY PATENT, COPYRIGHT OR OTHER INTELLECTUAL PROPERTY RIGHT.

UNLESS EXPRESSLY APPROVED IN WRITING BY AN AUTHORIZE REPRESENTATIVE OF ST, ST PRODUCTS ARE NOT RECOMMENDED, AUTHORIZED OR WARRANTED FOR USE IN MILITARY, AIR CRAFT, SPACE, LIFE SAVING, OR LIFE SUSTAINING APPLICATIONS, NOR IN PRODUCTS OR SYSTEMS, WHERE FAILURE OR MALFUNCTION MAY RESULT IN PERSONAL INJURY, DEATH, OR SEVERE PROPERTY OR ENVIRONMENTAL DAMAGE. ST PRODUCTS WHICH ARE NOT SPECIFIED AS “AUTOMOTIVE GRADE” MAY ONLY BE USED IN AUTOMOTIVE APPLICATIONS AT USER’S OWN RISK.

Resale of ST products with provisions different from the statements and/or technical features set forth in this document shall immediately void any warranty granted by ST for the ST product or service described herein and shall not create or extend in any manner whatsoever, any liability of ST.

ST and the ST logo are trademarks or registered trademarks of ST in various countries.

Information in this document supersedes and replaces all information previously supplied.

The ST logo is a registered trademark of STMicroelectronics. All other names are the property of their respective owners.

© 2008 STMicroelectronics - All rights reserved

STMicroelectronics group of companies

Australia - Belgium - Brazil - Canada - China - Czech Republic - Finland - France - Germany - Hong Kong - India - Israel - Italy - Japan - Malaysia - Malta - Morocco - Singapore - Spain - Sweden - Switzerland - United Kingdom - United States of America

www.st.com