Excellent Integrated System Limited

Stocking Distributor

Click to view price, real time Inventory, Delivery & Lifecycle Information:

Diodes Incorporated
APT13005DI-G1

For any questions, you can email us directly:
sales@integrated-circuit.com

A Product Line of
Diodes Incorporated

APT13005D

450V NPN HIGH VOLTAGE POWER TRANSISTOR

Features

- BV_{CEO} > 450V
- BV_{CES} > 700V
- BV_{EBO} > 9V
- I_C = 4A High Collector Current
- Integrated Anti-Parallel Diode to act as free-wheeling diode
- Anti-Saturation feature
- **Lead-Free Finish; RoHS Compliant (Notes 1 & 2)**
- **Halogen and Antimony Free. "Green" Device (Note 3)**

Mechanical Data

- Case: TO220F-3, TO251, TO220AB Type C
- Case Material: Molded Plastic, "Green" Molding Compound UL Flammability Classification Rating 94V-0
- Terminals: Finish - Matte Tin Finish Leads, Solderable per MIL-STD-202, Method 208 e3
- Weight: TO251: 340mg (Approximate)
  TO220F-3: 1500mg (Approximate)
  TO220AB Type C : 2000mg (Approximate)

Applications

Low power AC-DC SMPS for:

- Battery Chargers for Mobile Phone / Tablets / Smartphones
- Power Supply for DVD / STB
- LED lighting

TO251

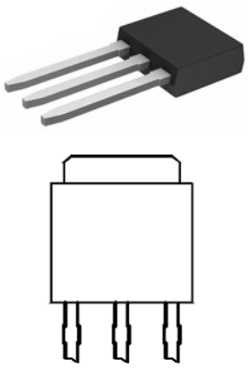

Front Face View
Pin-Out

TO220F-3
Isolated

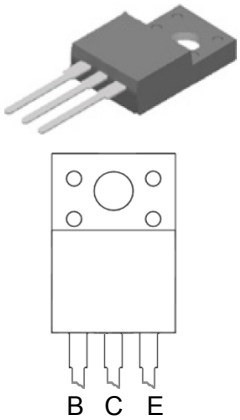

Front Face View
Pin-Out

TO220AB Type C
(TO220-3(2))
Non-isolated

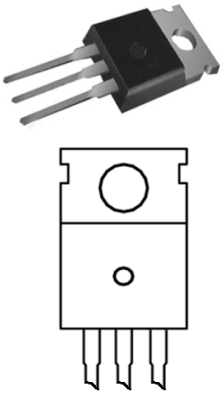

Front Face View
Pin-Out

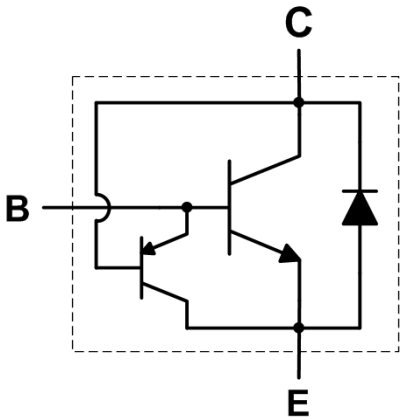

Device Schematic

Ordering Information (Note 4)

Product	Package	Marking	Quantity
APT13005DI-G1	TO251	APT13005DI-G1	3,600 per Box in Tubes
APT13005DTF-G1	TO220F-3	APT13005DTF-G1	1,000 per Box in Tubes
APT13005DT-G1	TO220AB Type C (TO220-3(2))	APT13005DT-G1	1,000 per Box in Tubes

Notes:
1. EU Directive 2002/95/EC (RoHS) & 2011/65/EU (RoHS 2) compliant. All applicable RoHS exemptions applied.
2. See http://www.diodes.com/quality/lead_free.html for more information about Diodes Incorporated's definitions of Halogen- and Antimony-free, "Green" and Lead-free.
3. Halogen- and Antimony-free "Green" products are defined as those which contain <900ppm bromine, <900ppm chlorine (<1500ppm total Br + Cl) and <1000ppm antimony compounds.
4. For packaging details, go to our website at http://www.diodes.com/products/packages.html.

© Diodes Incorporated

Marking Information

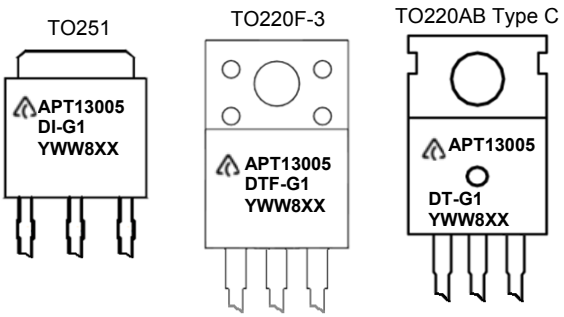

= Manufacturers' code marking
For TO251, APT13005DI-G1 = Product Type Marking ID
For TO220F-3, APT13005DTF-G1 = Product Type Marking ID
For TO220AB Type C, APT13005DT-G1 = Product Type Marking ID
YWW = Date Code Marking
e.g. 312 = Year 2013, Week 12.
8 = Assembly site code
XX = Batch Number

Absolute Maximum Ratings (@T_A = +25°C, unless otherwise specified.)

Characteristic	Symbol	Value	Unit
Collector-Emitter Voltage	V_{CES}	700	V
Collector-Emitter Voltage	V_{CEO}	450	V
Emitter-Base Voltage	V_{EBO}	9	V
Collector Current	I_C	4	A
Peak Collector Current	I_{CM}	8	A
Base Current	I_B	2	A
Peak Base Current	I_{BM}	4	A

Thermal Characteristics (@T_A = +25°C, unless otherwise specified.)

Characteristic		Symbol	Value	Unit
Power Dissipation @T_C = +25°C	For TO251	P_D	25	W
	For TO220F-3		28	
	For TO220AB Type C		75	
Thermal Resistance, Junction to Case	For TO251	$R_{\theta JC}$	5.0	°C/W
	For TO220F-3		4.5	
	For TO220AB Type C		1.67	
Operating and Storage Temperature Range		T_J, T_{STG}	-65 to +150	°C

ESD Ratings (Note 5)

Characteristic	Symbol	Value	Unit	JEDEC Class
Electrostatic Discharge - Human Body Model	ESD HBM	8,000	V	3B
Electrostatic Discharge - Machine Model	ESD MM	400	V	C

Note: 5. Refer to JEDEC specification JESD22-A114 and JESD22-A115.

© Diodes Incorporated

Safe Operating Areas (@T_A = +25°C, unless otherwise specified.)

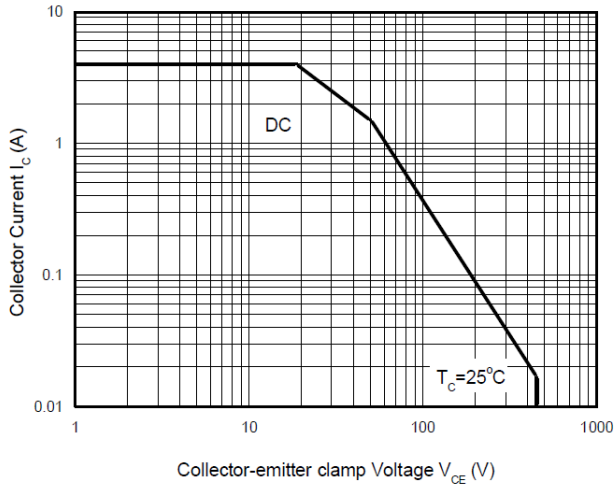

Figure 4. Safe Operating Areas
(TO-220-3 (2) Package)

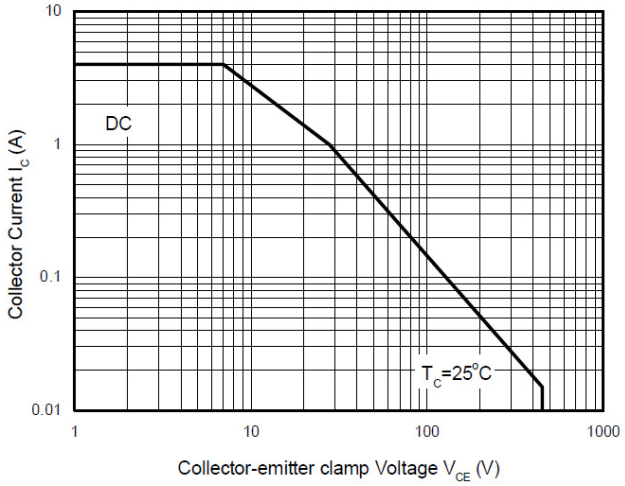

Figure 5. Safe Operating Areas
(TO-220F-3 Package)

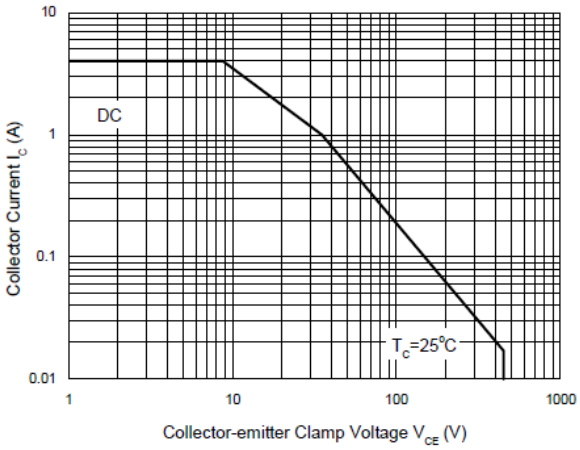

Figure 6. Safe Operating Areas
(TO-251 Package)

© Diodes Incorporated

Electrical Characteristics (@T_A = +25°C, unless otherwise specified.)

Characteristic	Symbol	Min	Typ	Max	Unit	Test Condition
Collector-Emitter Breakdown Voltage	BV_{CES}	700	—	—	V	I_C = 100μA, V_{BE} = 0V
Collector-Emitter Breakdown Voltage	BV_{CEO}	450	—	—	V	I_C = 100μA
Emitter-Base Breakdown Voltage	BV_{EBO}	9	—	—	V	I_E = 100μA
Collector Cutoff Current	I_{CEV}	—	—	10	μA	V_{CE} = 700V, V_{BE} = -1.5V
DC current transfer Static ratio (Note 6)	h_{FE}	15 8	—	35 35	— —	I_C = 1A, V_{CE} = 5V I_C = 2A, V_{CE} = 5V
Collector-Emitter Saturation Voltage (Note 6)	$V_{CE(sat)}$	— — —	— — —	0.3 0.6 0.9	V	I_C = 1A, I_B = 0.2A I_C = 2A, I_B = 0.5A I_C = 4A, I_B = 1A
Base-Emitter Saturation Voltage (Note 6)	$V_{BE(sat)}$	— —	— —	1.1 1.3	V	I_C = 1A, I_B = 0.2A I_C = 2A, I_B = 0.5A
Output Capacitance	C_{ob}	—	45	—	pF	V_{CB} = 10V, f = 0.1MHz
Transition Frequency	f_T	4	—	—	MHz	I_C = 0.5A, V_{CE} = 10V
Turn-on Time with Resistive Load	t_{on}	—	—	0.7	μs	I_C = 2A, V_{CC} = 125V I_{B1} = -I_{B2} = 0.4A
Storage Time with Resistive Load	t_s	—	—	4.0		
Fall Time with Resistive Load	t_f	—	—	0.8		

Note: 6. Measured under pulsed conditions. Pulse width ≤ 300μs. Duty cycle ≤ 2%.

© Diodes Incorporated

Typical Electrical Characteristics (@T_A = +25°C, unless otherwise specified.)

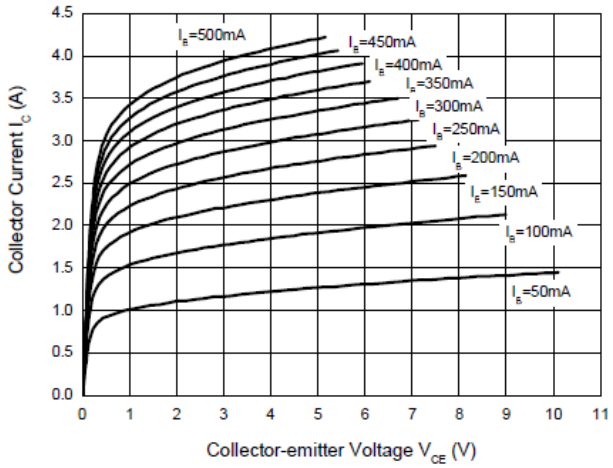

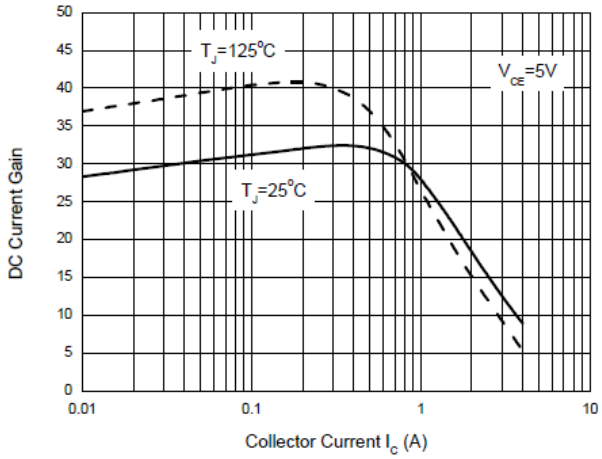

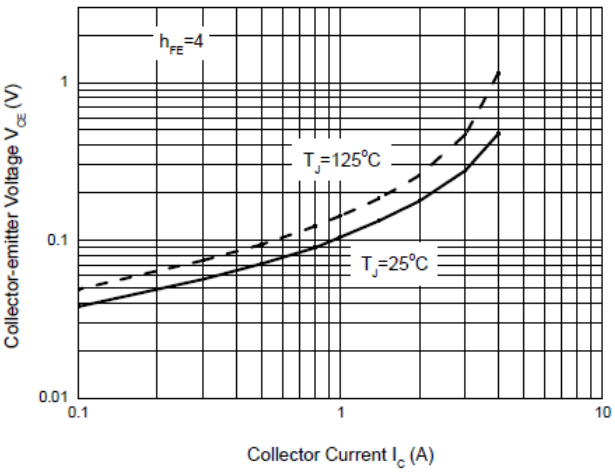

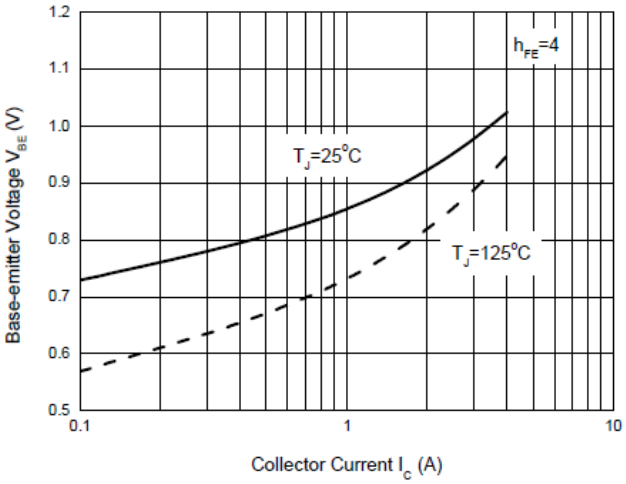

© Diodes Incorporated

Package Outline Dimensions

Please see AP02002 at http://www.diodes.com/datasheets/ap02002.pdf for latest version.

TO251

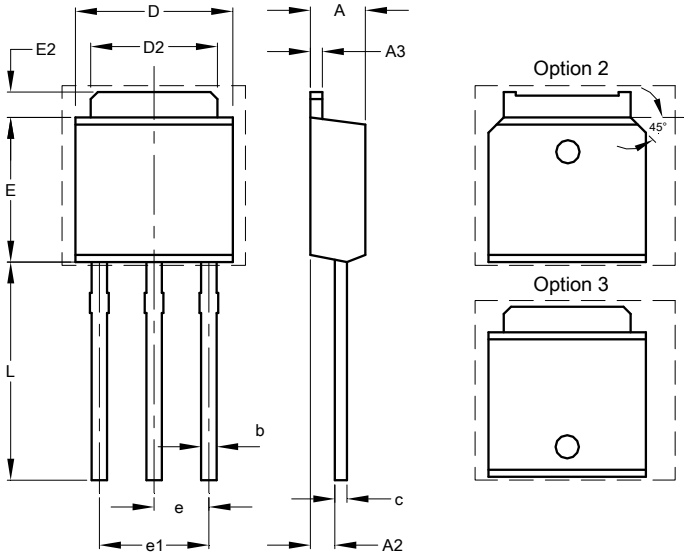

TO251		
Dim	**Min**	**Max**
A	2.200	2.400
A2	0.890	1.150
A3	0.450	0.550
b	0.550	0.740
c	0.450	0.570
D	6.400	6.750
D2	5.200	5.400
E	5.950	6.250
E2	0.900	1.250
e	2.240	2.340
e1	4.430	4.730
L	8.900	9.500
All Dimensions in mm		

TO220F-3

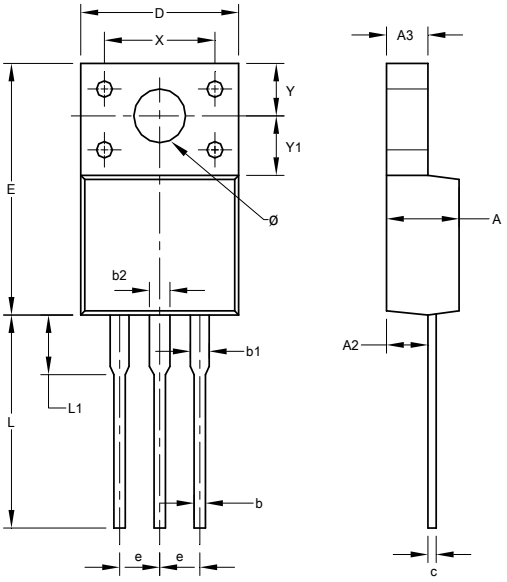

TO220F-3			
Dim	**Min**	**Max**	**Typ**
A	4.300	4.900	-
A2	2.520	2.920	-
A3	2.350	2.900	-
b	0.550	0.900	-
b1	1.000	1.400	-
b2	1.100	1.500	-
c	0.450	0.600	-
D	9.70	10.30	-
E	14.70	16.00	-
e	-	-	2.540
L	12.50	13.50	-
L1	2.790	4.500	-
X	6.90	7.10	-
Y	3.000	3.400	-
Y1	3.370	3.900	-
ø	3.000	3.550	-
All Dimensions in mm			

Note: For high voltage applications, the appropriate industry sector guidelines should be considered with regards to creepage and clearance distances between device Terminals and PCB tracking.

© Diodes Incorporated

A Product Line of
Diodes Incorporated

APT13005D

TO220AB Type C (TO220-3(2))

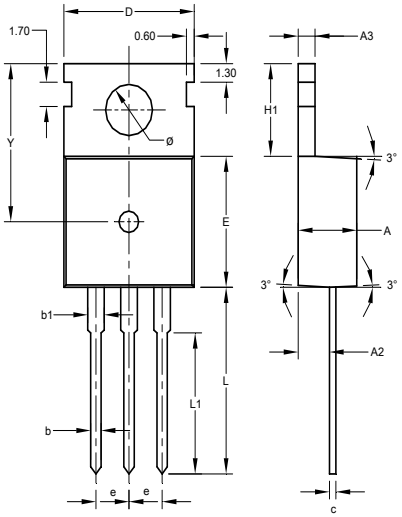

TO220AB Type C			
Dim	**Min**	**Max**	**Typ**
A	-	-	4.500
A2	-	-	2.400
A3	-	-	1.300
b	0.700	0.900	-
b1	-	-	1.270
c	0.400	0.600	-
D	9.800	10.200	-
E	9.000	9.400	-
e	-	-	2.54
H1	6.300	6.700	-
L	12.600	13.600	-
L1	9.600	10.600	-
Y	-	-	11.100
Ø	3.560	3.640	-
All Dimensions in mm			

IMPORTANT NOTICE

DIODES INCORPORATED MAKES NO WARRANTY OF ANY KIND, EXPRESS OR IMPLIED, WITH REGARDS TO THIS DOCUMENT, INCLUDING, BUT NOT LIMITED TO, THE IMPLIED WARRANTIES OF MERCHANTABILITY AND FITNESS FOR A PARTICULAR PURPOSE (AND THEIR EQUIVALENTS UNDER THE LAWS OF ANY JURISDICTION).

Diodes Incorporated and its subsidiaries reserve the right to make modifications, enhancements, improvements, corrections or other changes without further notice to this document and any product described herein. Diodes Incorporated does not assume any liability arising out of the application or use of this document or any product described herein; neither does Diodes Incorporated convey any license under its patent or trademark rights, nor the rights of others. Any Customer or user of this document or products described herein in such applications shall assume all risks of such use and will agree to hold Diodes Incorporated and all the companies whose products are represented on Diodes Incorporated website, harmless against all damages.

Diodes Incorporated does not warrant or accept any liability whatsoever in respect of any products purchased through unauthorized sales channel. Should Customers purchase or use Diodes Incorporated products for any unintended or unauthorized application, Customers shall indemnify and hold Diodes Incorporated and its representatives harmless against all claims, damages, expenses, and attorney fees arising out of, directly or indirectly, any claim of personal injury or death associated with such unintended or unauthorized application.

Products described herein may be covered by one or more United States, international or foreign patents pending. Product names and markings noted herein may also be covered by one or more United States, international or foreign trademarks.

This document is written in English but may be translated into multiple languages for reference. Only the English version of this document is the final and determinative format released by Diodes Incorporated.

LIFE SUPPORT

Diodes Incorporated products are specifically not authorized for use as critical components in life support devices or systems without the express written approval of the Chief Executive Officer of Diodes Incorporated. As used herein:

A. Life support devices or systems are devices or systems which:

1. are intended to implant into the body, or

2. support or sustain life and whose failure to perform when properly used in accordance with instructions for use provided in the labeling can be reasonably expected to result in significant injury to the user.

B. A critical component is any component in a life support device or system whose failure to perform can be reasonably expected to cause the failure of the life support device or to affect its safety or effectiveness.

Customers represent that they have all necessary expertise in the safety and regulatory ramifications of their life support devices or systems, and acknowledge and agree that they are solely responsible for all legal, regulatory and safety-related requirements concerning their products and any use of Diodes Incorporated products in such safety-critical, life support devices or systems, notwithstanding any devices- or systems-related information or support that may be provided by Diodes Incorporated. Further, Customers must fully indemnify Diodes Incorporated and its representatives against any damages arising out of the use of Diodes Incorporated products in such safety-critical, life support devices or systems.

Copyright © 2014, Diodes Incorporated

www.diodes.com