# Excellent Integrated System Limited

Stocking Distributor

Click to view price, real time Inventory, Delivery & Lifecycle Information:

Panasonic Electronic Components
EHF-2BE2450

For any questions, you can email us directly:
sales@integrated-circuit.com

Messrs. Digi-Key

Issue No. : PC-02-067
Date of issue : November 15, 2002
Classification : ■ New □ Change □ Renewal

# Delivery Specification

| | |
|---|---|
| Product Description | : Balun |
| Product Part Number | : EHF2BE2450 |
| Classification of Spec | : Individual Product Specification |
| Applications | : Cellular phone |
| | For other applications, contact the undersigned in advance. |
| Term of Validity | : November 14, 2007 from the date of issue. |

| CUSTOMER USE ONLY | Receipt Record#: |
|---|---|
| This was certainly received by us.<br>1(one) copy is being returned to you. | Date of receipt: |
| | Received by:<br><br>Title:<br>Dept.: |

Matsushita Electronic Components Co., Ltd.
Network Device Company
Module Strategic Business Unit
Engineering Group HFD Team
992-1 Aiba Ohno-cho Ibi-gun Gifu 501-0598 JAPAN
Tel: +81-0585-36-2322
Fax: +81-0585-36-2344

| | |
|---|---|
| Prepared by | : H. Ito |
| Checked by | : M. Mizuno |
| Authorized by | : M. Mizuno |
| Title | : Manager of Engineering |

[Shape, appearance, dimension] Unit: mm

<Top view> <Bottom and side view>

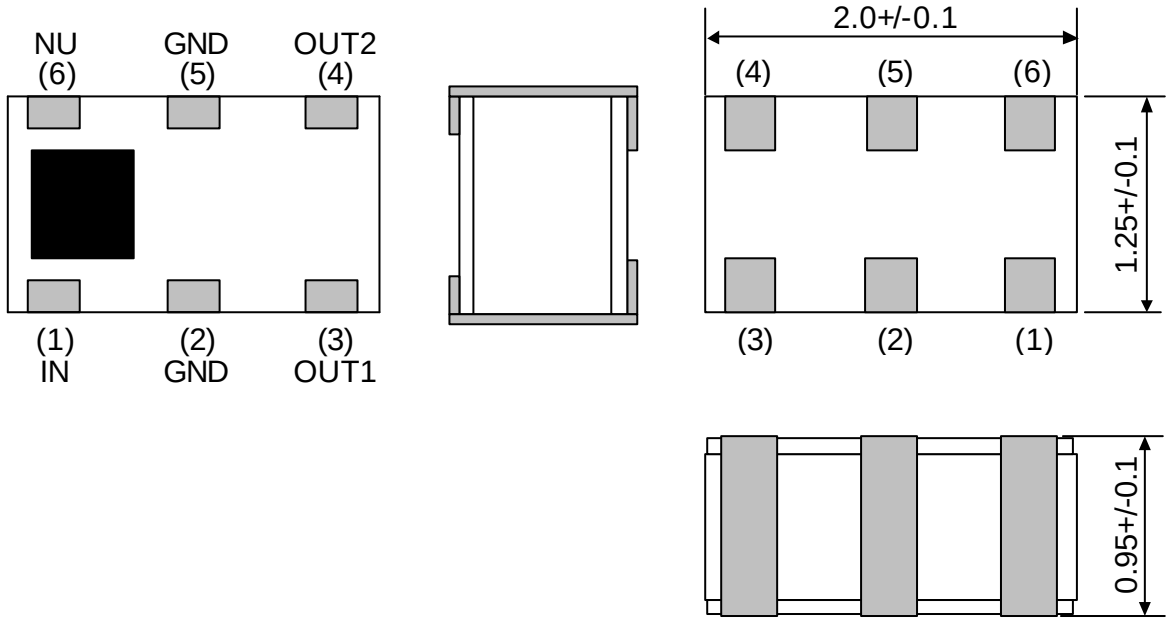


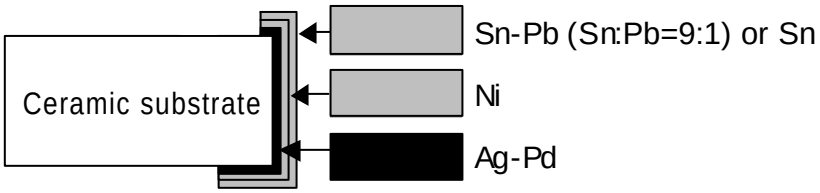


Note 1) “typ” is used where no dimensional tolerance applies.

| Item | Description |
|---|---|
| Appearance/ construction | Product surface shall be covered with a protective film, which does not easily separate nor present noticeable unevenness, scratches, pinholes, color changes etc. |
| | Terminals shall ensure practically acceptable quality. |
| | Substrate shall be as shown in the drawing with no excessive chippings, scratches, burrs, or cracks. |
| Marking | Shall be legible in black (with printing paste). |
| Remarks | ■ marked side for pin 1. |

| Balun | | Delivery Specification | | | | EHF2BE2450 Appearance |
|---|---|---|---|---|---|---|
| Enact. Date November 15, 2002 | P.S.M | Approval | Check | Plan | | |
| Enfo. Date November 15, 2002 | ----- | M. Mizuno | M. Mizuno | H. Ito | | Drawing No. 151-EHF-2BE2450 9-1 |

[Absolute maximum ratings]

| No. | Item | Symbol | Rating | Unit | Remarks |
|---|---|---|---|---|---|
| 1 | Maximum input power | Pmax | 100 | mW | DC voltage is 0V. |
| 2 | Operating temperature | Topr | -30…+85 | degC | |
| 3 | Storage temperature | Tstg | -40…+85 | degC | |

Note: This component cannot apply a DC Bias.

[Electrical characteristics] T=-30…+85degC

| No. | Item | Test Circuit | Specification | | | Unit |
|---|---|---|---|---|---|---|
| | | | Min. | Typ. | Max. | |
| 1 | Frequency | - | 2400 | - | 2500 | MHz |
| 2 | Insertion loss (Back to back) | Fig-2 | - | - | 1.0 | dB |
| 3 | Unbalance impedance | - | - | 50 | - | ohm |
| 4 | Balance impedance | - | - | 100 | - | ohm |
| 5 | Unbalance port VSWR | Fig-1 | - | - | 2.0 | - |
| 6 | Amplitude balance | Fig-1 | -1.5 | - | 1.5 | dB |
| 7 | Phase balance | Fig-1 | 165 | 180 | 195 | deg |

[Internal circuitry]

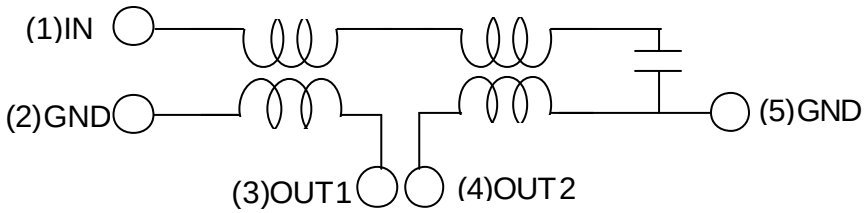


[Measuring circuit]

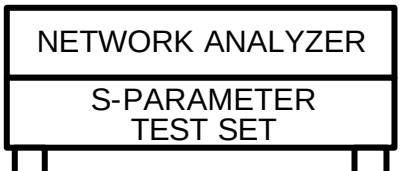


FIG.1

< Phase balance measurement >
•Phase1
A=IN, B=OUT, C=Terminal resistor (50 ohm)
•Phase2
A=IN, C=OUT, B=Terminal resistor (50 ohm)
•Phase balance
Phase balance=Phase1-Phase2
< Insertion loss measurement >
Assuming the loss as “Loss” when D=IN, E=OUT
Insertion loss for a device is “Loss”/2

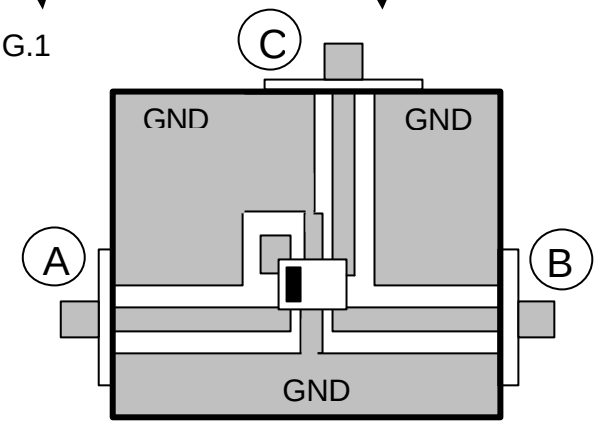


FIG.2

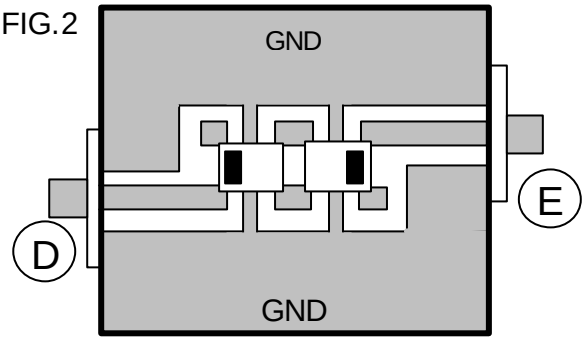


| Balun | Delivery Specification | | | | EHF2BE2450 Specification and measurement |
|---|---|---|---|---|---|
| Enact. Date November 15, 2002 | P.S.M | Approval | Check | Plan | |
| Enfo. Date November 15, 2002 | ----- | M. Mizuno | M. Mizuno | H. Ito | Drawing No. 151-EHF-2BE2450 9-2 |

[Terminal dimensions] Unit: mm

<Bottom>

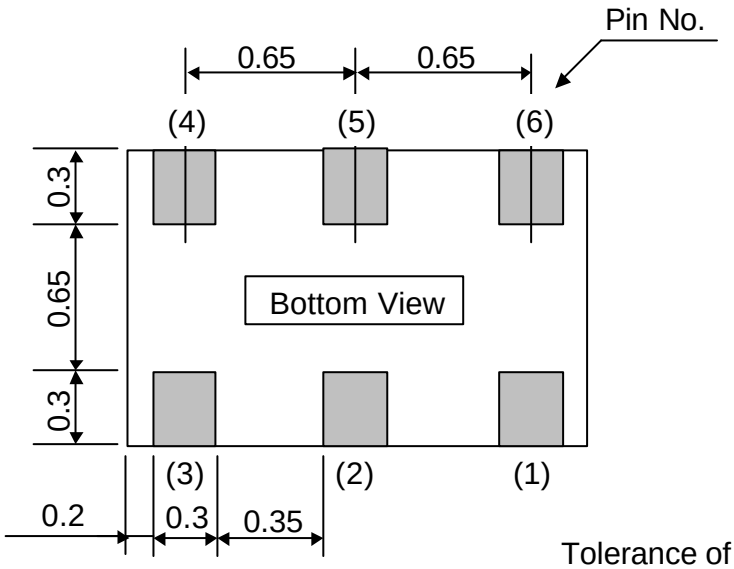


Tolerance of
Terminal dimensions: +/-0.15

[Recommended PCB pad dimensions] Unit: mm

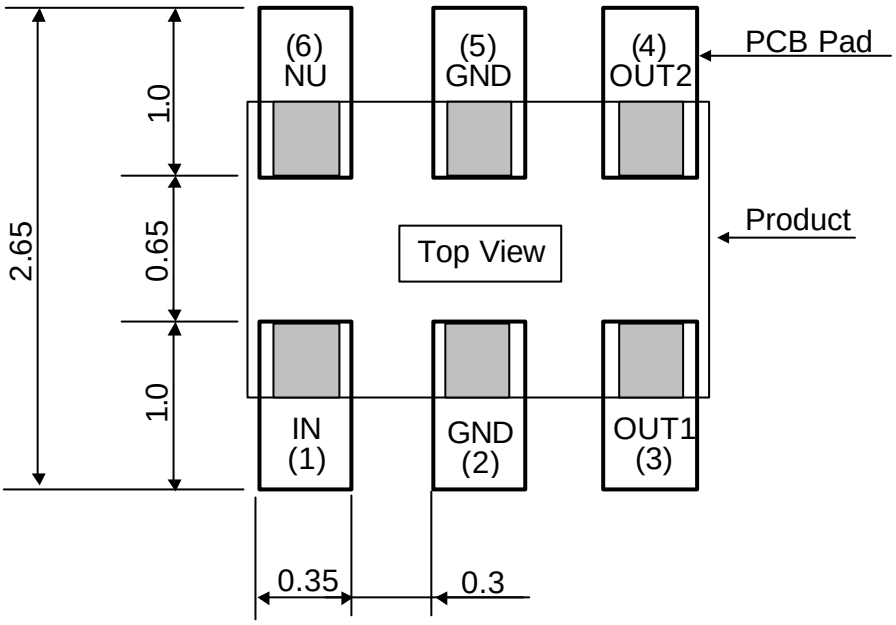


| Balun | | | Delivery Specification | | | EHF2BE2450 Terminals/Recommended lands |
|---|---|---|---|---|---|---|
| Enact. Date November 15, 2002 | P.S.M | Approval | Check | Plan | | |
| Enfo. Date November 15, 2002 | ----- | M. Mizuno | M. Mizuno | H. Ito | | Drawing No. 151-EHF-2BE2450 9-3 |

[Quality characteristics]

| Test item | Test condition | Judgment criteria |
|---|---|---|
| High temperature | +85degC, 1000h | No abnormality shall be observed in appearance or electrical characteristics. |
| Low temperature | -40degC, 1000 h | |
| High-temperature high-humidity storage | +60degC, 90%RH, 1000h | |
| Pressure Pot | +121degC, 99%RH, 2.026x$10^5$Pa, 100h | |
| Temperature cycling | -40…+85degC, Each 30 min., 200cy | |
| Vibration | 10…500Hz, 10G, in each direction of XYZ, 2h30min. | |
| Impact | 100G, 6mS, Half sinusoidal wave, in each direction of XYZ, 3 times | |
| Shock (Drop) | 1.8m, 6 facesx6cy(36 times with 100g Dummy Load) | |
| Electro static discharge | 200pF, 0 ohm, +/-200V, Each 5 times | |
| Soldering heat resistance | Manual hot gas: 260+/-10degC, 30 sec., 2 times | Over 90% of the terminal surface shall be covered with solder. |
| | Soldering iron: 260+/-10degC, 3 sec., 2 times | |
| | Reflow: 260degC peak, 2 times | |
| Solder ability | Solder bath: 235+/-5degC, 2 sec. | Over 95% of the terminal surface shall be covered with solder. |
| | Reflow: 230degC | |
| Board warping | Assemble this component on a PC board with 0.8mm thickness using the recommended soldering condition shown below, and apply a bending force of 3mm warping at a rate of 1mm/sec. 5 seconds and 5 times. 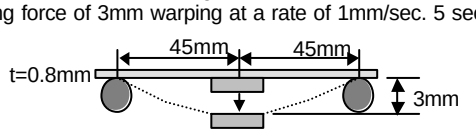  | There should not be any cracks in the component or solder joints, no abnormality in electrical characteristics. |
| Terminal removal | Solder a component on a PC board using the recommended condition shown below and then press the component sideways at 1mm/sec. Destruction limit 9.8N or greater. | |
| Seating plane co-planarity | Within 0.1mm | |

< Recommended soldering condition >

Diagram1 Shown below is a recommended reflow soldering condition.

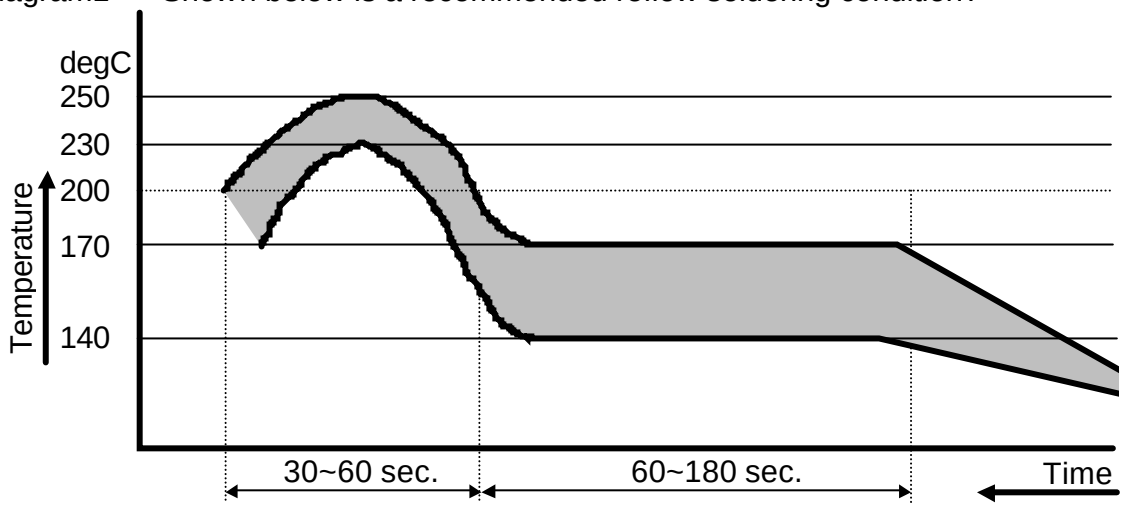


| Balun | | | | | Delivery Specification | EHF2BE2450 Quality Characteristics |
|---|---|---|---|---|---|---|
| Enact. Date November 15, 2002 | P.S.M | Approval | Check | Plan | | |
| Enfo. Date November 15, 2002 | ----- | M. Mizuno | M. Mizuno | H. Ito | | Drawing No. 151-EHF-2BE2450 9-4 |

[Cautions for use]

(1) Operating a product over the maximum rating for even a moment may result in a product failure or breakage. Never use a product in such a condition that it may cause a safety problem.

(2) Opening or short-circuiting the product terminals or inserting a product in the reverse orientation while power is being supplied may cause a breakage. Always avoid such circumstances.

(3) Operations in a corrosive gas atmosphere or improper environments such as high-temperature, high-humidity or dewy conditions may lead to product performance deterioration, a breakage, a change in appearance etc. Please avoid such conditions, as they are unsafe.

(4) Always ground the soldering iron or soldering bath used for assembly operation to avoid any excessive voltage applied to a product.

(5) After soldering with solder bridges, incomplete soldering or in the reverse orientation, supplying power may result in a product breakage. Please confirm the soldered condition before supplying power to the product.

(6) Excessive stress on the terminals may cause a contact failure or performance deterioration. Please use caution.

(7) Please provide a fail-safe provision in the product you design by taking any failure of our product into consideration.

(8) This product does not include a DC-cutting device. Application of a DC voltage between the Balance port and the Unbalance port may cause product deterioration or breakage.

* If any question arises about the safety of this product, please contact us immediately with a request for an engineering examination.

[Remarks]

*1: All of the materials used in this product are those listed as the existing chemical substances based on the “Law for examination and regulation of manufacture of chemical substances”.

*2: The production process of this product does not use any ozone-depleting chemicals (OZC) regulated by the Montreal Protocol.

*3: Validity of this specification is 5 years from the date of issue, but the validity is considered on going unless any changes are made.

[Packaging materials]

1. Materials
   1) Embossed carrier tape (Refer to the attachment)
   2) Top tape: Anti-static
   3) Packaging box (Refer to the attachment)
   4) Packaging tape, carrier-securing adhesive tape
2. Specification

| No. | Item | Condition | Remarks |
|---|---|---|---|
| 1 | Reel outer diameter | Refer to the attachment. | |
| 2 | Reel inner diameter | Refer to the attachment. | |
| 3 | Reel inner width | Refer to the attachment. | |
| 4 | Quantity in a reel | 4000 pieces/reel | |
| 5 | Taping direction | 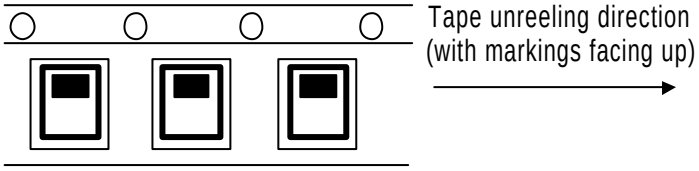  | |
| 6 | Top tape attachment position | 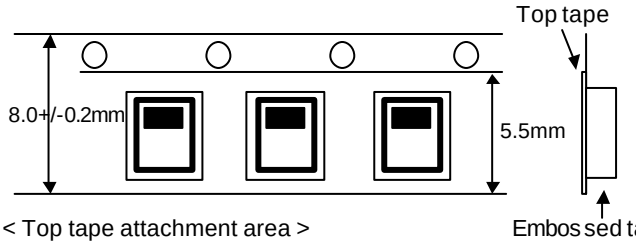  < Top tape attachment area > Top tape edge must stay inside the sprocket holes of the embossed carrier (Sprocket holes shall not be covered). | Tape breaks force. Min. 10N<br>Top cover tape strength. Min. 10N<br>Tape peel force. 0.1…1.0N<br>Tape peel angle. 165…180degree<br>Reel weight. Max 1500g |
| 7 | Label attachment position | 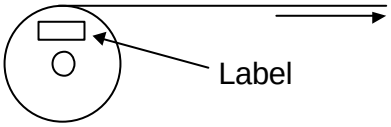  | Indicated Item<br>Pat No., Lot No.<br>Quantity, Maker<br>Country of Origin |
| 8 | Tape leader part and tape ending part | 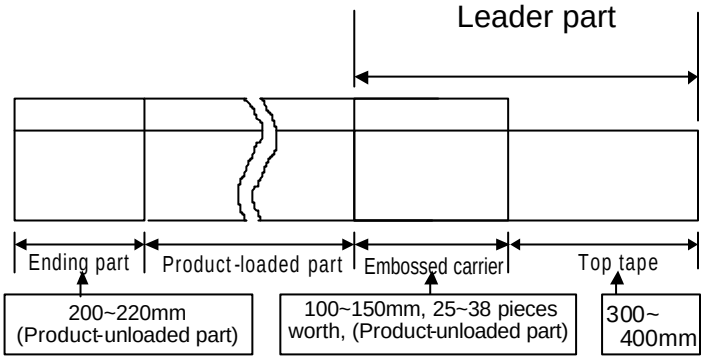  | |
| 9 | Missing products | No missing products shall be allowed. | |
| 10 | Packaged quantity in a box | 21 reels/box (Max) | 84000 pieces/box(Max) |

| Balun | | | Delivery Specification | | | EHF2BE2450<br>Packaging specification 1 |
|---|---|---|---|---|---|---|
| Enact. Date November 15, 2002 | P.S.M | Approval | Check | Plan | | |
| Enfo. Date November 15, 2002 | ----- | M. Mizuno | M. Mizuno | H. Ito | | Drawing No. 151-EHF-2BE2450 9-6 |

1. Method

1) Load products in each cavity of an embossed carrier tape, in the correct orientation, by leaving the product-unloaded part shown in Item No. 8(P9-6) of the packaging specification.

2) Heat-seal a top tape in good alignment on the carrier tape.

3) After 4000 pieces are loaded and reeled, provide a product-unloaded part at the tape-leader portion. Secure the tip of the carrier tape with a piece of adhesive tape.

4) Stack the reels (21 reels max.) and enclose them in a packaging box. Close the flaps with a piece of adhesive tape.

5) Provide markings on the packaging box.

< Items to be indicated >

1. Part No.
2. Quantity
3. Lot No.
4. Manufacturer name
5. Country of origin

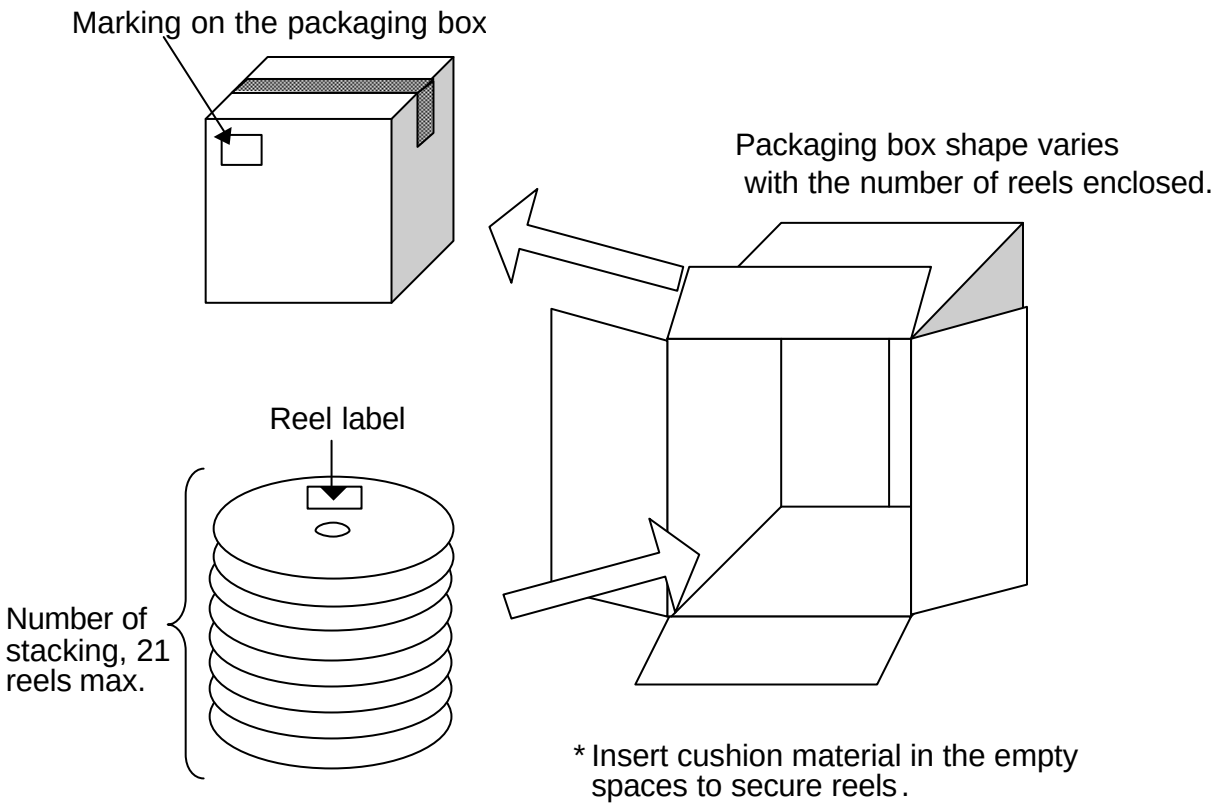


| | | | | | | |
|---|---|---|---|---|---|---|
| Balun | | | Delivery Specification | | | EHF2BE2450<br>Packaging specification 2 |
| Enact. Date November 15, 2002 | P.S.M | Approval | Check | Plan | | |
| Enfo. Date November 15, 2002 | ----- | M. Mizuno | M. Mizuno | H. Ito | | Drawing No.<br>151-EHF-2BE2450 9-7 |

[Embossed tape dimensions] Unit: mm

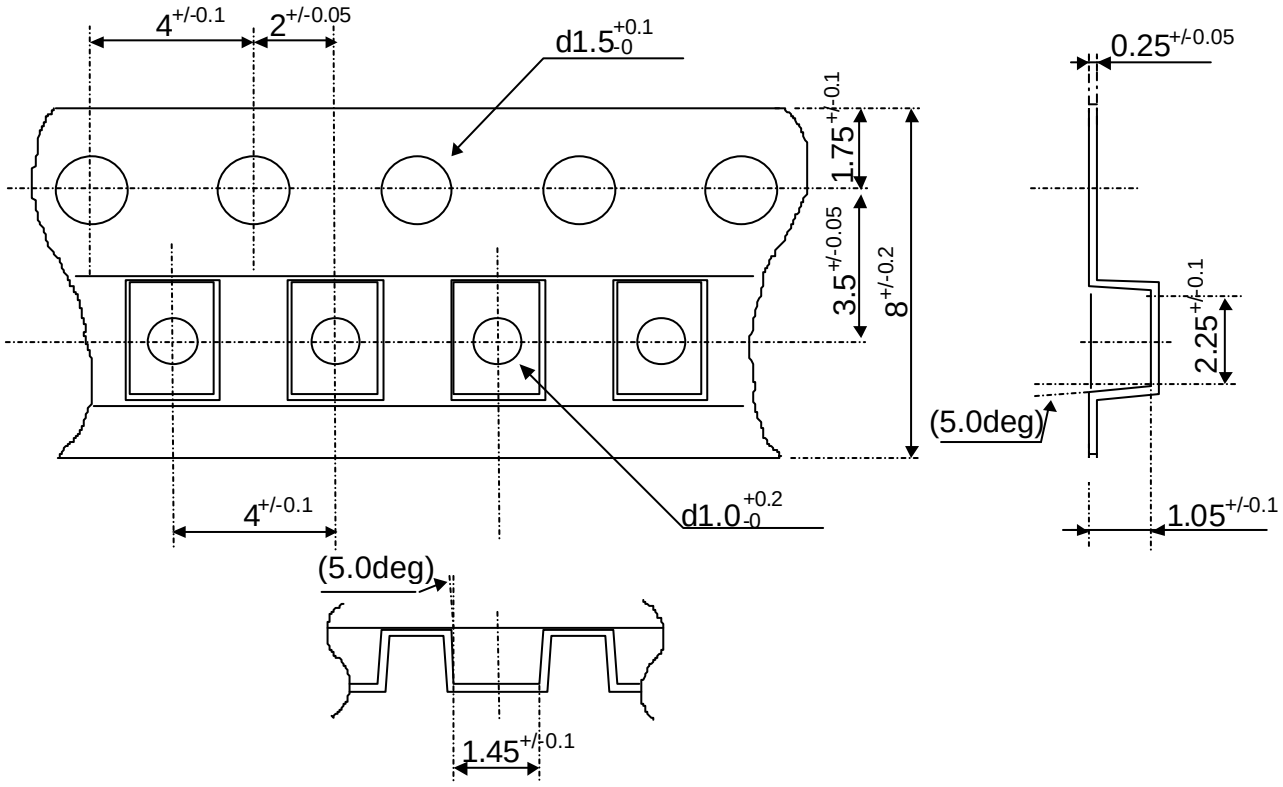


<Remarks>
(1) Unspecified corner radius shall be 0.3mm max.
(2) Cumulative pitch error of sprocket holes shall be +/-0.2mm for 10 pitches.

| Balun | | | Delivery Specification | | EHF2BE2450 Packaging specification 3 |
|---|---|---|---|---|---|
| Enact. Date November 15, 2002 | P.S.M | Approval | Check | Plan | |
| Enfo. Date November 15, 2002 | ----- | M. Mizuno | M. Mizuno | H. Ito | Drawing No. 151-EHF-2BE2450 9-8 |

[Reel dimensions] Unit: mm

(1) This reel conforms to EIAJ-RRM-08B based on EIAJ standard.

(2) Material: PS (Polystyrene)

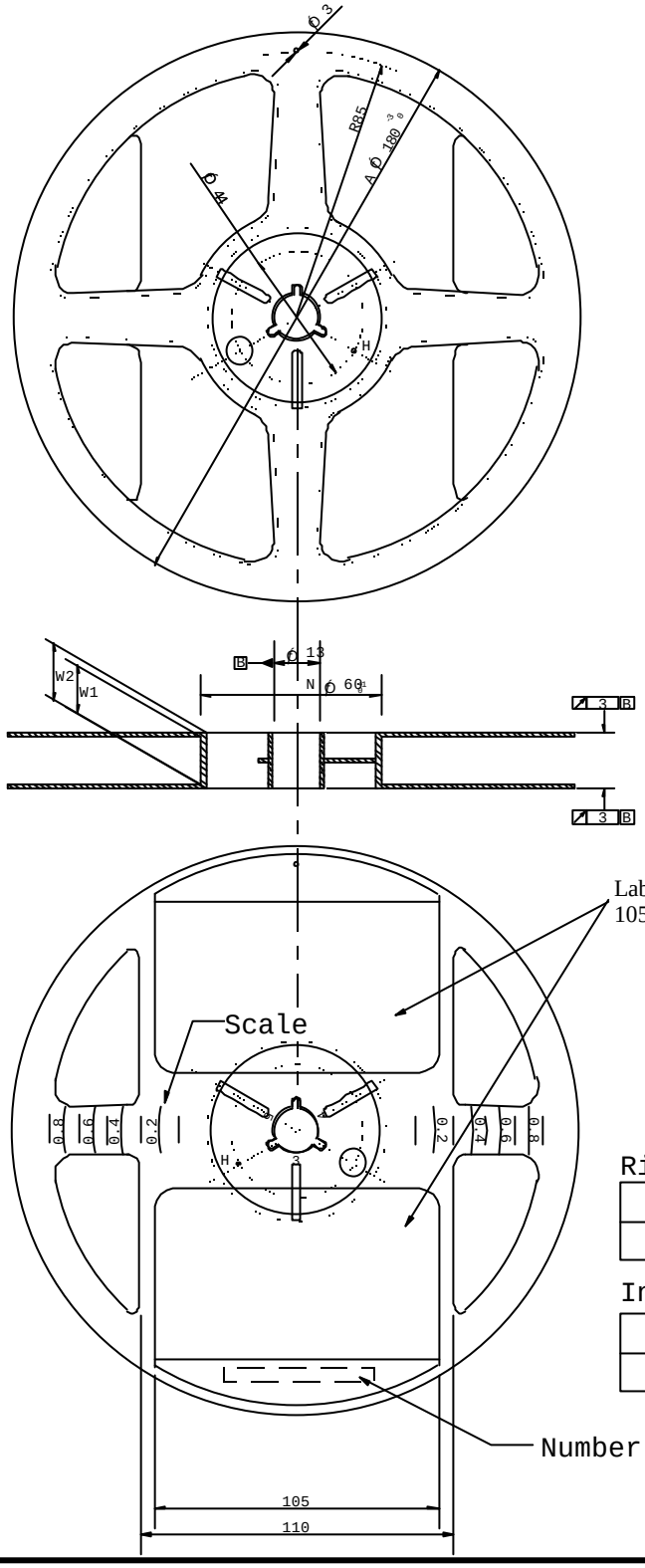


Rim , Hub

| Rim A | Hub N |
|---|---|
| 180 $^{0}_{-3}$ | 60 $^{+1}_{0}$ |

Inner width , Outer width

| Tape width | Inner width W1 | Outer width W2 |
|---|---|---|
| 8 | 9+/-0.3 | 11+/-1.0 |

| | | | | | |
|---|---|---|---|---|---|
| Balun | Delivery Specification | | | | EHF2BE2450 Packaging specification 4 |
| Enact. Date November 15, 2002 | P.S.M | Approval | Check | Plan | |
| Enfo. Date November 15, 2002 | ----- | M. Mizuno | M. Mizuno | H. Ito | Drawing No. 151-EHF-2BE2450 9-9 |