Excellent Integrated System Limited

Stocking Distributor

Click to view price, real time Inventory, Delivery & Lifecycle Information:

STMicroelectronics
M74HC574B1R

For any questions, you can email us directly:
sales@integrated-circuit.com

Distributor of STMicroelectronics: Excellent Integrated System Limited
Datasheet of M74HC574B1R - IC D-TYPE POS TRG SNGL 20DIP
Contact us: sales@integrated-circuit.com Website: www.integrated-circuit.com

M74HC574

OCTAL D-TYPE FLIP FLOP WITH 3 STATE OUTPUT NON INVERTING

- HIGH SPEED:
  f_{MAX} = 90MHz (TYP.) at V_{CC} = 6V
- LOW POWER DISSIPATION:
  I_{CC} = 4µA(MAX.) at T_A=25°C
- HIGH NOISE IMMUNITY:
  $V_{NIH} = V_{NIL}$ = 28 % V_{CC} (MIN.)
- SYMMETRICAL OUTPUT IMPEDANCE:
  $|I_{OH}| = I_{OL}$ = 6mA (MIN)
- BALANCED PROPAGATION DELAYS:
  $t_{PLH} \cong t_{PHL}$
- WIDE OPERATING VOLTAGE RANGE:
  V_{CC} (OPR) = 2V to 6V
- PIN AND FUNCTION COMPATIBLE WITH 74 SERIES 574

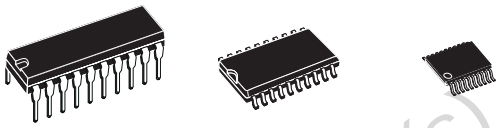

DIP SOP TSSOP

ORDER CODES

PACKAGE	TUBE	T & R
DIP	M74HC574B1R	
SOP	M74HC574M1R	M74HC574RM13TR
TSSOP		M74HC574TTR

DESCRIPTION

The M74HC574 is an high speed CMOS OCTAL D-TYPE FLIP FLOP WITH 3-STATE OUTPUTS INVERTING fabricated with sub-micron silicon gate C^2MOS technology.
This 8 bit D-TYPE FLIP FLOP is controlled by a clock input (CK) and an output enable input ($\overline{OE}$). On the positive transition of the clock, the Q outputs will be set to the logic state that were setup at the D inputs.
While the $\overline{OE}$ input is at low level, the eight outputs will be in a normal logic state (high or low logic level) and while $\overline{OE}$ is in high level the outputs will be in a high impedance state.
The output control does not affect the internal operation of flip-flops; that is, the old data can be retained or the new data can be entered even while the outputs are off.
All inputs are equipped with protection circuits against static discharge and transient excess voltage.

Obsolete Product(s) - Obsolete Product(s)

PIN CONNECTION AND IEC LOGIC SYMBOLS

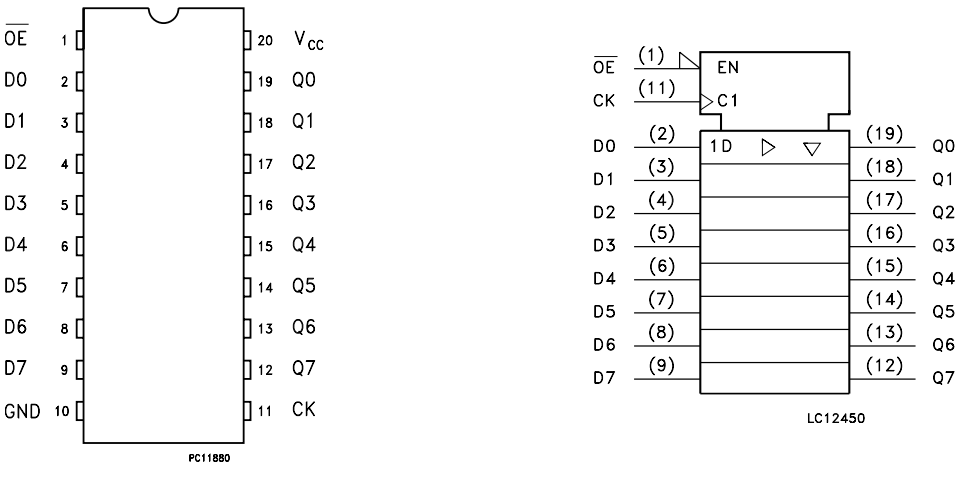

Distributor of STMicroelectronics: Excellent Integrated System Limited
Datasheet of M74HC574B1R - IC D-TYPE POS TRG SNGL 20DIP
Contact us: sales@integrated-circuit.com Website: www.integrated-circuit.com

INPUT AND OUTPUT EQUIVALENT CIRCUIT

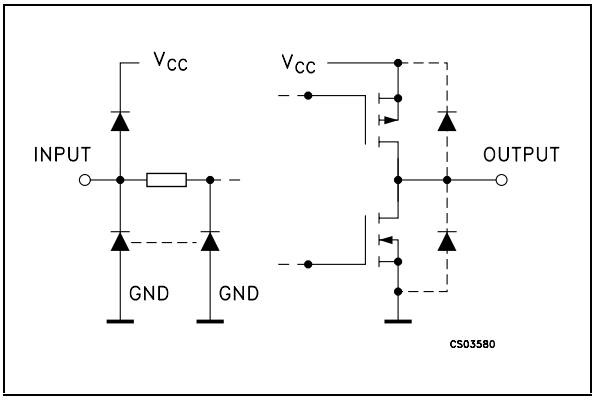

PIN DESCRIPTION

PIN No	SYMBOL	NAME AND FUNCTION
1	$\overline{OE}$	3 State Output Enable Input (Active LOW)
2, 3, 4, 5, 6, 7, 8, 9	$\overline{D0}$ to $\overline{D7}$	Data Inputs
12, 13, 14, 15, 16, 17, 18, 19	Q7 to Q0	3 State Outputs
11	CK	Clock Input (LOW to HIGH, edge triggered)
10	GND	Ground (0V)
20	V_{CC}	Positive Supply Voltage

TRUTH TABLE

INPUTS			OUTPUT
$\overline{OE}$	CK	D	Q
H	X	X	Z
L	↓	X	NO CHANGE
L	↑	L	L
L	↑	H	H

X: Don't Care
Z: High Impedance

LOGIC DIAGRAM

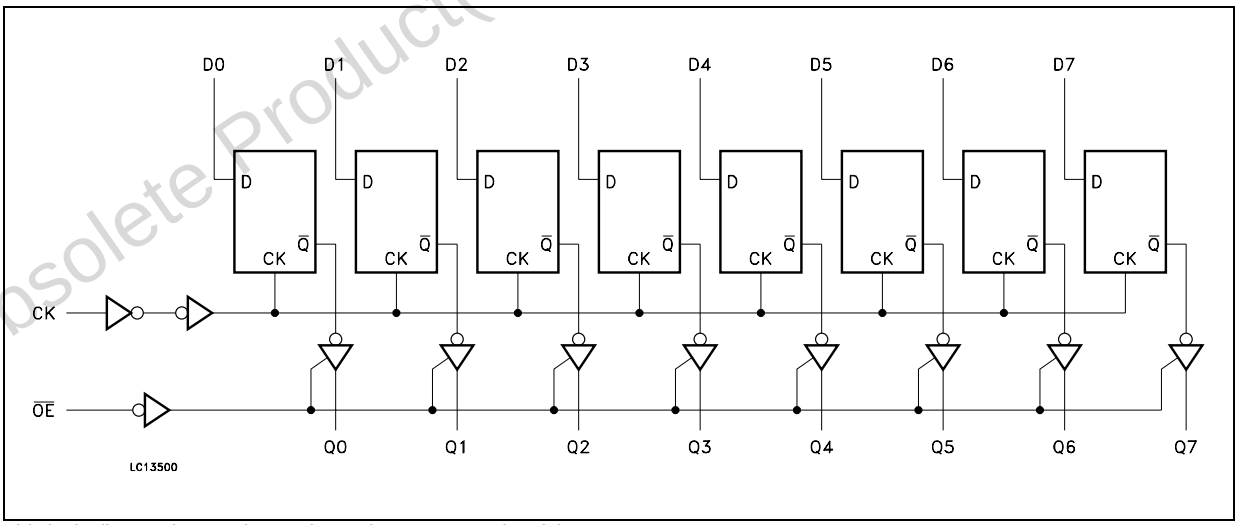

This logic diagram has not be used to estimate propagation delays

Obsolete Product(s) - Obsolete Product(s)

Distributor of STMicroelectronics: Excellent Integrated System Limited
Datasheet of M74HC574B1R - IC D-TYPE POS TRG SNGL 20DIP
Contact us: sales@integrated-circuit.com Website: www.integrated-circuit.com

ABSOLUTE MAXIMUM RATINGS

Symbol	Parameter	Value	Unit
V_{CC}	Supply Voltage	-0.5 to +7	V
V_I	DC Input Voltage	-0.5 to V_{CC} + 0.5	V
V_O	DC Output Voltage	-0.5 to V_{CC} + 0.5	V
I_{IK}	DC Input Diode Current	± 20	mA
I_{OK}	DC Output Diode Current	± 20	mA
I_O	DC Output Current	± 35	mA
I_{CC} or I_{GND}	DC V_{CC} or Ground Current	± 70	mA
P_D	Power Dissipation	500(*)	mW
T_{stg}	Storage Temperature	-65 to +150	°C
T_L	Lead Temperature (10 sec)	300	°C

Absolute Maximum Ratings are those values beyond which damage to the device may occur. Functional operation under these conditions is not implied
(*) 500mW at 65 °C; derate to 300mW by 10mW/°C from 65°C to 85°C

RECOMMENDED OPERATING CONDITIONS

Symbol	Parameter		Value	Unit
V_{CC}	Supply Voltage		2 to 6	V
V_I	Input Voltage		0 to V_{CC}	V
V_O	Output Voltage		0 to V_{CC}	V
T_{op}	Operating Temperature		-55 to 125	°C
t_r, t_f	Input Rise and Fall Time	V_{CC} = 2.0V	0 to 1000	ns
		V_{CC} = 4.5V	0 to 500	ns
		V_{CC} = 6.0V	0 to 400	ns

Obsolete Product(s) - Obsolete Product(s)

Distributor of STMicroelectronics: Excellent Integrated System Limited
Datasheet of M74HC574B1R - IC D-TYPE POS TRG SNGL 20DIP
Contact us: sales@integrated-circuit.com Website: www.integrated-circuit.com

DC SPECIFICATIONS

Symbol	Parameter	Test Condition		Value							Unit
		V_{CC} (V)		T_A = 25°C			-40 to 85°C		-55 to 125°C		
				Min.	Typ.	Max.	Min.	Max.	Min.	Max.	
V_{IH}	High Level Input Voltage	2.0		1.5			1.5		1.5		V
		4.5		3.15			3.15		3.15		
		6.0		4.2			4.2		4.2		
V_{IL}	Low Level Input Voltage	2.0				0.5		0.5		0.5	V
		4.5				1.35		1.35		1.35	
		6.0				1.8		1.8		1.8	
V_{OH}	High Level Output Voltage	2.0	I_O=-20 µA	1.9	2.0		1.9		1.9		V
		4.5	I_O=-20 µA	4.4	4.5		4.4		4.4		
		6.0	I_O=-20 µA	5.9	6.0		5.9		5.9		
		4.5	I_O=-6.0 mA	4.18	4.31		4.13		4.10		
		6.0	I_O=-7.8 mA	5.68	5.8		5.63		5.60		
V_{OL}	Low Level Output Voltage	2.0	I_O=20 µA		0.0	0.1		0.1		0.1	V
		4.5	I_O=20 µA		0.0	0.1		0.1		0.1	
		6.0	I_O=20 µA		0.0	0.1		0.1		0.1	
		4.5	I_O=6.0 mA		0.17	0.26		0.33		0.40	
		6.0	I_O=7.8 mA		0.18	0.26		0.33		0.40	
I_I	Input Leakage Current	6.0	V_I = V_{CC} or GND			± 0.1		± 1		± 1	µA
I_{OZ}	High Impedance Output Leakage Current	6.0	V_I = V_{IH} or V_{IL} V_O = V_{CC} or GND			± 0.5		± 5		± 10	µA
I_{CC}	Quiescent Supply Current	6.0	V_I = V_{CC} or GND			4		40		80	µA

Obsolete Product(s) - Obsolete Product(s)

Distributor of STMicroelectronics: Excellent Integrated System Limited
Datasheet of M74HC574B1R - IC D-TYPE POS TRG SNGL 20DIP
Contact us: sales@integrated-circuit.com Website: www.integrated-circuit.com

AC ELECTRICAL CHARACTERISTICS (C_L = 50 pF, Input $t_r = t_f$ = 6ns)

Symbol	Parameter	Test Condition			Value							Unit
		V_{CC} (V)	C_L (pF)		T_A = 25°C			-40 to 85°C		-55 to 125°C		
					Min.	Typ.	Max.	Min.	Max.	Min.	Max.	
t_{TLH} t_{THL}	Output Transition Time	2.0	50			25	60		75		90	ns
		4.5				7	12		15		18	
		6.0				6	10		13		15	
t_{PLH} t_{PHL}	Propagation Delay Time (CK - Q)	2.0	50			70	150		190		225	ns
		4.5				20	30		38		45	
		6.0				15	26		32		38	
		2.0	150			88	190		240		285	ns
		4.5				25	38		48		57	
		6.0				19	32		41		48	
t_{PZL} t_{PZH}	High Impedance Output Enable Time	2.0	50	R_L = 1 KΩ		48	125		155		190	ns
		4.5				15	25		31		38	
		6.0				12	21		26		32	
		2.0	150	R_L = 1 KΩ		60	165		205		250	ns
		4.5				20	33		41		50	
		6.0				16	28		35		43	
t_{PLZ} t_{PHZ}	High Impedance Output Disable Time	2.0	50	R_L = 1 KΩ		34	125		155		190	ns
		4.5				17	25		31		38	
		6.0				15	21		26		32	
f_{MAX}	Maximum Clock Frequency	2.0	50		6.2	18		5		4.2		MHz
		4.5			31	75		25		21		
		6.0			37	90		30		25		
$t_{W(L)}$ $t_{W(H)}$	Minimum Pulse Width (CLOCK)	2.0	50			15	75		95		110	ns
		4.5				6	15		19		22	
		6.0				6	13		16		19	
t_s	Minimum Set-up Time	2.0	50			25	75		95		110	ns
		4.5				6	15		19		22	
		6.0				4	13		16		19	
t_h	Minimum Hold Time	2.0	50				0		0		0	ns
		4.5					0		0		0	
		6.0					0		0		0	

CAPACITIVE CHARACTERISTICS

Symbol	Parameter	Test Condition			Value							Unit
		V_{CC} (V)			T_A = 25°C			-40 to 85°C		-55 to 125°C		
					Min.	Typ.	Max.	Min.	Max.	Min.	Max.	
C_{IN}	Input Capacitance					5	10		10		10	pF
C_{OUT}	Output Capacitance					10						pF
C_{PD}	Power Dissipation Capacitance (note 1)					54						pF

1) C_{PD} is defined as the value of the IC's internal equivalent capacitance which is calculated from the operating current consumption without load. (Refer to Test Circuit). Average operating current can be obtained by the following equation. $I_{CC(opr)} = C_{PD} \times V_{CC} \times f_{IN} + I_{CC}$

Obsolete Product(s) - Obsolete Product(s)

Distributor of STMicroelectronics: Excellent Integrated System Limited
Datasheet of M74HC574B1R - IC D-TYPE POS TRG SNGL 20DIP
Contact us: sales@integrated-circuit.com Website: www.integrated-circuit.com

TEST CIRCUIT

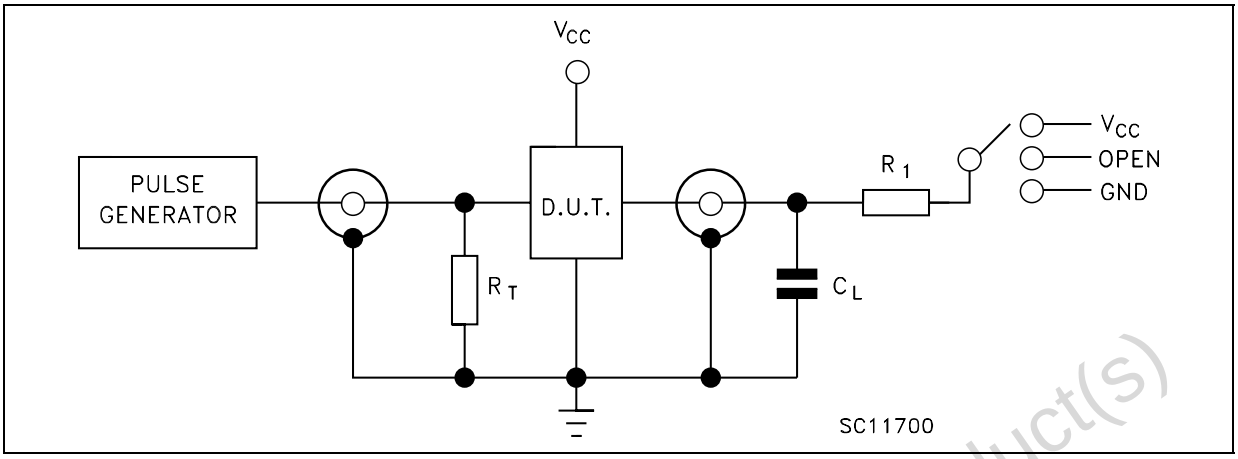

TEST	SWITCH
t_{PLH}, t_{PHL}	Open
t_{PZL}, t_{PLZ}	V_{CC}
t_{PZH}, t_{PHZ}	GND

C_L = 50pF/150pF or equivalent (includes jig and probe capacitance)
R_1 = 1KΩ or equivalent
R_T = Z_{OUT} of pulse generator (typically 50Ω)

WAVEFORM 1: CK TO Qn PROPAGATION DELAYS, CK MAXIMUM FREQUENCY, Dn TO CK SETUP AND HOLD TIMES (f=1MHz; 50% duty cycle)

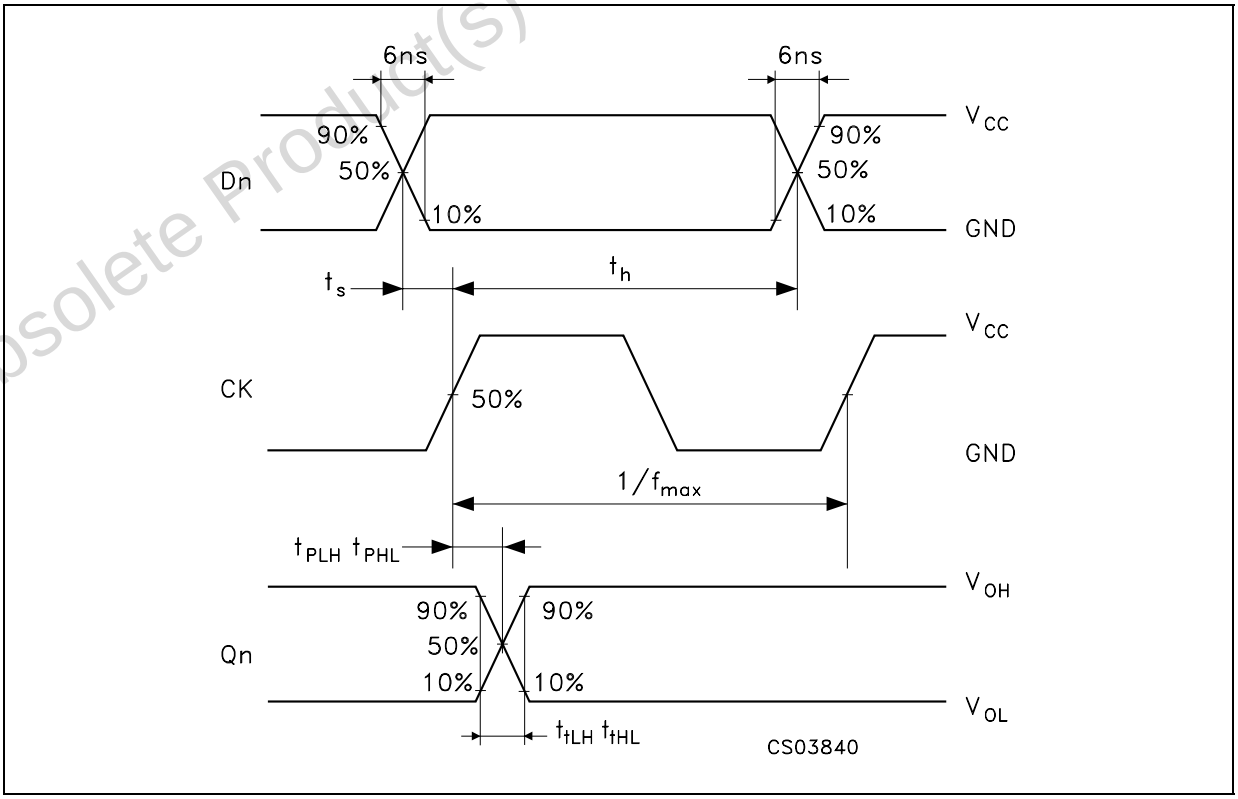

Obsolete Product(s) - Obsolete Product(s)

Distributor of STMicroelectronics: Excellent Integrated System Limited
Datasheet of M74HC574B1R - IC D-TYPE POS TRG SNGL 20DIP
Contact us: sales@integrated-circuit.com Website: www.integrated-circuit.com

WAVEFORM 2: OUTPUT ENABLE AND DISABLE TIMES (f=1MHz; 50% duty cycle)

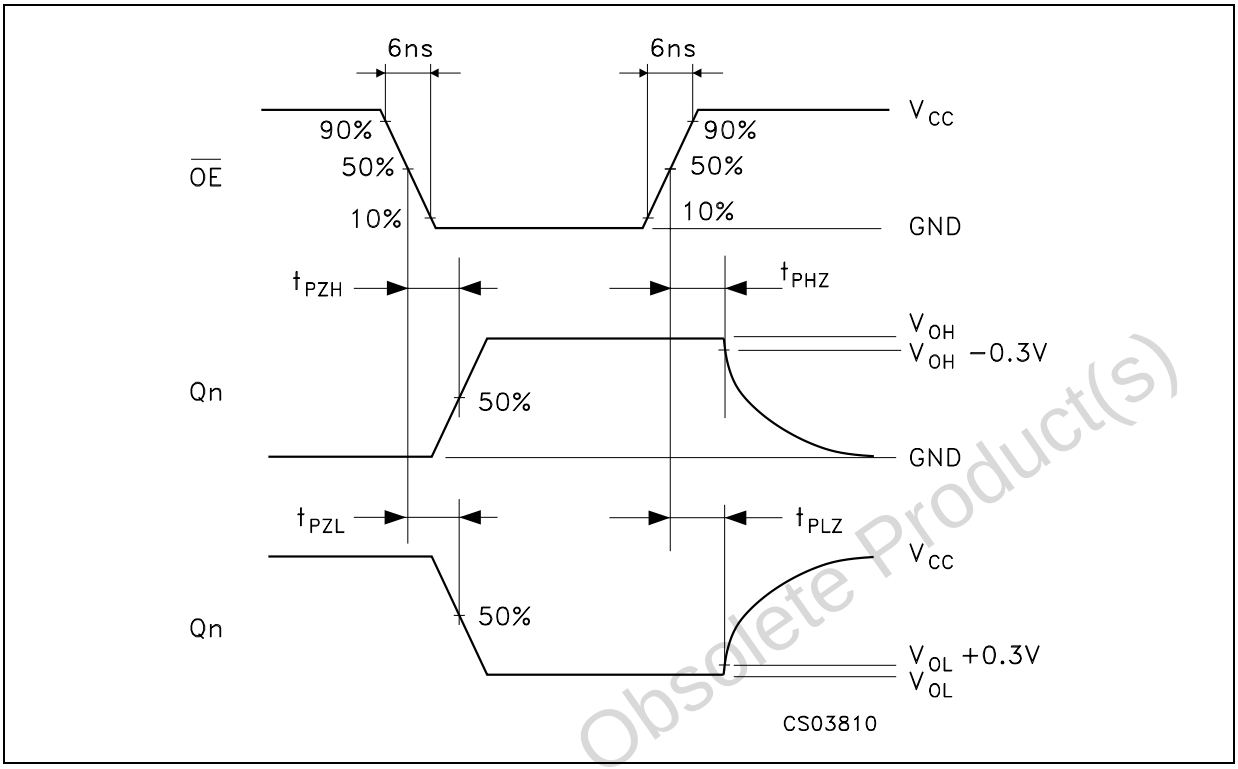

WAVEFORM 3: CK MINIMUM PULSE WIDTH (f=1MHz; 50% duty cycle)

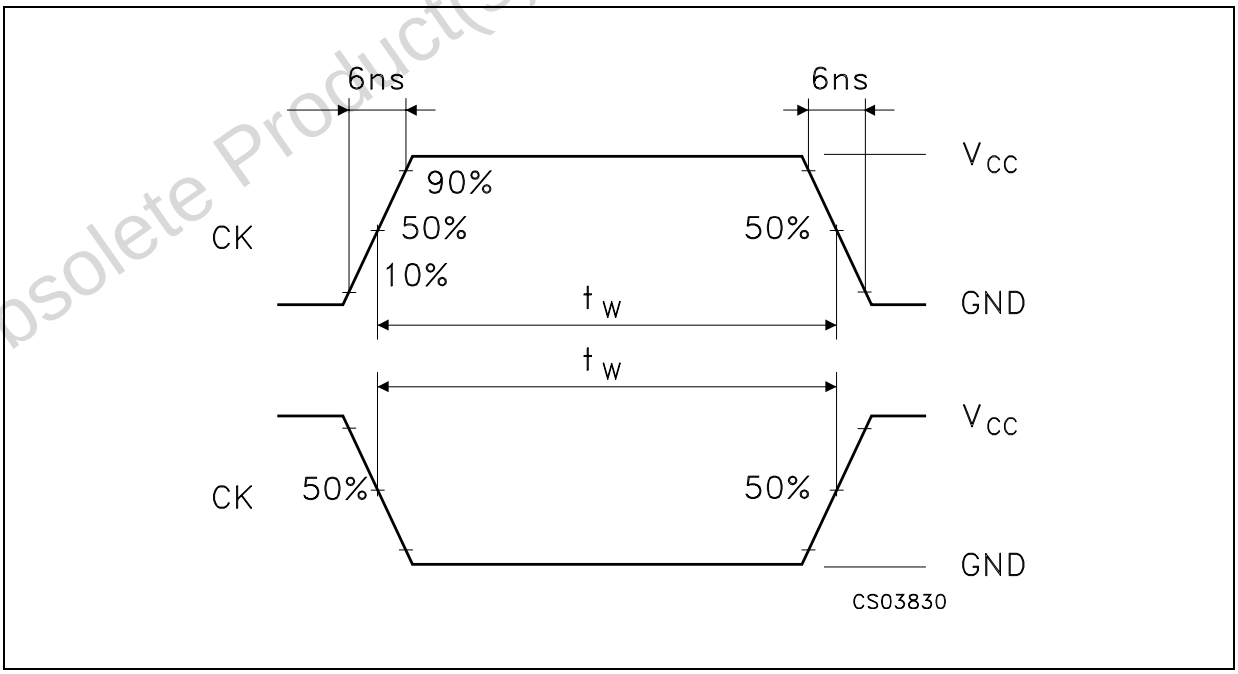

Obsolete Product(s) - Obsolete Product(s)

Distributor of STMicroelectronics: Excellent Integrated System Limited
Datasheet of M74HC574B1R - IC D-TYPE POS TRG SNGL 20DIP
Contact us: sales@integrated-circuit.com Website: www.integrated-circuit.com

Plastic DIP-20 (0.25) MECHANICAL DATA

DIM.	mm.			inch		
	MIN.	TYP	MAX.	MIN.	TYP.	MAX.
a1	0.254			0.010		
B	1.39		1.65	0.055		0.065
b		0.45			0.018	
b1		0.25			0.010	
D			25.4			1.000
E		8.5			0.335	
e		2.54			0.100	
e3		22.86			0.900	
F			7.1			0.280
I			3.93			0.155
L		3.3			0.130	
Z			1.34			0.053

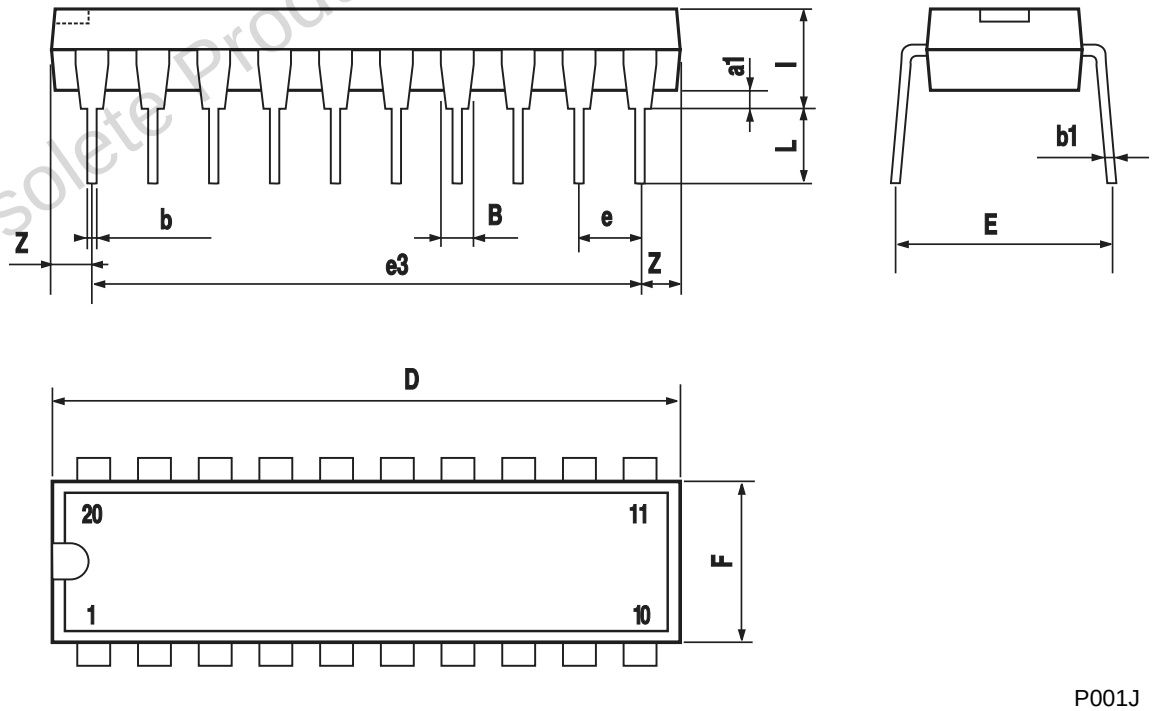

P001J

Obsolete Product(s) - Obsolete Product(s)

Distributor of STMicroelectronics: Excellent Integrated System Limited
Datasheet of M74HC574B1R - IC D-TYPE POS TRG SNGL 20DIP
Contact us: sales@integrated-circuit.com Website: www.integrated-circuit.com

SO-20 MECHANICAL DATA

DIM.	mm.			inch		
	MIN.	TYP	MAX.	MIN.	TYP.	MAX.
A			2.65			0.104
a1	0.1		0.2	0.004		0.008
a2			2.45			0.096
b	0.35		0.49	0.014		0.019
b1	0.23		0.32	0.009		0.012
C		0.5			0.020	
c1	45° (typ.)					
D	12.60		13.00	0.496		0.512
E	10.00		10.65	0.393		0.419
e		1.27			0.050	
e3		11.43			0.450	
F	7.40		7.60	0.291		0.300
L	0.50		1.27	0.020		0.050
M			0.75			0.029
S	8° (max.)					

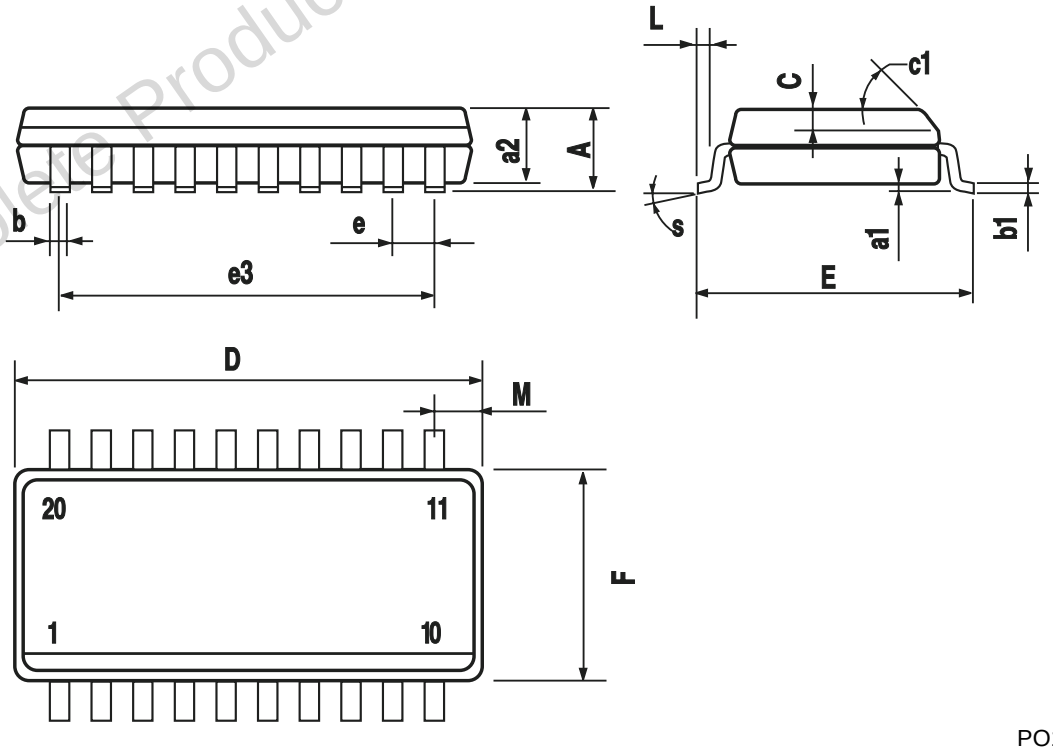

PO13L

Obsolete Product(s) - Obsolete Product(s)

Distributor of STMicroelectronics: Excellent Integrated System Limited
Datasheet of M74HC574B1R - IC D-TYPE POS TRG SNGL 20DIP
Contact us: sales@integrated-circuit.com Website: www.integrated-circuit.com

TSSOP20 MECHANICAL DATA

DIM.	mm.			inch		
	MIN.	TYP	MAX.	MIN.	TYP.	MAX.
A			1.2			0.047
A1	0.05		0.15	0.002	0.004	0.006
A2	0.8	1	1.05	0.031	0.039	0.041
b	0.19		0.30	0.007		0.012
c	0.09		0.20	0.004		0.0089
D	6.4	6.5	6.6	0.252	0.256	0.260
E	6.2	6.4	6.6	0.244	0.252	0.260
E1	4.3	4.4	4.48	0.169	0.173	0.176
e		0.65 BSC			0.0256 BSC	
K	0°		8°	0°		8°
L	0.45	0.60	0.75	0.018	0.024	0.030

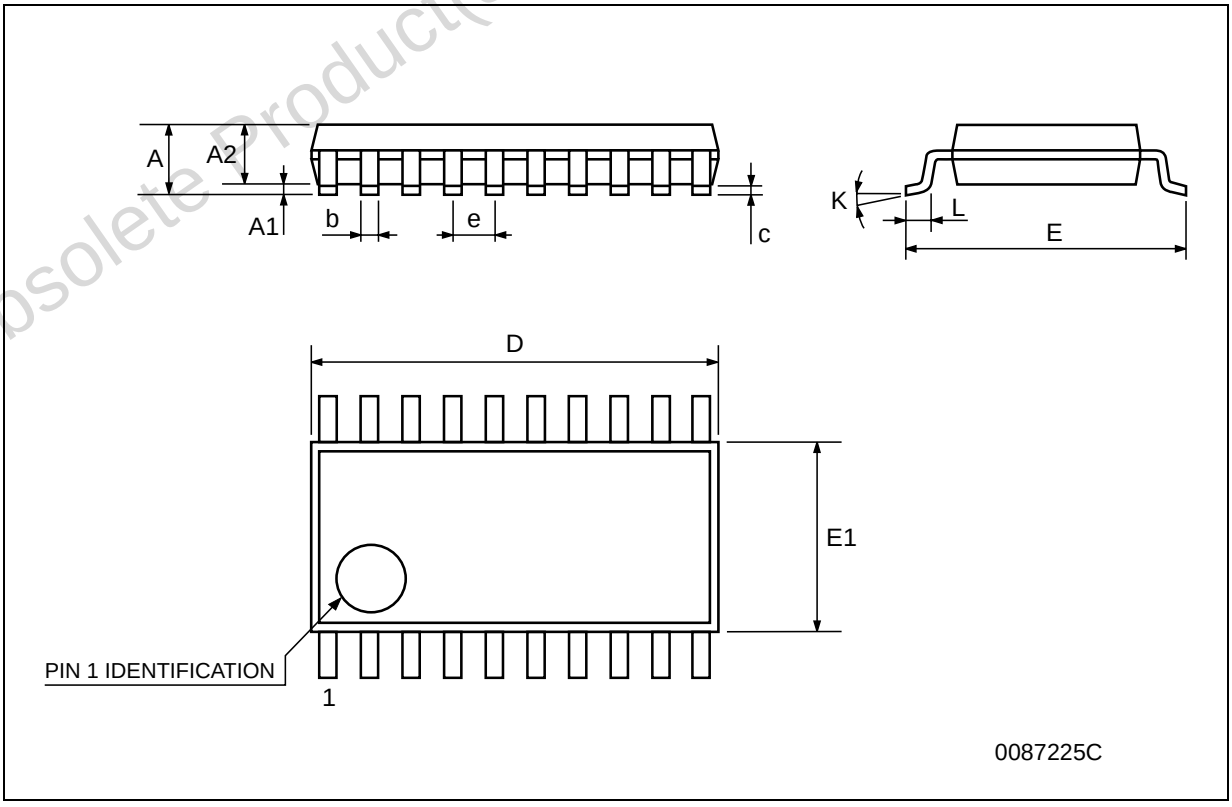

Obsolete Product(s) - Obsolete Product(s)

Distributor of STMicroelectronics: Excellent Integrated System Limited
Datasheet of M74HC574B1R - IC D-TYPE POS TRG SNGL 20DIP
Contact us: sales@integrated-circuit.com Website: www.integrated-circuit.com

Obsolete Product(s) - Obsolete Product(s)

Information furnished is believed to be accurate and reliable. However, STMicroelectronics assumes no responsibility for the consequences of use of such information nor for any infringement of patents or other rights of third parties which may result from its use. No license is granted by implication or otherwise under any patent or patent rights of STMicroelectronics. Specifications mentioned in this publication are subject to change without notice. This publication supersedes and replaces all information previously supplied. STMicroelectronics products are not authorized for use as critical components in life support devices or systems without express written approval of STMicroelectronics.

© The ST logo is a registered trademark of STMicroelectronics

© 2000 STMicroelectronics - Printed in Italy - All Rights Reserved
STMicroelectronics GROUP OF COMPANIES
Australia - Brazil - China - Finland - France - Germany - Hong Kong - India - Italy - Japan - Malaysia - Malta - Morocco
Singapore - Spain - Sweden - Switzerland - United Kingdom
© http://www.st.com