Excellent Integrated System Limited

Stocking Distributor

Click to view price, real time Inventory, Delivery & Lifecycle Information:

Molex Connector Corporation
03-06-1056

For any questions, you can email us directly:
sales@integrated-circuit.com

Distributor of Molex Connector Corporation: Excellent Integrated System Limited
Datasheet of 03-06-1056 - CONN RECEPTACLE 5POS .062
Contact us: sales@integrated-circuit.com Website: www.integrated-circuit.com

RECEPTACLE

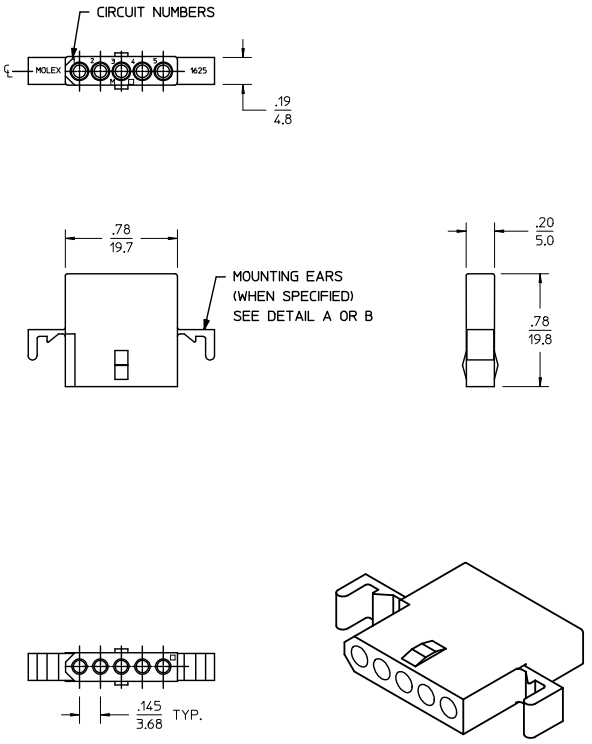

RECEPTACLE HOUSING

SHOWN WITH STANDARD EARS

PLUG

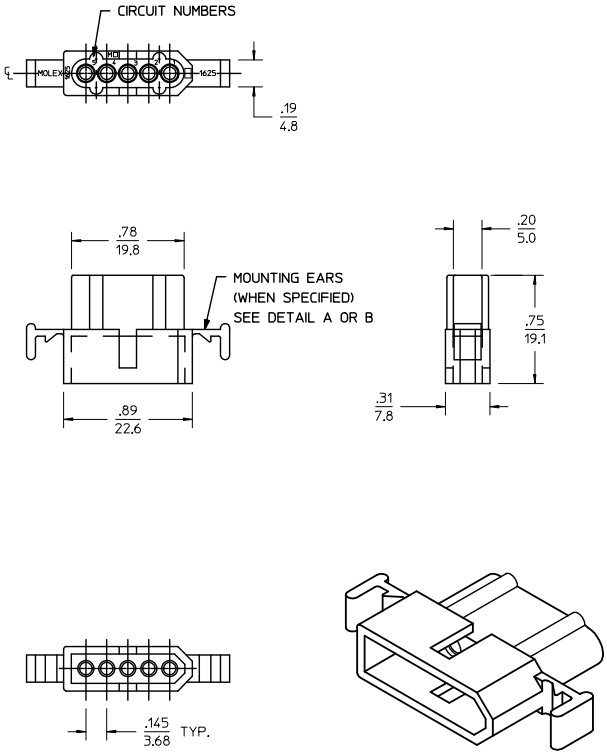

PLUG HOUSING

SHOWN WITH STANDARD EARS

PK SPEC EC NO: UCP2015-0466 DRWN: JDFOX 2014/08/06 CH'KD: MKIPPER 2014/08/06 APPR: FSMITH 2014/08/14 F1	DESCRIPTION	REV	QUALITY SYMBOLS	GENERAL TOLERANCES (UNLESS SPECIFIED) mm / INCH	DIMENSION STYLE IN/MM	SCALE 2:1	DESIGN UNITS INCH	THIRD ANGLE PROJECTION	
				4 PLACES ±--- / ±---	DRAWN BY JDFOX DATE 2014/08/06	TITLE .062/(1.57) HOUSINGS PLUG & RECEPTACLE 5 CIRCUIT .145/(3.68)			
				3 PLACES ±--- / ±.010	CHECKED BY MKIPPER DATE 2014/08/06				
				2 PLACES ±0.25 / ±.01	APPROVED BY FSMITH DATE 2014/08/14	molex			
				1 PLACE ±0.35 / ±---					
				0 PLACE ±--- / ±---	MATERIAL NO. SEE CHART	DOCUMENT NO. SD-1625-5*		SHEET NO. 1 OF 2	
				ANGULAR ±1/2°					
				DRAFT WHERE APPLICABLE MUST REMAIN WITHIN DIMENSIONS	SIZE C	THIS DRAWING CONTAINS INFORMATION THAT IS PROPRIETARY TO MOLEX INCORPORATED AND SHOULD NOT BE USED WITHOUT WRITTEN PERMISSION			

tb_frame_C_P_AM_T
Rev. G 2012/01/11

Distributor of Molex Connector Corporation: Excellent Integrated System Limited
Datasheet of 03-06-1056 - CONN RECEPTACLE 5POS .062
Contact us: sales@integrated-circuit.com Website: www.integrated-circuit.com

PLUG		RECEPTACLE	
PART NO.	ENG. NO.	PART NO.	ENG. NO.
03-06-2054	1625-5P	03-06-1055	1625-5R
03-06-2055	1625-5P1	03-06-1056	1625-5R1
03-06-7054	1625-5PBK	03-06-6055	1625-5RBK
03-06-7055	1625-5P1BK	NOT TOOLED	1625-5R2

LEGEND:

1625-5****

CIRCUIT SIZE

P = PLUG
R = RECEPTACLE

BLANK = WITH STANDARD EARS
1 = WITHOUT EARS
2 = WITH PREBENT EARS

COLOR:
BLANK = NATURAL COLOR
AM = AMBER BK = BLACK BU = BLUE
BN = BROWN GY = GRAY GN = GREEN
OR = ORANGE RD = RED YW = YELLOW

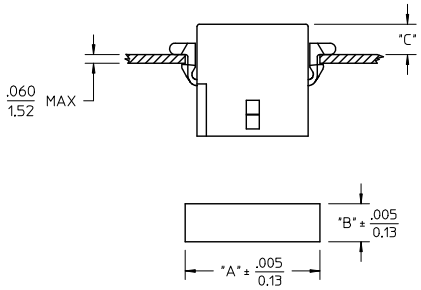

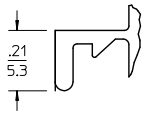

DETAIL A

.062/(1.57) STANDARD MOUNTING EAR
(SCALE 4:1)

RECOMMENDED PANEL OPENING

HOUSING	DIM. "A"	DIM. "B"	"C" PREBENT EAR	"C" STANDARD EAR
PLUG	1.044/(26.52)	.318/(8.08)	.19/(4.8)	.18/(4.6)
RECEPT.	.940/(23.88)	.265/(6.73)	.21/(5.3)	.20/(5.1)

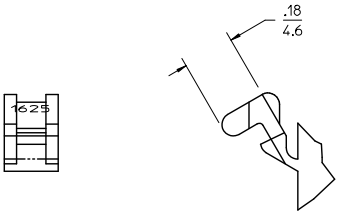

DETAIL B

.062/(1.57)PREBENT MOUNTING EAR
(SCALE 4:1)

NOTES:
1. MATERIAL: NYLON 6/6, UL94V-2, COLOR: SEE LEGEND.
2. FINISH: NONE.
3. MOLEX PRODUCT SPEC PS-02-06 APPLIES.
4. PACKAGING SPECIFICATION: PK-1625-003.
5. ACCEPTS MOLEX .062 SERIES TERMINALS.
6. PARTS CONFORM TO CLASS B REQUIREMENTS OF COSMETIC SPECIFICATION PS-45499-002.

SEE SHEET 1
EC NO: UCP2015-0466 2014/08/06
DRWN: JDFOX 2014/08/06
CHKD: MKIPPER 2014/08/06
APPR: FSMITH 2014/08/14
DESCRIPTION
REV
F1

QUALITY SYMBOLS
=0
=0
=0

GENERAL TOLERANCES (UNLESS SPECIFIED)

	mm	INCH
4 PLACES	± ---	± ---
3 PLACES	± ---	± .010
2 PLACES	± 0.25	± .01
1 PLACE	± 0.35	± ---
0 PLACE	± ---	± ---
ANGULAR ±1/2°		

DRAFT WHERE APPLICABLE MUST REMAIN WITHIN DIMENSIONS

DIMENSION STYLE: IN/MM
SCALE: 2:1
DESIGN UNITS: INCH
THIRD ANGLE PROJECTION

DRAWN BY: JDFOX DATE: 2014/08/06
CHECKED BY: MKIPPER DATE: 2014/08/06
APPROVED BY: FSMITH DATE: 2014/08/14

TITLE: .062/(1.57) HOUSINGS PLUG & RECEPTACLE 5 CIRCUIT .145/(3.68)

molex

MATERIAL NO.: SEE CHART
DOCUMENT NO.: SD-1625-5*
SHEET NO.: 2 OF 2
SIZE: C

THIS DRAWING CONTAINS INFORMATION THAT IS PROPRIETARY TO MOLEX INCORPORATED AND SHOULD NOT BE USED WITHOUT WRITTEN PERMISSION

tb_frame_C_P_AM_T
Rev. G 2012/01/11