Excellent Integrated System Limited

Stocking Distributor

Click to view price, real time Inventory, Delivery & Lifecycle Information:

TE Connectivity AMP Connectors
1445691-1

For any questions, you can email us directly:
sales@integrated-circuit.com

THIS DRAWING IS UNPUBLISHED. RELEASED FOR PUBLICATION 20
© COPYRIGHT 20 BY TYCO ELECTRONICS CORPORATION. ALL RIGHTS RESERVED.

LOC	DIST
-	-

REVISIONS

P	LTR	DESCRIPTION	DATE	DWN	APVD
	7	REVISED	13MAY03	BH	KD
	8	ADDED 'B', A REF. 30° WAS 10°	5-28-03	GD	KD
	9	REVISED	3-12-04	GD	KD
	10	ADDED P/NS.NOTE 1 AND HOUSING COLOR.	4-14-04		

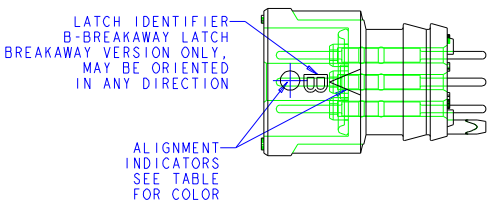

THIS PRODUCT HAS NOT COMPLETED VALIDATION TESTING

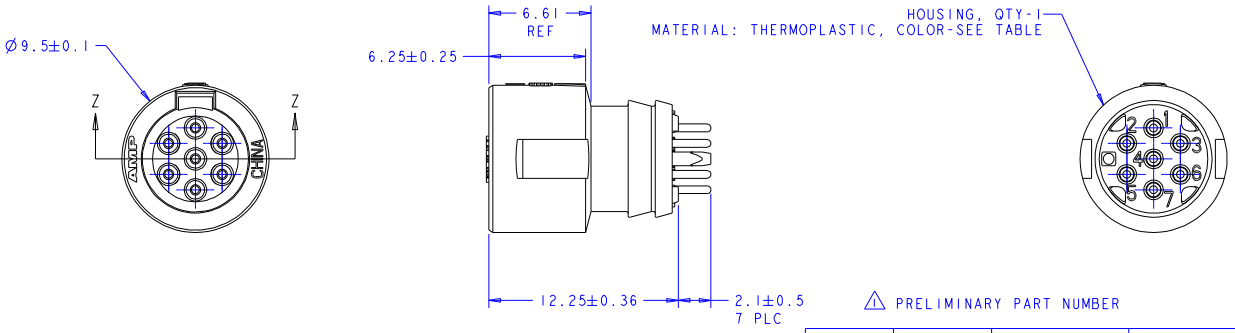

⚠ PRELIMINARY PART NUMBER

HOUSING COLOR	INDICATOR COLOR	CONTACT CIRCUITS	LATCH	A REF	PART NUMBER
WHITE	WHITE	1,7	BREAKAWAY	30°	⚠1-1445691-2
BLACK	WHITE	1,7	POSITIVE	0°	⚠1-1445691-1
WHITE	WHITE	2,3,7	BREAKAWAY	30°	⚠1-1445691-0
BLACK	WHITE	2,3,7	POSITIVE	0°	⚠1445691-09
WHITE	WHITE	2,3,5,6	BREAKAWAY	30°	⚠1445691-08
BLACK	WHITE	2,3,5,6	POSITIVE	0°	⚠1445691-07
WHITE	WHITE	2,3,4,5,6	BREAKAWAY	30°	⚠1445691-06
BLACK	WHITE	2,3,4,5,6	POSITIVE	0°	⚠1445691-05
WHITE	WHITE	1,2,3,5,6,7	BREAKAWAY	30°	⚠1445691-04
BLACK	WHITE	1,2,3,5,6,7	POSITIVE	0°	⚠1445691-03
WHITE	WHITE	ALL	BREAKAWAY	30°	⚠1445691-02
BLACK	WHITE	ALL	POSITIVE	0°	1445691-01

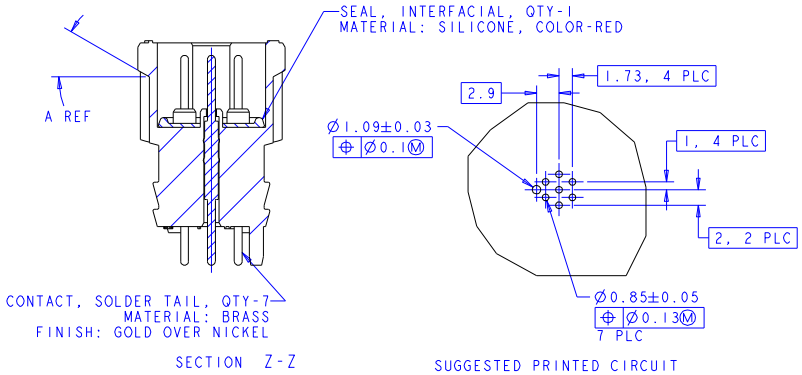

DWN S SHANE WILES 20JUL2001		Tyco Electronics Harrisburg, PA 17105-3608	
CHK G DOUTY 20JUL2001			
APVD -		NAME ASSEMBLY, RECEPTACLE, FREE HANGING, PIN CONTACT, SOLDER POST, 7 POSITION, MICRO CPC	
DIMENSIONS: mm	TOLERANCES UNLESS OTHERWISE SPECIFIED: 0 PLC ±- 1 PLC ±- 2 PLC ±0.13 3 PLC ±- 4 PLC ±- ANGLES ±-	PRODUCT SPEC -	
		APPLICATION SPEC -	
MATERIAL SEE NOTE	FINISH SEE NOTE	WEIGHT -	SIZE A2 / CAGE CODE 00779 / DRAWING NO C-1445691 / RESTRICTED TO -
		CUSTOMER DRAWING	SCALE 6:1 / SHEET 1 OF 1 / REV 10