Excellent Integrated System Limited

Stocking Distributor

Click to view price, real time Inventory, Delivery & Lifecycle Information:

Abracon Corporation
AB-10.000MHZ-B2

For any questions, you can email us directly:
sales@integrated-circuit.com

HC49/U CRYSTAL

AB

RoHS/RoHS II Compliant

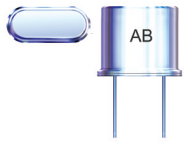

11.5 x 5.0 x 13.46mm

Moisture Sensitivity Level (MSL) – This product is not Moisture Sensitive - MSL = 1

FEATURES:

- High precision availability
- Resistance welded
- Ideal for large pullability application
- Wide frequency range

APPLICATIONS:

- CPU, Memory
- Computer, printer
- Data communication (1MHz)
- Data input - output machine (1MHz)

STANDARD SPECIFICATIONS:

Parameters	Minimum	Typical	Maximum	Units	Notes
Frequency Range	1.8432		160.000	MHz	
Operation Mode	Fundamental				1.8432MHz – 24.000MHz
	3rd Overtone				24.01MHz – 66.00MHz
	5th Overtone				66.01MHz – 122.00MHz
	7th Overtone				122.01MHz – 160.00MHz
Operating Temperature	0		+70	ºC	See options
Storage Temperature	-55		+125	ºC	
Frequency Tolerance @+25°C	-50		+50	ppm	See options
Frequency Stability over the operating temperature (ref. to +25°C)	-100		+100	ppm	See options
Equivalent series resistance (R1)	See table 1 below			Ω	
Shunt capacitance (C0)			7	pF	
Load capacitance (CL)		18		pF	See options
Drive Level		100	1000	µW	
Aging@25°C±3°C			±5	ppm	First year
Insulation Resistance	500			M Ω	@100Vdc±15V
Drive level dependency (DLD), minimum 7 points tested: from 1µW to 500µW.	Change in frequency (Maximum - Minimum) over DLD range < ±10ppm; Change in ESR (Maximum - Minimum) over DLD range < 25% of Max ESR value; Maximum ESR over DLD range < Max ESR value.				

Table 1

FREQUENCY (MHz)	Operation Mode	ESR (Ω) max
1.8432-1.999	HC49/U Fundamental	750
2.000-2.399		550
2.400-2.999		350
3.000-3.699		200
3.700-4.199		100
4.200-4.899		70
4.900-5.999		50
6.000-7.999		40
8.000-9.999		35
10.000-12.499		30
12.50-50.00		25
24.00-66.00	HC49/U (3rd OT)	40
66.01-122.00	HC49/U (5th OT)	80
122.01-160.00	HC49/U (7th OT)	120

30332 Esperanza, Rancho Santa Margarita, California 92688
tel 949-546-8000 | fax 949-546-8001 | www.abracon.com

HC49/U CRYSTAL

AB

RoHS/RoHS II Compliant

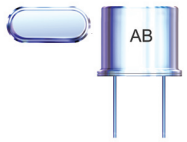

11.5 x 5.0 x 13.46mm

OPTIONS AND PART IDENTIFICATION:

(Left blank if standard)

AB - ☐ MHz - ☐ - ☐ - ☐☐☐ - ☐ - ☐ - ☐ - ☐

Frequency in MHz
Please specify the frequency in xx.xxxxMHz.
e.g. 14.3181MHz

Load Capacitance (pF)
Please specify CL (Minimum 10pF) in pF or S for series

Custom ESR if other than standard
R☐
☐: Specify a value in Ω (e.g.: R40)

Operating Temp.

A: -10°C ~ +60°C
B: -20°C ~ +70°C
C: -30°C ~ +70°C
N: -30°C ~ +85°C
D: -40°C ~ +85°C

Freq. Tolerance

1: ± 10 ppm
7: ± 15 ppm
2: ± 20 ppm
3: ± 25 ppm
4: ± 30 ppm

Freq. Stability

Options for AT-Cut only*
U**: ± 10 ppm
G: ± 15 ppm
X: ± 20 ppm
W: ± 25 ppm
Y: ± 30 ppm
H: ± 35 ppm
Z: ± 50 ppm

NOTE:
*:Frequency Stability ±100 ppm maxat -10 to +60C only for BT cut.
**: -10 to +60C only.
***: Quality factor must be accompanied by a k value

Operation Mode

F	Fund. AT > 24MHz
FB	Fund. BT>24MHz
O	3rd OT>66MHz

Value Added

I	Insulator Tab
V	Vinyl Sleeve
QXX	Trimmed leads See Table 2
MJ	Metal jacket

Quality Factor***

QXXXk	Minimum Value

Packaging
T: Tape & Reel

Table 2

CODES	TRIMMED L in(mm)
Q45	0.45 (11.43)
Q40	0.40 (10.16)
Q35	0.35 (8.89)
Q30	0.30 (7.62)
Q25	0.25 (6.35)
Q20	0.20 (5.08)
Q15	0.15 (3.81)
Q10	0.10 (2.54)
Q115	0.115 (2.92)

NOTE: Use appropriate code numbers for other trimmed lengths not listed.
(e.g. Q14 for 0.14 inch (3.55 mm))

30332 Esperanza, Rancho Santa Margarita, California 92688
tel 949-546-8000 | fax 949-546-8001 | www.abracon.com

HC49/U CRYSTAL

AB

RoHS/RoHS II Compliant

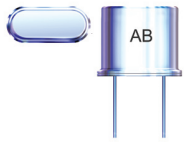

11.5 x 5.0 x 13.46mm

OUTLINE DRAWING:

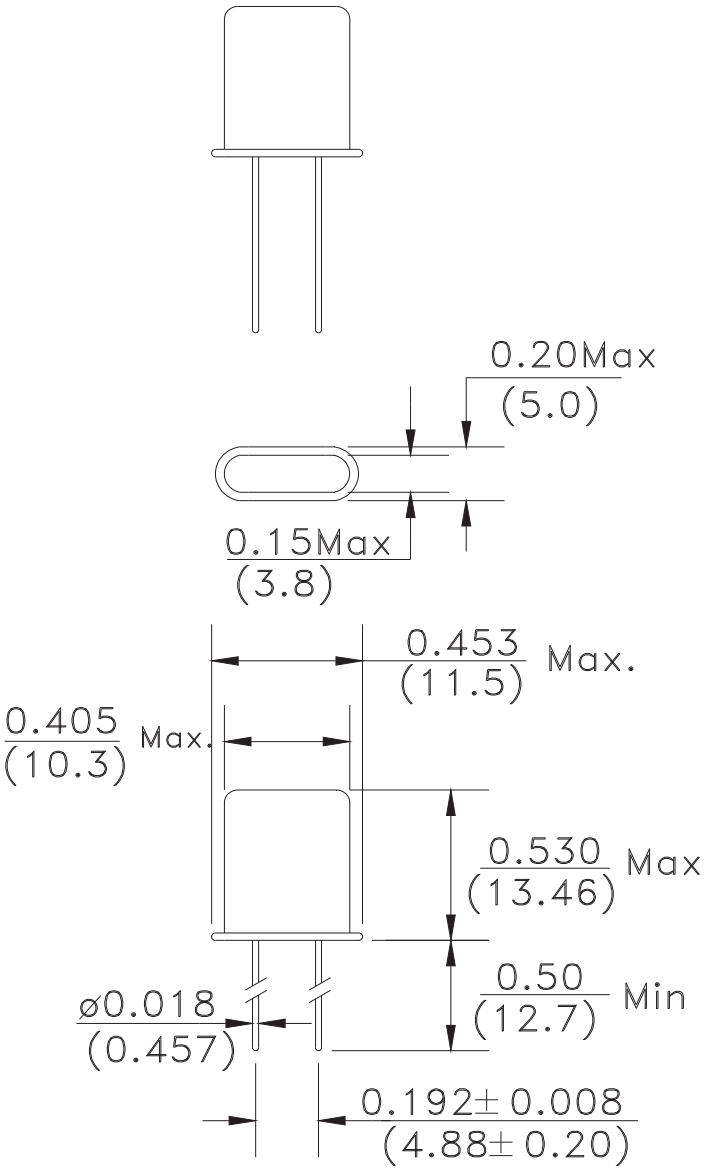

Insulator Tab
For Option I

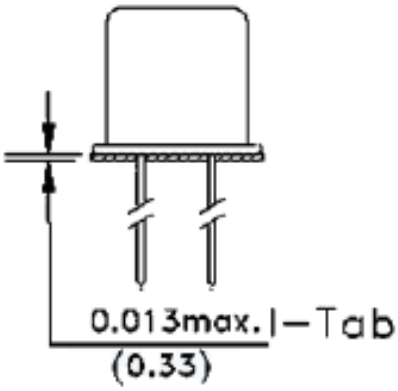

Vinyl Sleeve

For Option V

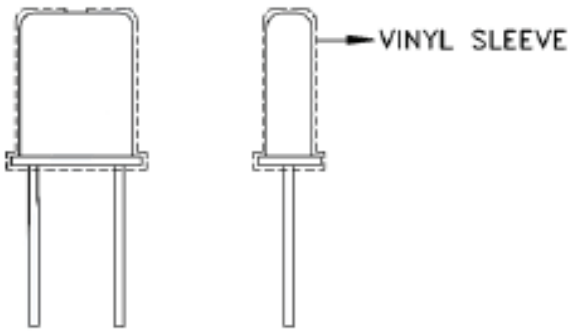

Dimensions: inch (mm)

30332 Esperanza, Rancho Santa Margarita, California 92688
tel 949-546-8000 | fax 949-546-8001 | www.abracon.com

HC49/U CRYSTAL

AB

RoHS/RoHS II Compliant

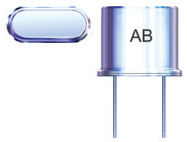

11.5 x 5.0 x 13.46mm

OUTLINE DIMENSION CONTD...

Metal Jacket Formed Leads

For Option MJ

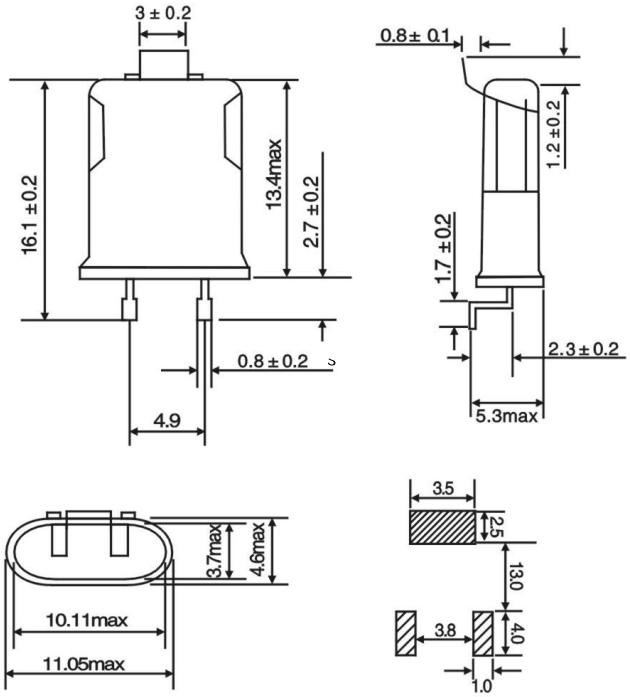

Dimensions: mm

TAPE & REEL:

T: 1,000 pcs/reel

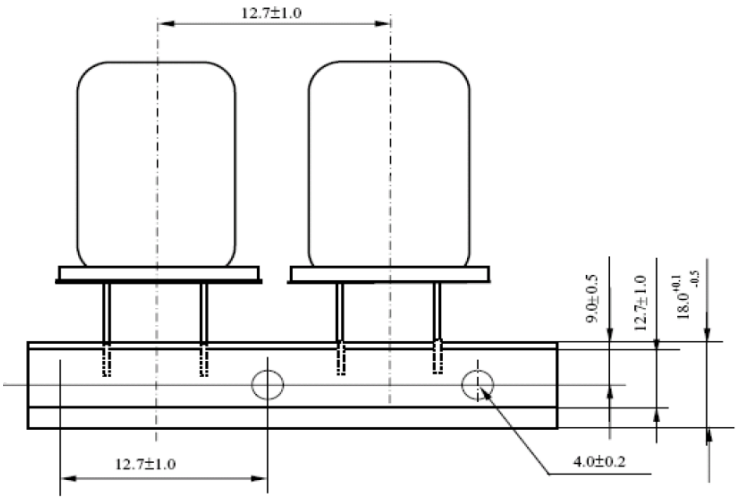

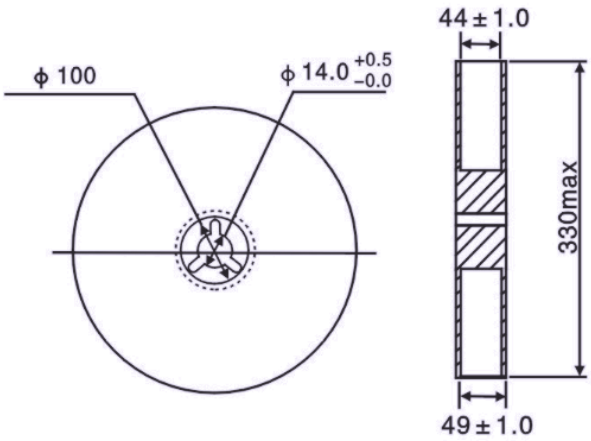

Dimensions: mm

ATTENTION: Abracon Corporation's products are COTS – Commercial-Off-The-Shelf products; suitable for Commercial, Industrial and, where designated, Automotive Applications. Abracon's products are not specifically designed for Military, Aviation, Aerospace, Life-dependant Medical applications or any application requiring high reliability where component failure could result in loss of life and/or property. For applications requiring high reliability and/or presenting an extreme operating environment, written consent and authorization from Abracon Corporation is required. Please contact Abracon Corporation for more information.

30332 Esperanza, Rancho Santa Margarita, California 92688
tel 949-546-8000 | fax 949-546-8001 | www.abracon.com