Excellent Integrated System Limited

Stocking Distributor

Click to view price, real time Inventory, Delivery & Lifecycle Information:

BUD Industries, Inc.
EX-4500

For any questions, you can email us directly:
sales@integrated-circuit.com

PART NAME	EXTRUDED ALUMINUM BOX	PART No.	EX-4500 & EX-4501 & EX-4502

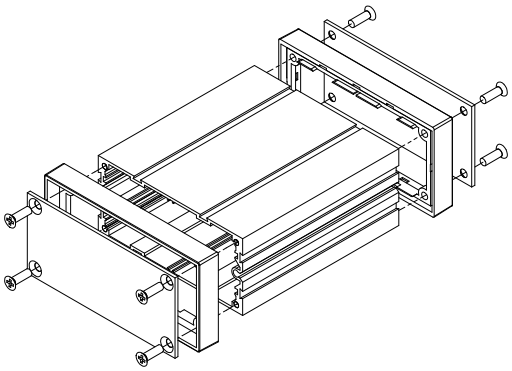

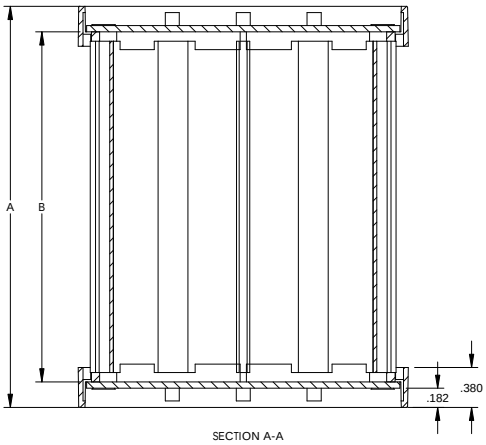

SECTION A-A

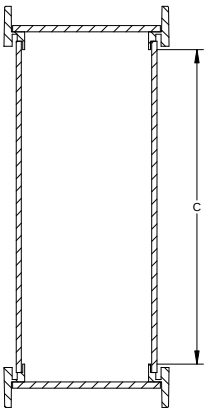

SECTION B-B

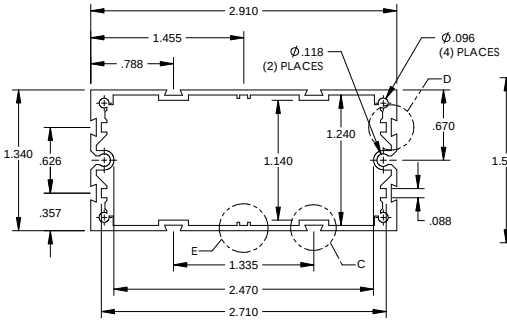

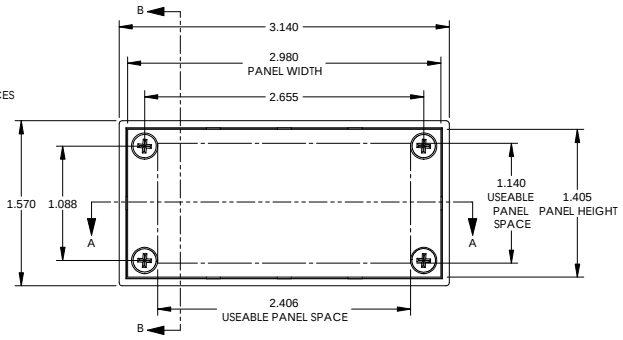

MATERIAL:
BODY - ALUMINUM
BEZEL - UL94V-0 ABS
PANEL - .060 THK. ALUMINUM

FINISH:
BODY - SILVER COATING
BEZEL - BLACK
PANEL - NATURAL

EIGHT (8) M3 x 10mm FLAT HEAD SCREWS SUPPLIED TO ATTACH END PANELS AND BEZELS TO BODY (ALTERNATE SCREW #4 x 5/8 FLAT HEAD THREAD CUTTING SCREWS CAN BE SUBSTITUTED)
RECOMMEND INSERTION TORQUE 6-8 in-lbs.

ALL DIMENSIONS HAVE ±.015 TOLERANCE UNLESS OTHERWISE SPECIFIED

	EXTERNAL	INTERNAL CLEARANCE	
PART No.	A	B	C
EX-4500	3.81	3.33	2.99
EX-4501	5.38	4.90	4.56
EX-4502	6.96	6.48	6.14

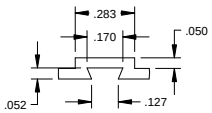

DETAIL C

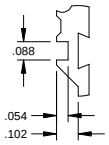

DETAIL D

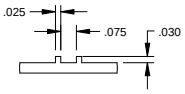

DETAIL E

REV: 8/3/07