Excellent Integrated System Limited

Stocking Distributor

Click to view price, real time Inventory, Delivery & Lifecycle Information:

STMicroelectronics
STF817A

For any questions, you can email us directly:
sales@integrated-circuit.com

STN817A
STF817A

PNP MEDIUM POWER TRANSISTOR

General features

- SURFACE-MOUNTING DEVICES IN MEDIUM POWER SOT-223 AND SOT-89 PACKAGES
- AVAILABLE IN TAPE & REEL PACKING

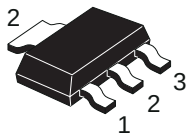

SOT-223

SOT-89

Description

The STF817A - STN817A are PNP transistor manufactured using Planar Technology resulting in rugged high performance devices.

Applications

- VOLTAGE REGULATION
- RELAY DRIVER
- GENERIC SWITCH

Internal schematic diagram

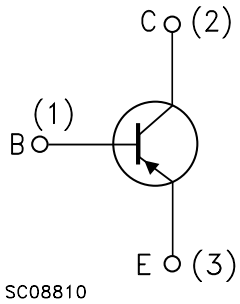

Order codes

Sales Type	Marking	Package	Packaging
STF817A	817A	SOT-89	TAPE & REEL
STN817A	N817A	SOT-223	TAPE & REEL

Obsolete Product(s) - Obsolete Product(s)

Distributor of STMicroelectronics: Excellent Integrated System Limited
Datasheet of STF817A - TRANS PNP 80V 1.5A SOT89
Contact us: sales@integrated-circuit.com Website: www.integrated-circuit.com

1 Electrical ratings

Table 1. Absolute maximum ratings

Symbol	Parameter	Value		Unit
		SOT-223	SOT-89	
V_{CBO}	Collector-Base Voltage (I_E=0)	-80		V
V_{CEO}	Collector-Emitter Voltage (I_E=0)	-80		V
V_{EBO}	Emitter-Base Voltage (I_C=0)	-5		V
I_C	Collector Current	-1.5		A
I_{CM}	Collector Peaak Current (tp<5ms)	-2		A
I_B	Base Current	-0.3		A
I_{BM}	Base Peak Current (tp<5ms)	-0.6		A
P_{TOT}	Total Dissipation at T_{amb} = 25°C	1.6	1.4	W
T_j T_{stg}	Operating Junction Temperature Storage Temperature	-65 to 150		°C

Table 2. Thermal data

		SOT-223	SOT-89	Unit
Rthj-amb *Note* 1	Thermal Resistance Junction-amb Max	78	89	°C/W

Obsolete Product(s) - Obsolete Product(s)

Distributor of STMicroelectronics: Excellent Integrated System Limited
Datasheet of STF817A - TRANS PNP 80V 1.5A SOT89
Contact us: sales@integrated-circuit.com Website: www.integrated-circuit.com

2 Electrical characteristics

(T_{CASE} = 25 °C unless otherwise specified)

Table 3. On/off states

Symbol	Parameter	Test Conditions	Min.	Typ.	Max.	Unit
I_{ECS}	Collector Cut-off Current (V_{BE}=0)	V_{CE} = -80 V			-500	µA
I_{CEO}	Collector Cut-off Current (I_B=0)	V_{CE} = -80 V			-1	mA
I_{EBO}	Emitter Cut-off Current (I_C = 0)	V_{EB} = -5V			-100	µA
$V_{CEO(sus)}$ *Note* 2	Collector-Emitter Sustaining Voltage (I_B = 0)	I_C=-10mA	-80			V
$V_{CE(sat)}$ *Note* 2	Collector-Emitter Saturation Volatge	I_C= -100 mA, I_B= -10m A I_C= -1 A, I_B= -100m A			-0.25 -0.5	V V
$V_{BE(sat)}$ *Note* 2	Base-Emitter Saturation Volatge	I_C= -100 mA, I_B= -10m A I_C= -1 A, I_B= -100m A			-1 -1.1	V V
h_{FE} *Note* 2	DC Current Gain	I_C= -100 mA, V_{CE} = -2V I_C= -500 mA, V_{CE} = -2V I_C= -1A, V_{CE} = -2V	140 80 30			
f_T	Transition Frequency	I_C= -0.1A, V_{CE} = -10V		50		MHz

(1) Device mounted on a PCB area of 1 cm²

(2) Pulsed: Pulse duartion = 300µs, duty cycle 1.5%

Obsolete Product(s) - Obsolete Product(s)

Distributor of STMicroelectronics: Excellent Integrated System Limited
Datasheet of STF817A - TRANS PNP 80V 1.5A SOT89
Contact us: sales@integrated-circuit.com Website: www.integrated-circuit.com

3 Package mechanical data

In order to meet environmental requirements, ST offers these devices in ECOPACK® packages. These packages have a Lead-free second level interconnect . The category of second level interconnect is marked on the package and on the inner box label, in compliance with JEDEC Standard JESD97. The maximum ratings related to soldering conditions are also marked on the inner box label. ECOPACK is an ST trademark. ECOPACK specifications are available at: www.st.com

Obsolete Product(s) - Obsolete Product(s)

SOT-223 MECHANICAL DATA

DIM.	mm			inch		
	MIN.	TYP.	MAX.	MIN.	TYP.	MAX.
A			1.80			0.071
B	0.60	0.70	0.80	0.024	0.027	0.031
B1	2.90	3.00	3.10	0.114	0.118	0.122
c	0.24	0.26	0.32	0.009	0.010	0.013
D	6.30	6.50	6.70	0.248	0.256	0.264
e		2.30			0.090	
e1		4.60			0.181	
E	3.30	3.50	3.70	0.130	0.138	0.146
H	6.70	7.00	7.30	0.264	0.276	0.287
V			10°			10°
A1		0.02				

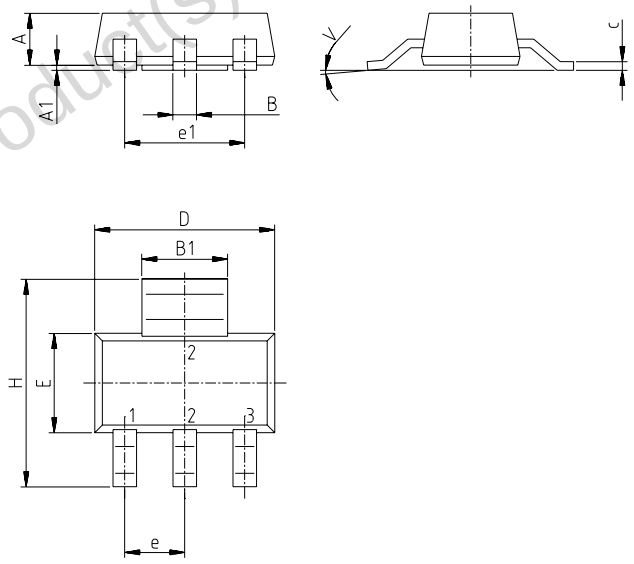

P008B

Obsolete Product(s) - Obsolete Product(s)

SOT-89 MECHANICAL DATA

DIM.	mm			mils		
	MIN.	TYP.	MAX.	MIN.	TYP.	MAX.
A	1.4		1.6	55.1		63.0
B	0.44		0.56	17.3		22.0
B1	0.36		0.48	14.2		18.9
C	0.35		0.44	13.8		17.3
C1	0.35		0.44	13.8		17.3
D	4.4		4.6	173.2		181.1
D1	1.62		1.83	63.8		72.0
E	2.29		2.6	90.2		102.4
e	1.42		1.57	55.9		61.8
e1	2.92		3.07	115.0		120.9
H	3.94		4.25	155.1		167.3
L	0.89		1.2	35.0		47.2

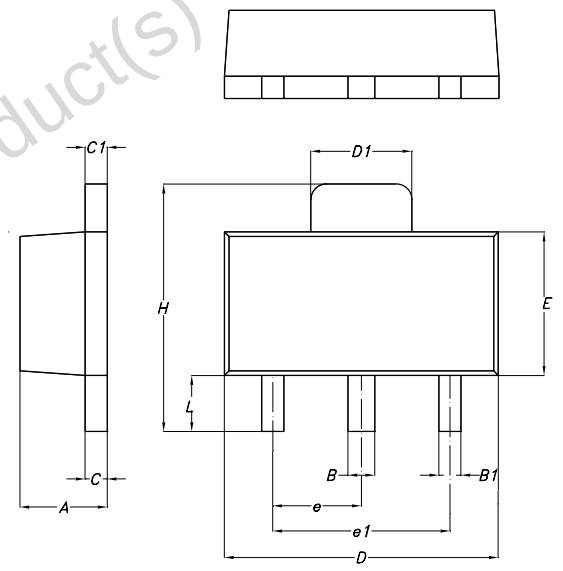

P025H

Obsolete Product(s) - Obsolete Product(s)

Distributor of STMicroelectronics: Excellent Integrated System Limited
Datasheet of STF817A - TRANS PNP 80V 1.5A SOT89
Contact us: sales@integrated-circuit.com Website: www.integrated-circuit.com

4 Revision History

Date	Revision	Changes
03-Nov-2005	1	First release

Obsolete Product(s) - Obsolete Product(s)

Distributor of STMicroelectronics: Excellent Integrated System Limited
Datasheet of STF817A - TRANS PNP 80V 1.5A SOT89
Contact us: sales@integrated-circuit.com Website: www.integrated-circuit.com

Obsolete Product(s) - Obsolete Product(s)

Information furnished is believed to be accurate and reliable. However, STMicroelectronics assumes no responsibility for the consequences of use of such information nor for any infringement of patents or other rights of third parties which may result from its use. No license is granted by implication or otherwise under any patent or patent rights of STMicroelectronics. Specifications mentioned in this publication are subject to change without notice. This publication supersedes and replaces all information previously supplied. STMicroelectronics products are not authorized for use as critical components in life support devices or systems without express written approval of STMicroelectronics.

The ST logo is a registered trademark of STMicroelectronics.
All other names are the property of their respective owners

© 2005 STMicroelectronics - All rights reserved

STMicroelectronics group of companies

Australia - Belgium - Brazil - Canada - China - Czech Republic - Finland - France - Germany - Hong Kong - India - Israel - Italy - Japan - Malaysia - Malta - Morocco - Singapore - Spain - Sweden - Switzerland - United Kingdom - United States of America

www.st.com

Distributor of STMicroelectronics: Excellent Integrated System Limited
Datasheet of STF817A - TRANS PNP 80V 1.5A SOT89
Contact us: sales@integrated-circuit.com Website: www.integrated-circuit.com

Obsolete Product(s) - Obsolete Product(s)