Excellent Integrated System Limited

Stocking Distributor

Click to view price, real time Inventory, Delivery & Lifecycle Information:

Texas Instruments
PTN78000AAH

For any questions, you can email us directly:
sales@integrated-circuit.com

Distributor of Texas Instruments: Excellent Integrated System Limited
Datasheet of PTN78000AAH - REG SW -15 TO -3.3V 1.5A HORZ TH
Contact us: sales@integrated-circuit.com Website: www.integrated-circuit.com

1.5-A, WIDE-INPUT ADJUSTABLE BUCK-BOOST SWITCHING REGULATOR

FEATURES

- **1.5-A Output Current**
- **Wide-Input Voltage (7 V to 29 V)**
- **Wide-Output Voltage Adjust (–15 V to –3 V)**
- **High Efficiency (Up to 84%)**
- **Output Current Limit**
- **Overtemperature Shutdown**
- **Operating Temperature: –40°C to 85°C**
- **Surface-Mount Package Available**

APPLICATIONS

- **General-Purpose, Industrial Controls, HVAC Systems, Test and Measurement, Medical Instrumentation, AC/DC Adaptors, Vehicles, Marine, and Avionics**

DESCRIPTION

The PTN78000A is a series of high-efficiency, buck-boost integrated switching regulators (ISR), that represent the third generation in the evolution of the PT78NR100 series of products. In new designs, it should be considered in place of the PT78NR100 series of single in-line pin (SIP) products. The PTN78000A is smaller and lighter than its predecessor, and has either similar or improved electrical performance characteristics. The caseless, double-sided package also exhibits improved thermal characteristics, and is compatible with TI's roadmap for RoHS and lead-free compliance.

Operating from a wide-input voltage range, the PTN78000A provides high-efficiency, positive-to-negative voltage conversion for loads of up to 1.5 A. The output voltage is set using a single external resistor, and may be set to any value within the range, –15 V to –3 V.

The PTN78000A has undervoltage lockout, and is suited to a wide variety of general-purpose applications that operate off 12-V, 24-V, or tightly regulated 28-V dc power.

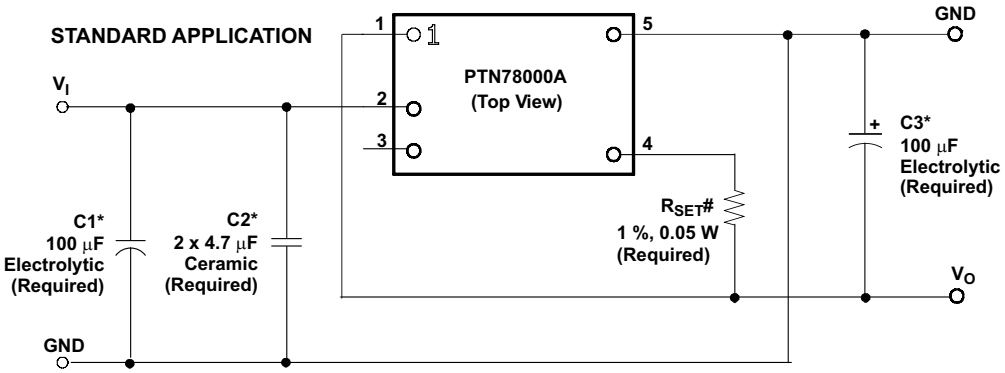

*See the *Application Information* for capacitor recommendation.

#R_{SET} is required to adjust the output voltage lower than -3 V. See the *Application Information* for values.

Please be aware that an important notice concerning availability, standard warranty, and use in critical applications of Texas Instruments semiconductor products and disclaimers thereto appears at the end of this data sheet.

PRODUCTION DATA information is current as of publication date. Products conform to specifications per the terms of the Texas Instruments standard warranty. Production processing does not necessarily include testing of all parameters.

Copyright © 2005–2006, Texas Instruments Incorporated

These devices have limited built-in ESD protection. The leads should be shorted together or the device placed in conductive foam during storage or handling to prevent electrostatic damage to the MOS gates.

ORDERING INFORMATION

PTN78000A (Basic Model)				
Output Voltage	**Part Number**	**Description**	**Pb – free and RoHS Compatible**	**Package Designator**
–15 V to –3 V	PTN78000AAH	Horizontal T/H	Yes	EUS
	PTN78000AAS (1) (2)	Horizontal SMD	No	EUT
	PTN78000AAZ (1) (3)	Horizontal SMD	Yes	EUT

(1) Add a T suffix for tape and reel option on SMD packages.
(2) *Standard option* specifies Sn/Pb solder ball material.
(3) *Lead (Pb) - free option* specifies Sn/Ag solder ball material.

ABSOLUTE MAXIMUM RATINGS (1)

over operating free-air temperature range unless otherwise noted
all voltages with respect to GND (pin 1),

				PTN78000A	UNIT
T_A	Operating free-air temperature	Over V_I range		–40 to 85	°C
	Wave solder temperature	Surface temperature of module body or pins **(5 seconds)**	Horizontal SMD (suffix AH)	260	
	Solder reflow temperature	Surface temperature of module body or pins	Horizontal SMD (suffix AS)	235	
			Horizontal SMD (suffix AZ)	260	
T_{stg}	Storage temperature			–40 to 125	

(1) Stresses beyond those listed under absolute maximum ratings may cause permanent damage to the device. These are stress ratings only, and functional operation of the device at these or any other conditions beyond those indicated under recommended operating conditions is not implied. Exposure to absolute-maximum-rated conditions for extended periods may affect device reliability.

RECOMMENDED OPERATING CONDITIONS

		MIN	MAX	UNIT
V_I	Input voltage	7	$32 - \|V_O\|$	V
T_A	Operating free-air temperature	–40	85	°C
P_O	Output power		9	W

PACKAGE SPECIFICATIONS

PTN78000A (Suffix AH, AS, and AZ)			
Weight			2 grams
Flammability	Meets UL 94 V-O		
Mechanical shock	Per Mil-STD-883D, Method 2002.3, 1 ms, ½ sine, mounted		500 G (1)
Mechanical vibration	Mil-STD-883D, Method 2007.2, 20-2000 Hz	Horizontal T/H (suffix AH)	20 G (1)
		Horizontal SMD (suffix AS & AZ)	15 G (1)

(1) Qualification limit.

ELECTRICAL CHARACTERISTICS

operating at 25°C free-air temperature, V_I = 12 V, V_O = –5 V, I_O = I_O (max), C_1 = 100 μF, C_2 = 2x 4.7 μF, C_3 = 100 μF (unless otherwise noted)

PARAMETER		TEST CONDITIONS		MIN	TYP	MAX	UNIT
I_O	Output current	T_A = 85°C, natural convection airflow	V_O = –15 V	0.1		0.6 (1)	A
			V_O = –12 V	0.1		0.75 (1)	
			V_O = –5 V	0.1		1.5 (1)	
			V_O = –3.3 V	0.1		1.5 (1)	
V_I	Input voltage range	Over I_O range	V_O = –15 V	7		17 (2)	V
			V_O = –12 V	7		20 (2)	
			V_O = –5 V	7		27 (2)	
			V_O = –3.3 V	7		28.7 (2)	
V_O	Set-point voltage tolerance	T_A = 25°C				±2% (3)	
	Temperature variation	–40°C to 85°C			±0.5%		
	Line regulation	Over V_I range			±10		mV
	Load regulation	Over I_O range			±10		mV
	Total output voltage variation	Includes set point, line, load –40 < T_A < 85°C				±3% (3)	
V_O Adj	Output voltage adjust range	7 V ≤ V_I ≤ (32 – |V_O|) V		–15		–3	V
η	Efficiency	V_I = 12 V, R_{SET} = 100 Ω, V_O = –15 V			83%		
		V_I = 12 V, R_{SET} = 2 kΩ, V_O = –12 V			84%		
		V_I = 12 V, R_{SET} = 28.7 kΩ, V_O = –5 V			82%		
		V_I = 12 V, R_{SET} = 221 kΩ, V_O = –3.3 V			77%		
	Output voltage ripple	20-MHz bandwidth			2% V_O		$V_{(PP)}$
$I_{O\ (LIM)}$	Current limit threshold	ΔV_O = –50 mV			3.2		A
	Transient response	1 A/μs load step from 50% to 100% $I_O$max					
			Recovery time		200		μs
			V_O over/undershoot		1		%V_O
F_S	Switching frequency	Over V_I and I_O ranges		440	550	660	kHz
UVLO	Undervoltage lockout	V_I increasing			5.5		V
C_I	External input capacitance	Ceramic		9.4 (4)			μF
		Nonceramic		100 (4)			μF
C_O	External output capacitance	Ceramic				200	μF
		Nonceramic		100 (5)		1,000	μF
		Equivalent series resistance (nonceramic)		14 (6)			mΩ
MTBF	Calculated reliability	Per Telcordia SR-332, 50% stress, T_A = 40°C, ground benign		8.9			10^6 Hrs

(1) The maximum output current is 1.5 A or the maximum output power is 9 W, whichever is less.
(2) The maximum input voltage is limited and defined to be (32 – |V_O|) volts.
(3) The set-point voltage tolerance is affected by the tolerance and stability of R_{SET}. The stated limit is unconditionally met if R_{SET} has a tolerance of 1% with 100 ppm/°C or better temperature stability.
(4) A 100-μF electrolytic capacitor and two 4.7-μF ceramic capacitors are required across the input (V_I and GND) for proper operation. Locate the ceramic capacitance close to the module.
(5) 100 μF of output capacitance is required for proper operation. See the application information for further guidance.
(6) This is the typical ESR for all the electrolytic (nonceramic) capacitance. Use 17 mΩ as the minimum when using maximum ESR values to calculate.

PIN ASSIGNMENT

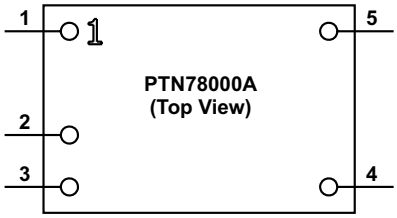

TERMINAL FUNCTIONS

TERMINAL		I/O	DESCRIPTION
NAME	NO.		
V_O	1	O	The negative output voltage power node with respect to the GND node. It is also the reference for the *V_O Adjust* control inputs.
V_I	2	I	The positive input voltage power node to the module, which is referenced to common GND.
N/C	3		This pin is active and must be isolated from any electrical connection.
V_O Adjust	4	I	A 1% resistor must be connected between pin 1 and pin 4 to set the output voltage of the module lower than –3 V. If left open-circuit, the output voltage defaults to –3 V. The temperature stability of the resistor should be 100 ppm/°C (or better). The set-point range is –15 V to –3 V. The standard resistor value for a number of common output voltages is provided in the application information.
GND	5	I/O	The common ground connection for the V_I and V_O power connections.

TYPICAL CHARACTERISTICS (7-V INPUT)(1)(2)

EFFICIENCY vs OUTPUT CURRENT

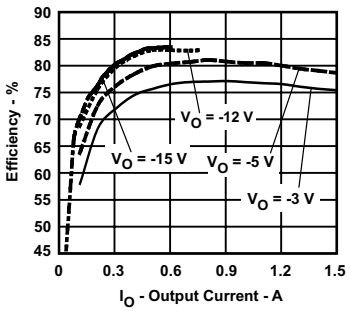

Figure 1.

OUTPUT VOLTAGE RIPPLE vs OUTPUT CURRENT

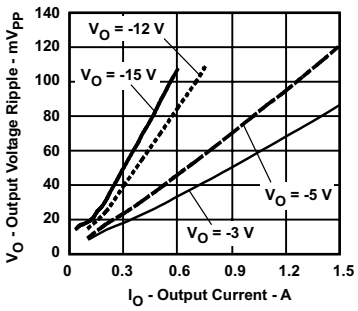

Figure 2.

POWER DISSIPATION vs OUTPUT CURRENT

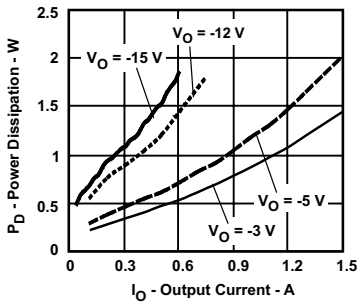

Figure 3.

TEMPERATURE DERATING vs OUTPUT CURRENT

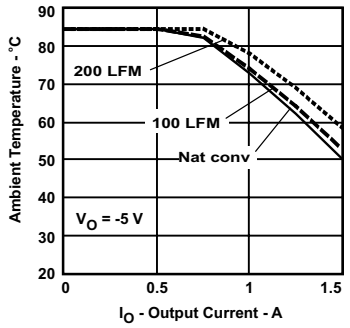

Figure 4.

TEMPERATURE DERATING vs OUTPUT CURRENT

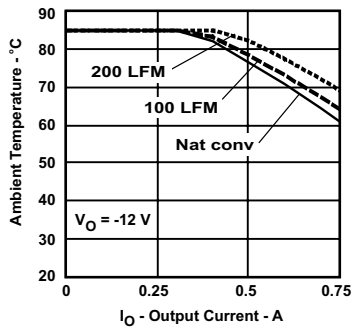

Figure 5.

TEMPERATURE DERATING vs OUTPUT CURRENT

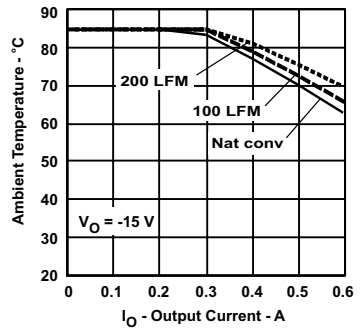

Figure 6.

(1) The electrical characteristic data has been developed from actual products tested at 25°C. This data is considered typical for the converter. Applies to Figure 1, Figure 2, and Figure 3.

(2) The temperature derating curves represent the conditions at which internal components are at or below the manufacturer's maximum operating temperatures. Derating limits apply to modules soldered directly to a 100 mm x 100 mm, double-sided PCB with 2 oz. copper. For surface mount packages, multiple vias (plated through holes) are required to add thermal paths to the power pins. Please refer to the mechanical specification for more information. Applies toFigure 4 ,Figure 5 , and Figure 6.

TYPICAL CHARACTERISTICS (12-V INPUT) (1) (2)

EFFICIENCY vs OUTPUT CURRENT

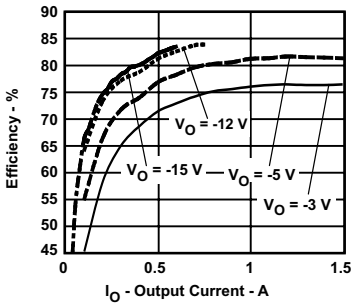

Figure 7.

OUTPUT VOLTAGE RIPPLE vs OUTPUT CURRENT

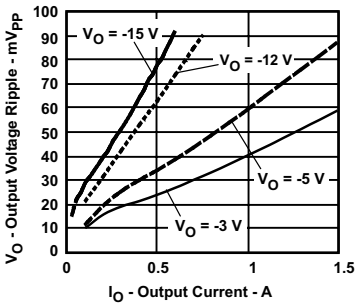

Figure 8.

POWER DISSIPATION vs OUTPUT CURRENT

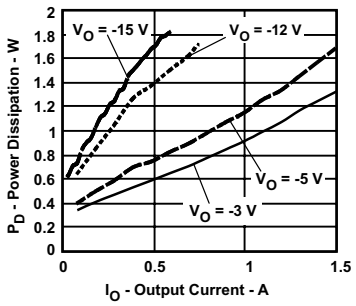

Figure 9.

TEMPERATURE DERATING vs OUTPUT CURRENT

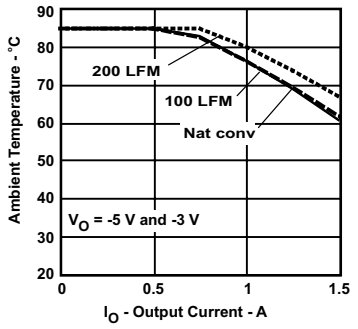

Figure 10.

TEMPERATURE DERATING vs OUTPUT CURRENT

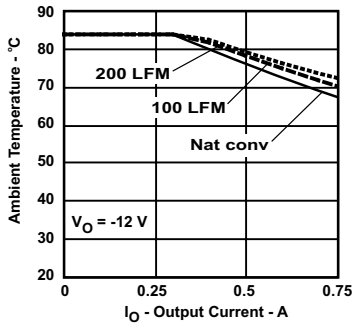

Figure 11.

TEMPERATURE DERATING vs OUTPUT CURRENT

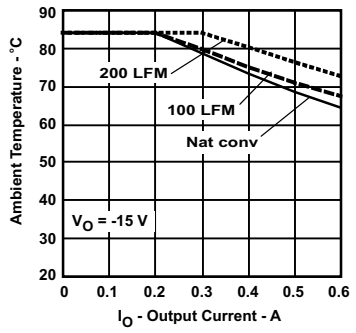

Figure 12.

(1) The electrical characteristic data has been developed from actual products tested at 25°C. This data is considered typical for the converter. Applies to Figure 7, Figure 8, and Figure 9.

(2) The temperature derating curves represent the conditions at which internal components are at or below the manufacturer's maximum operating temperatures. Derating limits apply to modules soldered directly to a 100-mm x 100-mm, double-sided PCB with 2 oz. copper. For surface mount packages, multiple vias (plated through holes) are required to add thermal paths to the power pins. Please refer to the mechanical specification for more information. Applies to Figure 10, Figure 11, and Figure 12.

Distributor of Texas Instruments: Excellent Integrated System Limited
Datasheet of PTN78000AAH - REG SW -15 TO -3.3V 1.5A HORZ TH
Contact us: sales@integrated-circuit.com Website: www.integrated-circuit.com

TYPICAL CHARACTERISTICS (24-V INPUT) (1) (2)

EFFICIENCY vs OUTPUT CURRENT

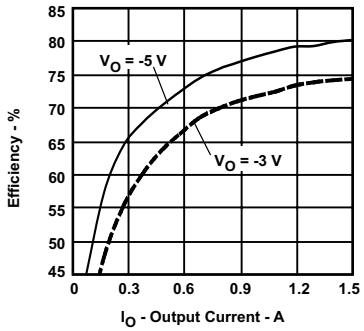

Figure 13.

OUTPUT VOLTAGE RIPPLE vs OUTPUT CURRENT

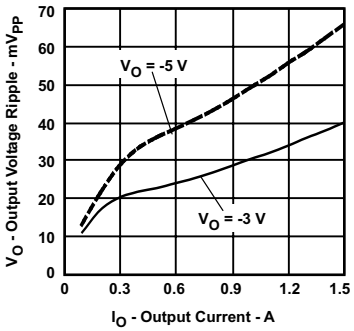

Figure 14.

POWER DISSIPATION vs OUTPUT CURRENT

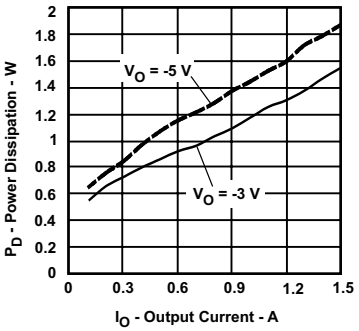

Figure 15.

TEMPERATURE DERATING vs OUTPUT CURRENT

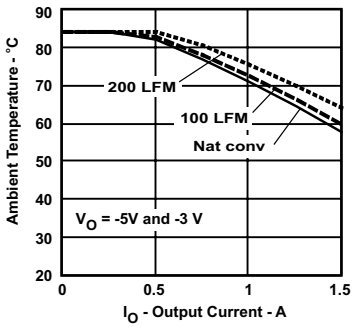

Figure 16.

(1) The electrical characteristic data has been developed from actual products tested at 25°C. This data is considered typical for the converter. Applies to Figure 13, Figure 14, and Figure 15.

(2) The temperature derating curves represent the conditions at which internal components are at or below the manufacturer's maximum operating temperatures. Derating limits apply to modules soldered directly to a 100-mm x 100-mm, double-sided PCB with 2 oz. copper. For surface mount packages, multiple vias (plated through holes) are required to add thermal paths to the power pins. Please refer to the mechanical specification for more information. Applies to Figure 16.

APPLICATION INFORMATION

Adjusting the Output Voltage of the PTN78000A Wide-Output Adjust Power Modules

General

A resistor must be connected directly between the *V_O Adjust* control (pin 4) and the output *voltage* (pin 7) to set the output voltage lower than –3 V. The adjustment range is from –15 V to –3 V. If pin 4 is left open, the output voltage defaults to the highest value, –3 V.

Table 1 gives the standard resistor value for a number of common voltages, and with the actual output voltage that the value produces. For other output voltages, the resistor value can either be calculated using the following formula, or simply selected from the range of values given in Table 2. Figure 17 shows the placement of the required resistor.

$$R_{SET} = 54.9\ k\Omega \times \frac{1.25\ V}{|V_O| - 3\ V} - 5.62\ k\Omega$$

Input Voltage Considerations

The PTN78000A is a buck-boost switching regulator. In order that the output remains in regulation, the input voltage must not exceed the output by a maximum differential voltage.

For satisfactory performance, the maximum operating input voltage is (32 - $|V_O|$) volts.

As an example, Table 1 gives the operating input voltage range for the common output bus voltages. In addition, the Electrical Characteristics define the available output voltage adjust range for various input voltages.

Table 1. Standard Values of R_{set} for Common Output Voltages

V_O (Required)	R_{SET} (Standard Value)	V_O (Actual)	Operating V_I Range
–15 V	100 Ω	–14.997 V	9 V to 17 V
–12 V	2 kΩ	–12.006 V	9 V to 20 V
–5 V	28.7 kΩ	–5.000 V	9 V to 27 V
–3.3 V	221 kΩ	–3.303 V	9 V to 28.7 V

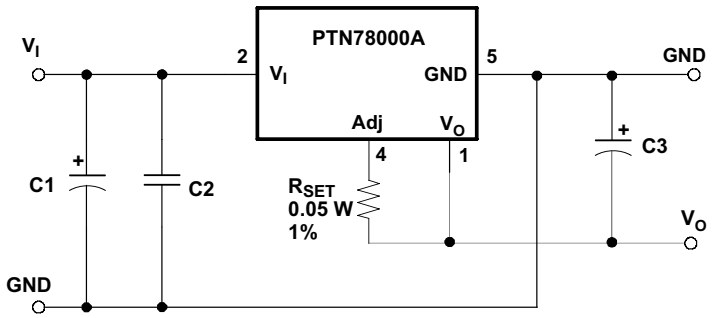

(1) A 0.05-W rated resistor may be used. The tolerance should be 1%, with a temperature stability of 100 ppm/°C (or better). Place the resistor as close to the regulator as possible. Connect the resistor directly between pins 4 and 1 using dedicated PCB traces.

(2) Never connect capacitors from *V_O Adjust* to either *GND* or *V_O*. Any capacitance added to the *V_O Adjust* pin affects the stability of the regulator.

Figure 17. V_O Adjust Resistor Placement

Table 2. Output Voltage Set-Point Resistor Values

V_O Required	R_{SET}	V_O Required	R_{SET}	V_O Required	R_{SET}
–15.0 V	99 Ω	–11.9 V	2.09 kΩ	–8.8 V	6.21 kΩ
–14.9 V	147 Ω	–11.8 V	2.18 kΩ	–8.6 V	6.63 kΩ
–14.8 V	196 Ω	–11.7 V	2.27 kΩ	–8.4 V	7.09 kΩ
–14.7 V	245 Ω	–11.6 V	2.36 kΩ	–8.2 V	7.58 kΩ
–14.6 V	296 Ω	–11.5 V	2.45 kΩ	–8.0 V	8.11 kΩ
–14.5 V	347 Ω	–11.4 V	2.55 kΩ	–7.8 V	8.68 kΩ
–14.4 V	400 Ω	–11.3 V	2.65 kΩ	–7.6 V	9.30 kΩ
–14.3 V	453 Ω	–11.2 V	2.75 kΩ	–7.4 V	9.98 kΩ
–14.2 V	507 Ω	–11.1 V	2.82 kΩ	–7.2 V	10.7 kΩ
–14.1 V	562 Ω	–11.0 V	2.96 kΩ	–7.0 V	11.5 kΩ
–14.0 V	619 Ω	–10.9 V	3.07 kΩ	–6.8 V	12.4 kΩ
–13.9 V	676 Ω	–10.8 V	3.18 kΩ	–6.6 V	13.4 kΩ
–13.8 V	734 Ω	–10.7 V	3.29 kΩ	–6.4 V	14.6 kΩ
–13.7 V	794 Ω	–10.6 V	3.41 kΩ	–6.2 V	15.8 kΩ
–13.6 V	854 Ω	–10.5 V	3.53 kΩ	–6.0 V	17.3 kΩ
–13.5 V	916 Ω	–10.4 V	3.65 kΩ	–5.8 V	18.9 kΩ
–13.4 V	979 Ω	–10.3 V	3.78 kΩ	–5.6 V	20.7 kΩ
–13.3 V	1.04 kΩ	–10.2 V	3.91 kΩ	–5.4 V	22.9 kΩ
–13.2 V	1.11 kΩ	–10.1 V	4.04 kΩ	–5.2 V	25.6 kΩ
–13.1 V	1.18 kΩ	–10.0 V	4.18 kΩ	–5.0 V	28.7 kΩ
–13.0 V	1.24 kΩ	–9.9 V	4.33 kΩ	–4.8 V	32.5 kΩ
–12.9 V	1.31 kΩ	–9.8 V	4.47 kΩ	–4.6 V	37.2 kΩ
–12.8 V	1.38 kΩ	–9.7 V	4.62 kΩ	–4.4 V	43.4 kΩ
–12.7 V	1.46 kΩ	–9.6 V	4.78 kΩ	–4.2 V	51.6 kΩ
–12.6 V	1.52 kΩ	–9.5 V	4.94 kΩ	–4.0 V	63.0 kΩ
–12.5 V	1.60 kΩ	–9.4 V	5.10 kΩ	–3.8 V	80.1 kΩ
–12.4 V	1.68 kΩ	–9.3 V	5.27 kΩ	–3.6 V	109 kΩ
–12.3 V	1.76 kΩ	–9.2 V	5.45 kΩ	–3.4 V	166 kΩ
–12.2 V	1.84 kΩ	–9.1 V	5.63 kΩ	–3.2 V	338 kΩ
–12.1 V	1.92 kΩ	–9.0 V	5.82 kΩ	–3.0 V	OPEN
–12.0 V	2.01 kΩ	–8.9 V	6.01 kΩ		

CAPACITOR RECOMMENDATIONS FOR THE PTN78000 WIDE-OUTPUT ADJUST POWER MODULES

Input Capacitor

The minimum requirements for the input bus is 100 μF of nonceramic capacitance and 9.4 μF (2 x 4.7 μF) of ceramic capacitance, in either an X5R or X7R temperature characteristic, and 100 μF of electrolytic capacitance. Ceramic capacitors should be located within 0.5 inch (1,27 cm) of the regulator's input pins. Electrolytic capacitors should be used at the input in addition to the required ceramic capacitance. The minimum ripple current rating for any nonceramic capacitance must be at least 250 mA rms. The ripple current rating of electrolytic capacitors is a major consideration when they are used at the input. This ripple current requirement can be reduced by placing more ceramic capacitors at the input, in addition to the minimum required 9.4 μF.

Tantalum capacitors are not recommended for use at the input bus, as none were found to meet the minimum voltage rating of 2 × (maximum dc voltage + ac ripple). The 2× rating is standard practice for regular tantalum capacitors to ensure reliability. Polymer-tantalum capacitors are more reliable and are available with a maximum rating of typically 20 V. These can be used with input voltages up to 16 V.

Output Capacitor

The minimum capacitance required to ensure stability is a 100 μF. Either ceramic or electrolytic-type capacitors can be used. The minimum ripple current rating for the nonceramic capacitance must be at least 200 mA rms. The stability of the module and voltage tolerances is compromised if the capacitor is not placed near the output bus pins. A high-quality, computer-grade electrolytic capacitor should be adequate. A ceramic capacitor can be also be located within 0.5 inch (1,27 cm) of the output pin.

For applications with load transients (sudden changes in load current), the regulator response improves with additional capacitance. Additional electrolytic capacitors should be located close to the load circuit. These capacitors provide decoupling over the frequency range, 2 kHz to 150 kHz. Aluminum electrolytic capacitors are suitable for ambient temperatures above 0°C. For operation below 0°C, tantalum or Os-Con-type capacitors are recommended. When using one or more nonceramic capacitors, the calculated equivalent ESR should be no lower than 14 mΩ (17 mΩ using the manufacturer's maximum ESR for a single capacitor). A list of recommended capacitors and vendors are identified in Table 3.

Ceramic Capacitors

Above 150 kHz, the performance of aluminum electrolytic capacitors becomes less effective. To further reduce the reflected input ripple current, or the output transient response, multilayer ceramic capacitors must be added. Ceramic capacitors have low ESR, and their resonant frequency is higher than the bandwidth of the regulator. When placed at the output, their combined ESR is not critical as long as the total value of ceramic capacitance does not exceed 200 μF.

Tantalum Capacitors

Tantalum-type capacitors may be used at the output, and are recommended for applications where the ambient operating temperature can be less than 0°C. The AVX TPS, Sprague 593D/594/595, and Kemet T495/T510/T520 capacitors series are suggested over many other tantalum types due to their rated surge, power dissipation, and ripple current capability. As a caution, many general-purpose tantalum capacitors have considerably higher ESR, reduced power dissipation, and lower ripple current capability. These capacitors are also less reliable as they have lower power dissipation and surge current ratings. Tantalum capacitors that do not have a stated ESR or surge current rating are not recommended for power applications. When specifying Os-Con and polymer-tantalum capacitors for the output, the minimum ESR limit is encountered well before the maximum capacitance value is reached.

Capacitor Table

The capacitor table, Table 3, identifies the characteristics of capacitors from various vendors with acceptable ESR and ripple current (rms) ratings. The recommended number of capacitors required at both the input and output buses is identified for each capacitor type. This is not an extensive capacitor list. Capacitors from other vendors are available with comparable specifications. Those listed are for guidance. The rms rating and ESR (at 100 kHz) are critical parameters necessary to ensure both optimum regulator performance and long capacitor life.

Designing for Load Transients

The transient response of the dc/dc converter has been characterized using a load transient with a di/dt of 1 A/μs. The typical voltage deviation for this load transient is given in the data sheet specification table using the required value of output capacitance. As the di/dt of a transient is increased, the response of a converter's regulation circuit ultimately depends on its output capacitor decoupling network. This is an inherent limitation of any dc/dc converter once the speed of the transient exceeds its bandwidth capability. If the target application specifies a higher di/dt or lower voltage deviation, the requirement can only be met with additional output capacitor decoupling. In these cases, special attention must be paid to the type, value, and ESR of the capacitors selected.

If the transient performance requirements exceed those specified in the data sheet, the selection of output capacitors becomes more important. Review the minimum ESR in the characteristic data sheet for details on the capacitance maximum.

Table 3. Recommended Input/Output Capacitors

CAPACITOR VENDOR/ COMPONENT SERIES	CAPACITOR CHARACTERISTICS					QUANTITY		VENDOR NUMBER
	WORKING VOLTAGE (V)	VALUE (μF)	EQUIVALENT SERIES RESISTANCE (ESR) (Ω)	85°C MAXIMUM RIPPLE CURRENT (I_{rms}) (mA)	PHYSICAL SIZE (mm)	INPUT BUS	OUTPUT BUS	
FC(Radial)	35	100	0.117	550	8 × 11,5	≥1	1	EEUFC1H181
FC (SMD)	35	100	0.015	670	10 × 10,2	≥1 (1)	1	EEVFC1V101P
United Chemi-Con PXA (SMD)	16	180	0.016	4360	8 × 12	≥1 (1)	≤ 1	PXA16VC180MF60 (V_I, $\|V_O\|$ < 14 V)
PS	25	100	0.020	4300	8 × 10,5	≥1 (1)	≤ 1	10FS100M (V_I, $\|V_O\|$ < 22 V)
LXZ	50	100	0.220	485	8 × 12,5	≥1	1	LXZ50VB101M8X12LL
MVY(SMD)	50	100	0.300	500	10 × 10	≥1	1	MVY50VC101M10X10TP ($\|V_O\|$ ≤ 5 V)
Nichicon UWG (SMD)	50	100	0.300	500	10 × 10	≥1	1	UWG1H101MNR1GS
F550 (Tantalum)	10	100	0.055	2000	7.7 × 4,3	N/R (1)	≤ 3 (2)	F551A107MN ($\|V_O\|$ ≤ 5 V)
HD	50	120	0.072	979	10 × 12,5	≥1	1	UHD1H101MPR
Sanyo Os-Con SVP (SMD)	20	100	0.024	2500	8 × 12	≥1 (1)	≤ 1	20SVP100M (V_I, $\|V_O\|$ ≤ 16 V)
SP	16	100	0.032	2890	10 × 5	≥ 1 (1)	≤ 1	16SP100M (V_I, $\|V_O\|$ ≤ 14 V)
AVX Tantalum TPS (SMD)	20	100	0.085	1543	7,3 L × 4,3 W × 4,1 H	N/R (3)	≤ 2	TPSV107M020R0085 ($\|V_O\|$ ≤ 10 V)
	20	100	0.200	> 817		N/R (3)	≤ 2	TPSE107M020R0200 ($\|V_O\|$ ≤ 10 V)
Murata X5R Ceramic	16	47	0.002	>1000	3225	1 (1)	≤ 2	GRM32ER61C476M ($\|V_o\|$ ~ V_I≤ 13.5 V)
Murata X5R Ceramic	6.3	47	0.002	>1000	3225	N/R (1)	≤ 2	GRM422X5R476M6.3 ($\|V_O\|$ ≤ 5.5 V)
TDK X7R Ceramic	25	2.2	0.002	>1000	SMD	≥ 4 (4)	1	C3225X7R1E225KT/MT ($\|V_O\|$ ≤ 20 V)
Murata X7R Ceramic	25	2.2	0.002	>1000	3225	≥ 4 (4)	1	GRM32RR71E225K ($\|V_O\|$ ≤ 20 V)
Kemet X7R Ceramic	25	2.2	0.002	>1000	3225	≥ 4 (4)	1	C1210C225K3RAC ($\|V_O\|$ ≤ 20 V)
AVX X7R Ceramic	25	2.2	0.002	>1000	3225	≥ 4 (4)	1	12103C225KAT2A ($\|V_O\|$ ≤ 20 V)
Murata X7R Ceramic	50	4.7	0.002	>1000	3225	≥ 2	1	GRM32ER71H475KA88L
TDK X7R Ceramic	50	2.2	0.002	>1000		≥ 4	1	C3225X7R1H225KT
Murata Radial Through-hole	50	2.2	0.004	>1000		≥ 4	1	RPER71H2R2KK6F03

(1) The voltage rating of the input capacitor must be selected for the desired operating input voltage range of the regulator. To operate the regulator at a higher input voltage, select a capacitor with the next higher voltage rating.
(2) The maximum voltage rating of the capacitor must be selected for the desired set-point voltage (V_O). To operate at a higher output voltage, select a capacitor with a higher voltage rating.
(3) Not recommended (N/R). The voltage rating does not meet the minimum operating limits in most applications.
(4) The maximum rating of the ceramic capacitor limits the regulator's operating input voltage to 20 V. Select a alternative ceramic component to operate at a higher input voltage.

Power-Up Characteristics

When configured per the standard application, the PTN78000A power module produces a regulated output voltage following the application of a valid input source voltage. During power up, internal soft-start circuitry slows the rate that the output voltage rises, thereby limiting the amount of in-rush current that can be drawn from the input source. The soft-start circuitry introduces a short time delay (typically 5 ms – 10 ms) into the power-up characteristic. This is from the point that a valid input source is recognized. Figure 18 shows the power-up waveforms for a PTN78000A, operating from a 12-V input and with the output voltage adjusted to –5 V. The waveforms were measured with a 1.5-A resistive load.

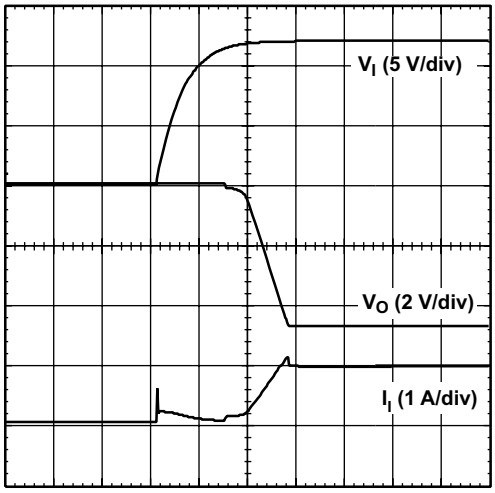

t - Time = 5 ms/div

Figure 18. Power-Up Waveforms

Undervoltage Lockout

The undervoltage lockout (UVLO) circuit prevents the module from attempting to power up until the input voltage is above the UVLO threshold. This prevents the module from drawing excessive current from the input source at power up. Below the UVLO threshold, the module is held off.

Current Limit Protection

The PTN78000 modules protect against load faults with a continuous current limit characteristic. Under a load fault condition, the output current cannot exceed the current limit value. Attempting to draw current that exceeds the current limit value causes the module to progressively reduce its output voltage. Current is continuously supplied to the fault until it is removed. On removal of the fault, the output voltage promptly recovers. When limiting output current, the regulator experiences higher power dissipation, which increases its temperature. If the temperature increase is excessive, the module's overtemperature protection begins to periodically turn the output voltage completely off.

Overtemperature Protection

A thermal shutdown mechanism protects the module's internal circuitry against excessively high temperatures. A rise in temperature may be the result of a drop in airflow, a high ambient temperature, or a sustained current-limit condition. If the junction temperature of the internal control IC rises excessively, the module turns itself off, reducing the output voltage to zero. The module instantly restarts when the sensed temperature decreases by a few degrees.

Note: *Overtemperature protection is a last-resort mechanism to prevent damage to the module. It should not be relied on as permanent protection against thermal stress. Always operate the module within its temperature derated limits, for the worst-case operating conditions of output current, ambient temperature, and airflow. Operating the module above these limits, albeit below the thermal shutdown temperature, reduces the long-term reliability of the module.*

Optional Input/Output Filters

Power modules include internal input and output ceramic capacitors in all their designs. However, some applications require much lower levels of either input reflected or output ripple/noise. This application describes various filters and design techniques found to be successful in reducing both input and output ripple/noise.

Input/Output Capacitors

The easiest way to reduce output ripple and noise is to add one or more 1-μF ceramic capacitors, such as C5 shown in Figure 19. Ceramic capacitors should be placed close to the output power terminals. A single 4.7-μF capacitor reduces the output ripple/noise by 10% to 30% for modules with a rated output current of less than 3 A. (Note: C4 is recommended to improve the regulators transient response and does not reduce output ripple and noise.)

Switching regulators draw current from the input line in pulses at their operating frequency. The amount of reflected (input) ripple/noise generated is directly proportional to the equivalent source impedance of the power source including the impedance of any input lines. The addition of C1, minimum 4.7-μF ceramic capacitor, near the input power pins, reduces reflected conducted ripple/noise by 20% to 30%.

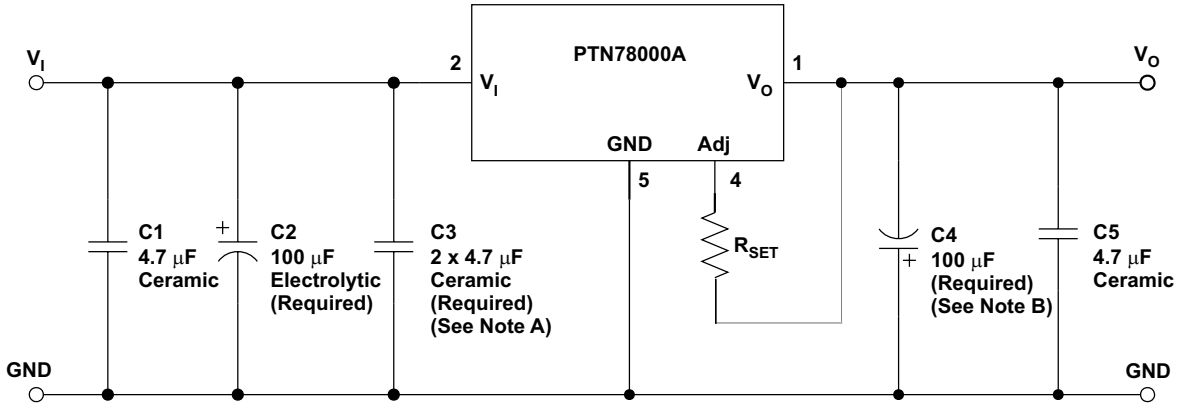

A. See specifications for required value and type.

B. See *Application Information* for suggested value and type.

Figure 19. Adding High-Frequency Bypass Capacitors to the Input and Output

π Filters

If a further reduction in ripple/noise level is required for an application, higher order filters must be used. A π (pi) filter, employing a ferrite bead (Fair-Rite Pt. No. 2673000701 or equivalent) in series with the input or output terminals of the regulator reduces the ripple/noise by at least 20 db (see Figure 20 and Figure 21). In order for the inductor to be effective in reduction of ripple and noise ceramic capacitors are required. (See the Capacitor Recommendations for the PTN78000A for additional information on vendors and component suggestions.)

These inductors plus ceramic capacitors form an excellent filter because of the rejection at the switching frequency (650 kHz - 1 MHz). The placement of this filter is critical. It must be located as close as possible to the input or output pins to be effective. The ferrite bead is small (12,5 mm × 3 mm), easy to use, low cost, and has low dc resistance. Fair-Rite also manufactures a surface-mount bead (part number 2773021447), through hole (part number 2673000701) rated to 5 A. Alternatively, 1-μH to 5-μH inductors can be used in place of the ferrite inductor bead.

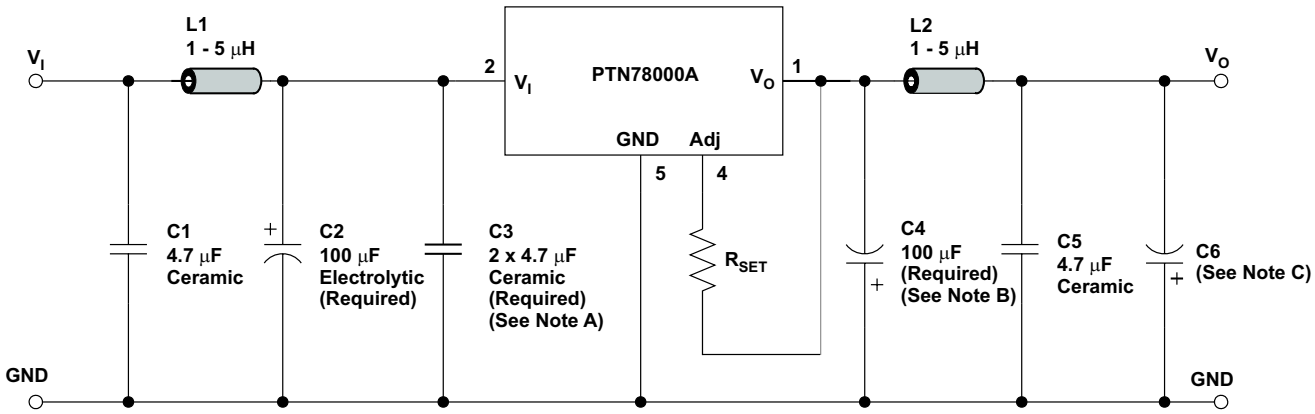

A. See specifications for required value and type.

B. See *Application Information* for suggested value and type.

C. Recommended for applications with load transients.

Figure 20. Adding π Filters (I_O≤ 3 A)

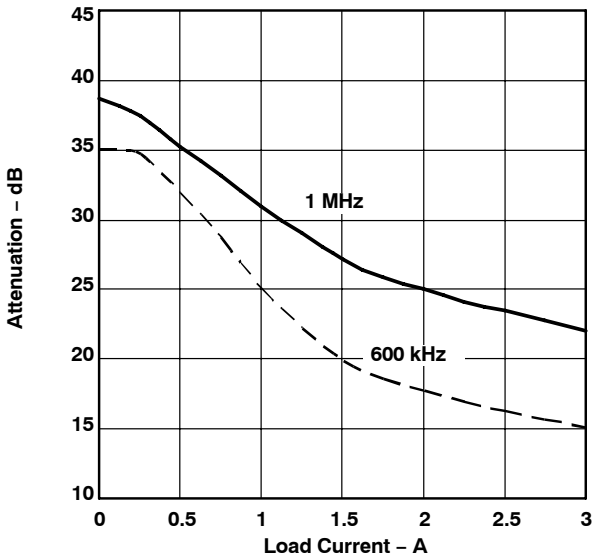

Figure 21. π-Filter Attenuation vs. Load Current

Distributor of Texas Instruments: Excellent Integrated System Limited
Datasheet of PTN78000AAH - REG SW -15 TO -3.3V 1.5A HORZ TH
Contact us: sales@integrated-circuit.com Website: www.integrated-circuit.com

PACKAGE OPTION ADDENDUM

PACKAGING INFORMATION

Orderable Device	Status (1)	Package Type	Package Drawing	Pins	Package Qty	Eco Plan (2)	Lead/ Ball Finish	MSL Peak Temp (3)	Samples (Requires Login)
PTN78000AAH	ACTIVE	Through-Hole Module	EUS	5	56	Pb-Free (RoHS)	SN	N / A for Pkg Type	Request Free Samples
PTN78000AAS	ACTIVE	Surface Mount Module	EUT	5	49	TBD	SNPB	Level-1-235C-UNLIM/ Level-3-260C-168HRS	Request Free Samples
PTN78000AAST	ACTIVE	Surface Mount Module	EUT	5	250	TBD	SNPB	Level-1-235C-UNLIM/ Level-3-260C-168HRS	Purchase Samples
PTN78000AAZ	ACTIVE	Surface Mount Module	EUT	5	49	Pb-Free (RoHS)	SNAGCU	Level-3-260C-168 HR	Request Free Samples
PTN78000AAZT	ACTIVE	Surface Mount Module	EUT	5	250	Pb-Free (RoHS)	SNAGCU	Level-3-260C-168 HR	Purchase Samples

(1) The marketing status values are defined as follows:
ACTIVE: Product device recommended for new designs.
LIFEBUY: TI has announced that the device will be discontinued, and a lifetime-buy period is in effect.
NRND: Not recommended for new designs. Device is in production to support existing customers, but TI does not recommend using this part in a new design.
PREVIEW: Device has been announced but is not in production. Samples may or may not be available.
OBSOLETE: TI has discontinued the production of the device.

(2) Eco Plan - The planned eco-friendly classification: Pb-Free (RoHS), Pb-Free (RoHS Exempt), or Green (RoHS & no Sb/Br) - please check http://www.ti.com/productcontent for the latest availability information and additional product content details.
TBD: The Pb-Free/Green conversion plan has not been defined.
Pb-Free (RoHS): TI's terms "Lead-Free" or "Pb-Free" mean semiconductor products that are compatible with the current RoHS requirements for all 6 substances, including the requirement that lead not exceed 0.1% by weight in homogeneous materials. Where designed to be soldered at high temperatures, TI Pb-Free products are suitable for use in specified lead-free processes.
Pb-Free (RoHS Exempt): This component has a RoHS exemption for either 1) lead-based flip-chip solder bumps used between the die and package, or 2) lead-based die adhesive used between the die and leadframe. The component is otherwise considered Pb-Free (RoHS compatible) as defined above.
Green (RoHS & no Sb/Br): TI defines "Green" to mean Pb-Free (RoHS compatible), and free of Bromine (Br) and Antimony (Sb) based flame retardants (Br or Sb do not exceed 0.1% by weight in homogeneous material)

(3) MSL, Peak Temp. -- The Moisture Sensitivity Level rating according to the JEDEC industry standard classifications, and peak solder temperature.

Important Information and Disclaimer: The information provided on this page represents TI's knowledge and belief as of the date that it is provided. TI bases its knowledge and belief on information provided by third parties, and makes no representation or warranty as to the accuracy of such information. Efforts are underway to better integrate information from third parties. TI has taken and continues to take reasonable steps to provide representative and accurate information but may not have conducted destructive testing or chemical analysis on incoming materials and chemicals. TI and TI suppliers consider certain information to be proprietary, and thus CAS numbers and other limited information may not be available for release.

In no event shall TI's liability arising out of such information exceed the total purchase price of the TI part(s) at issue in this document sold by TI to Customer on an annual basis.

Distributor of Texas Instruments: Excellent Integrated System Limited
Datasheet of PTN78000AAH - REG SW -15 TO -3.3V 1.5A HORZ TH
Contact us: sales@integrated-circuit.com Website: www.integrated-circuit.com

EUS (R–PDSS–T5) DOUBLE SIDED MODULE

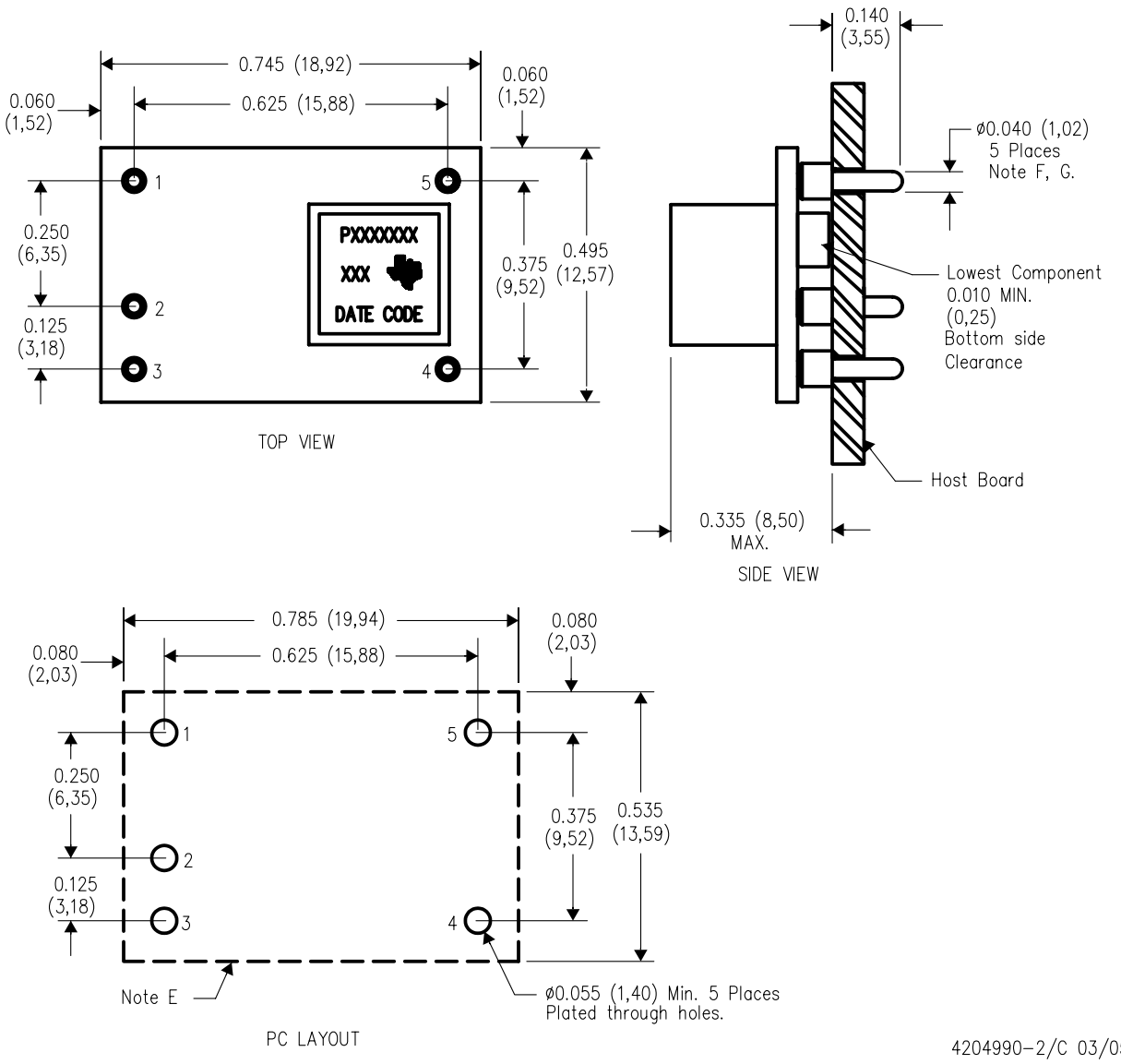

NOTES:
A. All linear dimensions are in inches (mm).
B. This drawing is subject to change without notice.
C. 2 place decimals are ±0.030 (±0,76mm).
D. 3 place decimals are ±0.010 (±0,25mm).
E. Recommended keep out area for user components.
F. Pins are 0.040" (1,02) diameter with 0.070" (1,78) diameter standoff shoulder.
G. All pins: Material – Copper Alloy
Finish – Tin (100%) over Nickel plate

MECHANICAL DATA

EUT (R–PDSS–B5) DOUBLE SIDED MODULE

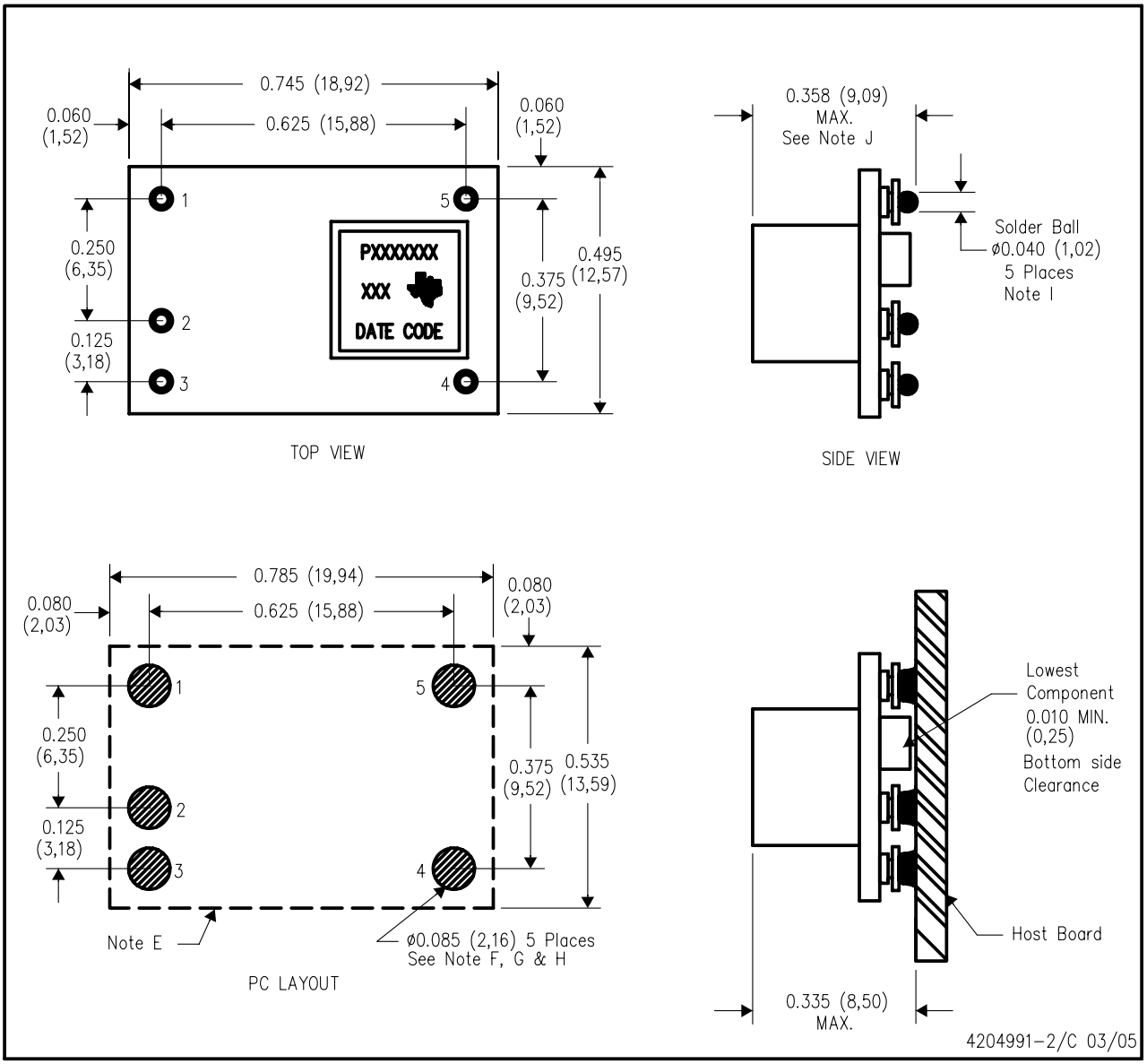

NOTES:
A. All linear dimensions are in inches (mm).
B. This drawing is subject to change without notice.
C. 2 place decimals are ±0.030 (±0,76mm).
D. 3 place decimals are ±0.010 (±0,25mm).
E. Recommended keep out area for user components.
F. Power pin connection should utilize two or more vias to the interior power plane of 0.025 (0,63) I.D. per input, ground and output pin (or the electrical equivalent).
G. Paste screen opening: 0.080 (2,03) to 0.085 (2,16). Paste screen thickness: 0.006 (0,15).
H. Pad type: Solder mask defined.
I. All pins: Material – Copper Alloy
Finish – Tin (100%) over Nickel plate
Solder Ball – See product data sheet.
J. Dimension prior to reflow solder.

IMPORTANT NOTICE

Texas Instruments Incorporated and its subsidiaries (TI) reserve the right to make corrections, modifications, enhancements, improvements, and other changes to its products and services at any time and to discontinue any product or service without notice. Customers should obtain the latest relevant information before placing orders and should verify that such information is current and complete. All products are sold subject to TI's terms and conditions of sale supplied at the time of order acknowledgment.

TI warrants performance of its hardware products to the specifications applicable at the time of sale in accordance with TI's standard warranty. Testing and other quality control techniques are used to the extent TI deems necessary to support this warranty. Except where mandated by government requirements, testing of all parameters of each product is not necessarily performed.

TI assumes no liability for applications assistance or customer product design. Customers are responsible for their products and applications using TI components. To minimize the risks associated with customer products and applications, customers should provide adequate design and operating safeguards.

TI does not warrant or represent that any license, either express or implied, is granted under any TI patent right, copyright, mask work right, or other TI intellectual property right relating to any combination, machine, or process in which TI products or services are used. Information published by TI regarding third-party products or services does not constitute a license from TI to use such products or services or a warranty or endorsement thereof. Use of such information may require a license from a third party under the patents or other intellectual property of the third party, or a license from TI under the patents or other intellectual property of TI.

Reproduction of TI information in TI data books or data sheets is permissible only if reproduction is without alteration and is accompanied by all associated warranties, conditions, limitations, and notices. Reproduction of this information with alteration is an unfair and deceptive business practice. TI is not responsible or liable for such altered documentation. Information of third parties may be subject to additional restrictions.

Resale of TI products or services with statements different from or beyond the parameters stated by TI for that product or service voids all express and any implied warranties for the associated TI product or service and is an unfair and deceptive business practice. TI is not responsible or liable for any such statements.

TI products are not authorized for use in safety-critical applications (such as life support) where a failure of the TI product would reasonably be expected to cause severe personal injury or death, unless officers of the parties have executed an agreement specifically governing such use. Buyers represent that they have all necessary expertise in the safety and regulatory ramifications of their applications, and acknowledge and agree that they are solely responsible for all legal, regulatory and safety-related requirements concerning their products and any use of TI products in such safety-critical applications, notwithstanding any applications-related information or support that may be provided by TI. Further, Buyers must fully indemnify TI and its representatives against any damages arising out of the use of TI products in such safety-critical applications.

TI products are neither designed nor intended for use in military/aerospace applications or environments unless the TI products are specifically designated by TI as military-grade or "enhanced plastic." Only products designated by TI as military-grade meet military specifications. Buyers acknowledge and agree that any such use of TI products which TI has not designated as military-grade is solely at the Buyer's risk, and that they are solely responsible for compliance with all legal and regulatory requirements in connection with such use.

TI products are neither designed nor intended for use in automotive applications or environments unless the specific TI products are designated by TI as compliant with ISO/TS 16949 requirements. Buyers acknowledge and agree that, if they use any non-designated products in automotive applications, TI will not be responsible for any failure to meet such requirements.

Following are URLs where you can obtain information on other Texas Instruments products and application solutions:

Products		**Applications**	
Amplifiers	amplifier.ti.com	Audio	www.ti.com/audio
Data Converters	dataconverter.ti.com	Automotive	www.ti.com/automotive
DLP® Products	www.dlp.com	Communications and Telecom	www.ti.com/communications
DSP	dsp.ti.com	Computers and Peripherals	www.ti.com/computers
Clocks and Timers	www.ti.com/clocks	Consumer Electronics	www.ti.com/consumer-apps
Interface	interface.ti.com	Energy	www.ti.com/energy
Logic	logic.ti.com	Industrial	www.ti.com/industrial
Power Mgmt	power.ti.com	Medical	www.ti.com/medical
Microcontrollers	microcontroller.ti.com	Security	www.ti.com/security
RFID	www.ti-rfid.com	Space, Avionics & Defense	www.ti.com/space-avionics-defense
RF/IF and ZigBee® Solutions	www.ti.com/lprf	Video and Imaging	www.ti.com/video
		Wireless	www.ti.com/wireless-apps

Mailing Address: Texas Instruments, Post Office Box 655303, Dallas, Texas 75265
Copyright © 2010, Texas Instruments Incorporated