Excellent Integrated System Limited

Stocking Distributor

Click to view price, real time Inventory, Delivery & Lifecycle Information:

Bel Fuse Inc.
C1S 750

For any questions, you can email us directly:
sales@integrated-circuit.com

Type C1S

Surface Mount Slow Blow Chip Fuse

HF Pb C1S Series - 1206 Size — RoHS 6 Compliant

Features

- Slow Blow
- Small size, 1206 SMD
- Current rating from 750mA to 5A
- Wide operating temperature range from -55 °C to 125 °C
- Tape & Reel for automatic SMD placement
- Compatible with reflow and wave soldering
- RoHS 6 compliant (MSL = 1)
- Halogen Free
- Leadfree

Applications

- Notebook
- LCD monitor
- PC computer
- Office electronic equipment
- Industrial equipment
- Medical equipment
- POE, POE+
- LCD / LED monitor
- Power supply
- LCD / LED TV
- DC-DC Converter

LEAD FREE = Pb
HALOGEN FREE = HF

Electrical Characteristics (UL STD. 248-14)

Testing Current	Blow Time	
	Minimum	Maximum
100%	4 Hrs.	N/A
200%	1 Sec	120 Sec
300%	0.1 Sec	3 Sec
800%	0.002 Sec	0.05 Sec

Safety Agency Approvals

SAFETY AGENCY	SAFETY AGENCY CERTIFICATE	VOLTAGE RATING (V)	AMPERE RANGE / VOLT @ I.R. ABILITY*
c UL us	E20624	750mA - 5A / 63V AC & DC	750mA - 5A / 63V AC & DC @ 50A

* I.R. = INTERRUPTING RATING = SHORT CIRCUIT RATING (AMPS)

Physical Specifications

Materials	Body : Ceramic Substrate
	Terminations : Ag / Ni / Sn (100% Lead-free)
	Element Cover Coating : Lead-free Glass
Marking	On Fuse :
	None
	On Label :
	"bel", "C1S", "Current Rating", "Voltage Rating", "Interrupting Rating", " Appropriate Safety Logos" and " ", " "(China RoHS compliant).

Specifications subject to change without notice

bel POWER SOLUTIONS & PROTECTION
a bel group

Bel Fuse Inc.
206 Van Vorst Street
Jersey City, NJ 07302 USA

+1 201.432.0463
techhelp@belf.com
belfuse.com

© 2014 Bel Fuse, Inc.

Type C1S

Surface Mount Slow Blow Chip Fuse

HF Pb C1S Series - 1206 Size **RoHS 6 Compliant**

Average Time Current Curve

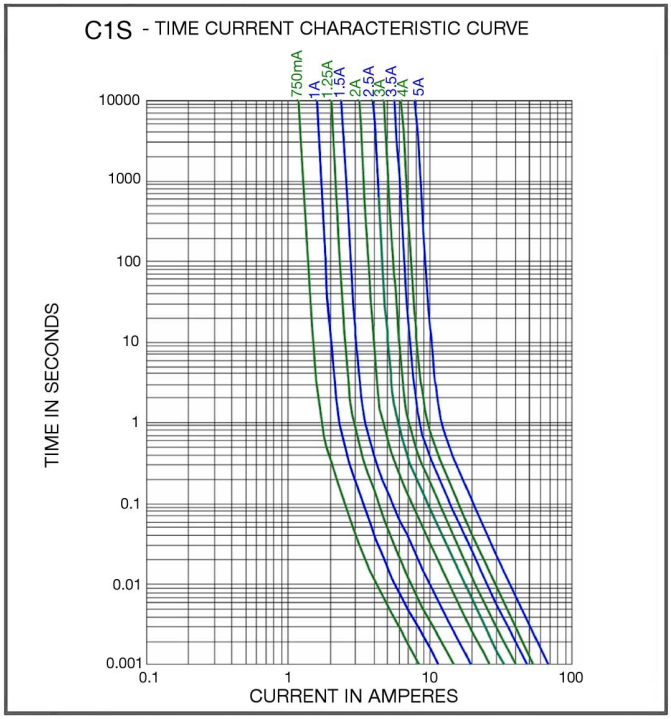

Temperature Derating Curve

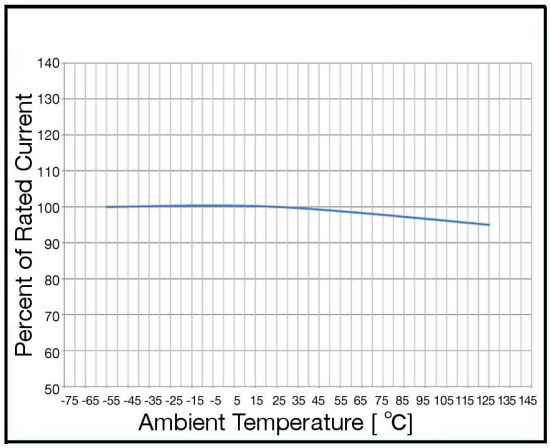

Electrical Specifications

Catalog Number	Ampere Rating (A)	Nominal Cold Resistance (ohm)	Nominal Volt-drop @100% In (Volt) max.	Voltage and Interrupting Ratings	Melting I^2T @10 In (A^2 Sec)	Nominal Power Dissipation @100% In (W)	Agency Approvals
							c UL us
C1S 750	750mA	0.350	0.333	See Table of Safety Approvals on Page 1 for Voltage and associated Interrupting Ratings	0.01	0.25	Y
C1S 1	1A	0.285	0.349		0.05	0.35	Y
C1S 1.25	1.25A	0.225	0.346		0.14	0.43	Y
C1S 1.5	1.5A	0.182	0.348		0.20	0.52	Y
C1S 2	2A	0.105	0.254		0.26	0.51	Y
C1S 2.5	2.5A	0.072	0.221		0.40	0.55	Y
C1S 3	3A	0.050	0.182		0.83	0.55	Y
C1S 3.5	3.5A	0.040	0.171		1.18	0.60	Y
C1S 4	4A	0.032	0.160		2.05	0.64	Y
C1S 5	5A	0.022	0.140		3.10	0.70	Y

Consult manufacturer for other ratings

Specifications subject to change without notice

bel POWER SOLUTIONS & PROTECTION
a bel group

Bel Fuse Inc.
206 Van Vorst Street
Jersey City, NJ 07302 USA

+1 201.432.0463
techhelp@belf.com
belfuse.com

© 2014 Bel Fuse, Inc.

Type C1S

Surface Mount Slow Blow Chip Fuse

HF Pb C1S Series - 1206 Size **RoHS 6 Compliant**

Environmental Specifications

Shock Resistance	MIL-STD-202G, Method 213B, Test Condition 1 (100 G's peak for 6 milliseconds; Sawtooth waveform)
Vibration Resistance	MIL-STD-202G, Method 201A(10-55 Hz,0.06 inch, total excursion).
Salt Spray Resistance	MIL-STD-202G, Method 101E, Test Condition B(48 hrs).
Insulation Resistance	MIL-STD-202G, Method 302, Test Condition A (After Opening) 10,000 ohms minimum.
Solderability	MIL-STD-202G, Method 208H
Resistance to solder Heat	MIL-STD-202G, Method 210F, Test Condition C. Top Side(260 °C, 20 sec) MIL-STD-202G, Method 210F, Test Condition D.Bottom Side(260 °C,10 sec)
Thermal Shock	MIL-STD-202G, Method 107G, Test Condition B (-65 °C to +125 °C).
Operating Temperature	-55 °C to +125 °C
Moisture Sensitivity Level	1 (According to IPC J-Std-020)

Soldering Parameters

IR Reflow Profile (IPC/JEDEC J-STD-020D)	
Preheat & Soak Temperature min (T_{smin}) Temperature max (T_{smax}) Time (T_{smin} to T_{smax}) (t_s)	 150 °C 200 °C 60 -120 seconds
Average ramp-up rate (T_{smax} to T_p)	3 °C/second max.
Liquidous temperature (T_L) Time at liquidous (t_L)	217 °C 60 - 150 seconds
Peak temperature (T_p)	260 °C max
Time (tp) within 5 °C of the specified classification temperture (T_c)	30 seconds
Average ramp-down rate (T_p to T_{smax})	6 °C/second max.
Time 25 °C to peak temperature	8 minutes max.

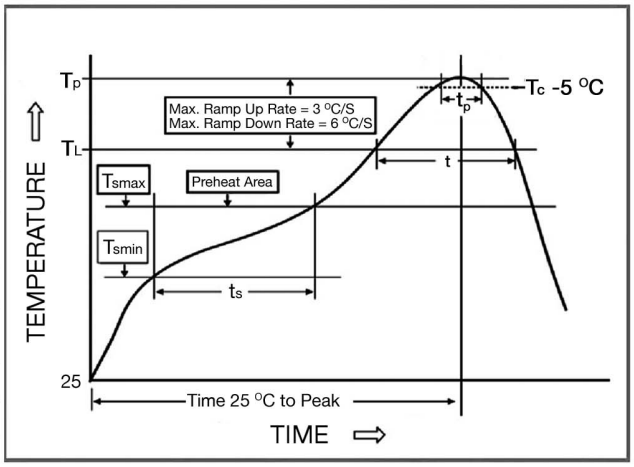

Lead-free Wave Soldering Profile	
Wave Soldering Parameter	
Average ramp-up rate	200 °C / second
Heating rate during preheat	typical 1 - 2 °C / second Max 4 °C / second
Final preheat temperature	within 125 °C of soldering temperature
Peak temperature Tp	260 °C
Time within +0 °C / -5 °C of actual peak temperature	10 seconds
Ramp-down rate	5 °C / second max.

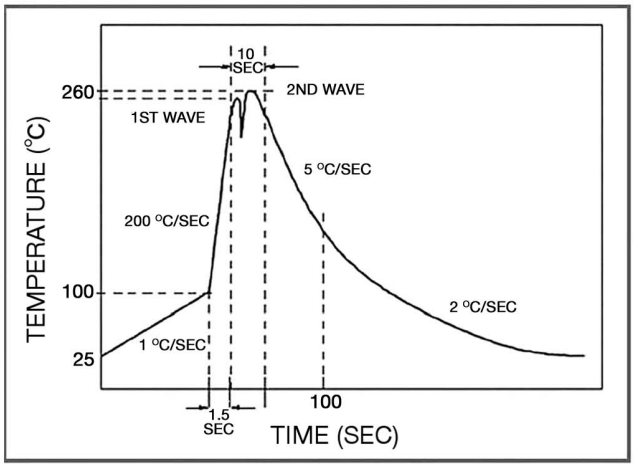

Specifications subject to change without notice

bel POWER SOLUTIONS & PROTECTION
a bel group

Bel Fuse Inc.
206 Van Vorst Street
Jersey City, NJ 07302 USA

+1 201.432.0463
techhelp@belf.com
belfuse.com

© 2014 Bel Fuse, Inc.

Type C1S

Surface Mount Slow Blow Chip Fuse

HF Pb C1S Series - 1206 Size **RoHS 6 Compliant**

Fuse FGNO Explanation
06XX X [XXXX] X XX, [XXXX]=Ampere Rating

Fraction	Decimal	Milliamps	Bel FGNO[XXXX]
1/32	0.032	32	0032
1/25	.040	40	0040
1/20	.050	50	0050
1/16	.063	63	0063
8/100	.080	80	0080
1/10	.100	100	0100
1/8	.125	125	0125
15/100	.150	150	0150
	.160	160	0160
2/10	.200	200	0200
1/4	.250	250	0250
3/10	.300	300	0300
	.315	315	0315
3/8	.375	375	0375
4/10	.400	400	0400
1/2	.500	500	0500
6/10	.600	600	0600
	.630	630	0630
7/10	.700	700	0700
3/4	.750	750	0750
8/10	.800	800	0800

Fraction	Decimal	Amps	Bel FGNO[XXXX]
	1.0	1	1000
1-1/4	1.25	1.25	1250
1-1/2	1.50	1.5	1500
	1.60	1.6	1600
	2.0	2	2000
2-1/4	2.25	2.25	2250
2-1/2	2.5	2.5	2500
	3.0	3	3000
	3.15	3.15	3150
3-1/2	3.5	3.5	3500
	4.0	4	4000
	5.0	5	5000
	6.0	6	6000
	6.3	6.3	6300
	7.0	7	7000
7-1/2	7.5	7.5	7500
	8.0	8	8000
		10	9100
		12	9120
		15	9150
		20	9200
		25	9250
		30	9300

Mechanical Dimensions

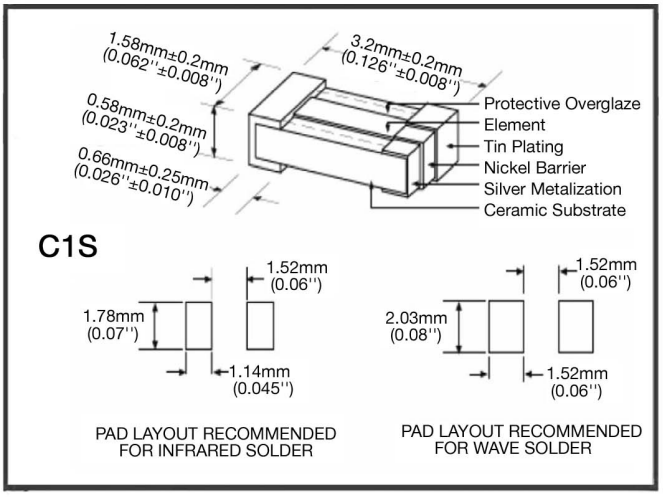

Ordering Information

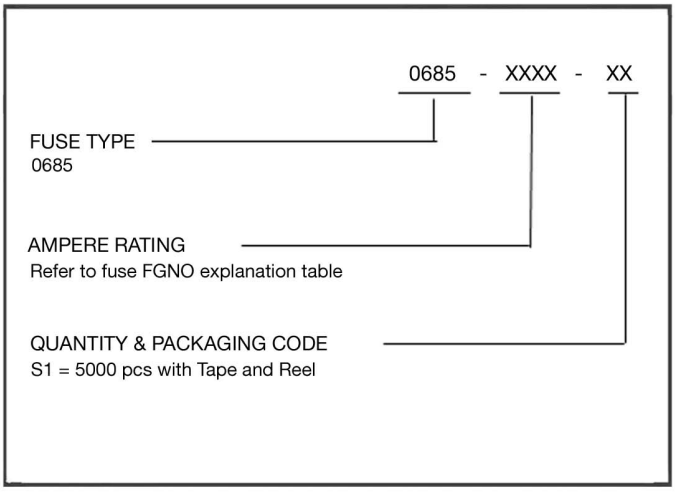

Packaging

Packaging Tape & Reel	Packaging Specification	Quantity	Quantity & Packaging Code
8 mm wide tape with 7 inches Diameter reel	EIA Standard 481-E	5000	0685-XXXX-S1

Specifications subject to change without notice

bel POWER SOLUTIONS & PROTECTION
a bel group

Bel Fuse Inc.
206 Van Vorst Street
Jersey City, NJ 07302 USA

+1 201.432.0463
techhelp@belf.com
belfuse.com

© 2014 Bel Fuse, Inc.