Excellent Integrated System Limited

Stocking Distributor

Click to view price, real time Inventory, Delivery & Lifecycle Information:

STMicroelectronics
STP9NK65Z

For any questions, you can email us directly:
sales@integrated-circuit.com

Distributor of STMicroelectronics: Excellent Integrated System Limited
Datasheet of STP9NK65Z - MOSFET N-CH 650V 6.4A TO-220
Contact us: sales@integrated-circuit.com Website: www.integrated-circuit.com

STP9NK65Z
STP9NK65ZFP

N-channel 650 V, 1 Ω, 6.4 A, TO-220, TO-220FP Zener-protected SuperMESH™ Power MOSFET

Features

Order codes	V_{DSS}	$R_{DS(on)}$ max.	I_D	Pw
STP9NK65Z	650 V	< 1.2 Ω	6.4 A	125 W
STP9NK65ZFP	650 V	< 1.2 Ω	6.4 A	30 W

- 100% avalanche tested
- Low input capacitance and gate charge
- Low gate input resistance
- Extremely high dv/dt and avalanche capabilities

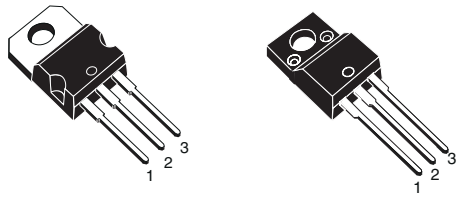

TO-220 TO-220FP

Applications

- Switching applications

Description

These devices are N-channel Zener-protected Power MOSFETs developed using STMicroelectronics' SuperMESH™ technology, achieved through optimization of ST's well established strip-based PowerMESH™ layout. In addition to a significant reduction in on-resistance, this device is designed to ensure a high level of dv/dt capability for the most demanding applications.

Figure 1. Internal schematic diagram

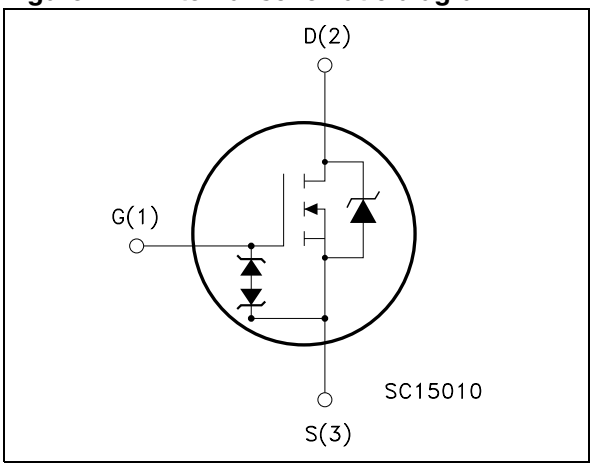

Table 1. Device summary

Order codes	Marking	Package	Packaging
STP9NK65Z	P9NK65Z	TO-220	Tube
STP9NK65ZFP	P9NK65ZFP	TO-220FP	Tube

Distributor of STMicroelectronics: Excellent Integrated System Limited
Datasheet of STP9NK65Z - MOSFET N-CH 650V 6.4A TO-220
Contact us: sales@integrated-circuit.com Website: www.integrated-circuit.com

Contents

1 Electrical ratings 3

2 Electrical characteristics 4

3 Test circuits 6

3.1 Electrical characteristics (curves) 7

4 Package mechanical data 10

5 Revision history 15

Distributor of STMicroelectronics: Excellent Integrated System Limited
Datasheet of STP9NK65Z - MOSFET N-CH 650V 6.4A TO-220
Contact us: sales@integrated-circuit.com Website: www.integrated-circuit.com

1 Electrical ratings

Table 2. Absolute maximum ratings

Symbol	Parameter	Value		Unit
		TO-220	TO-220FP	
V_{DS}	Drain-source voltage (V_{GS} = 0)	650		V
V_{GS}	Gate- source voltage	± 30		V
I_D	Drain current (continuous) at T_C = 25 °C	6.4	6.4 (1)	A
I_D	Drain current (continuous) at T_C = 100 °C	4	4(1)	A
I_{DM} (2)	Drain current (pulsed)	25.6	25.6 (1)	A
P_{TOT}	Total dissipation at T_C = 25 °C	125	30	W
	Derating factor	1	0.24	W/°C
$V_{ESD(G-S)}$	Gate source ESD(HBM-C=100 pF, R=1.5 kΩ)	4000		V
dv/dt (3)	Peak diode recovery voltage slope	4.5		V/ns
V_{ISO}	Insulation withstand voltage (DC)	-	2500	V
T_j T_{stg}	Operating junction temperature Storage temperature	-55 to 150 -55 to 150		°C °C

1. Limited only by maximum temperature allowed
2. Pulse width limited by safe operating area
3. $I_{SD} \leq 6.4$ A, di/dt $\leq$ 200 A/µs, $V_{DD} \leq 80\% V_{(BR)DSS}$

Table 3. Thermal data

Symbol	Parameter	Value		Unit
		TO-220	TO-220FP	
$R_{thj-case}$	Thermal resistance junction-case max	1	4.2	°C/W
$R_{thj-amb}$	Thermal resistance junction-ambient max	62.5		°C/W
T_l	Maximum lead temperature for soldering purpose	300		°C

Table 4. Avalanche characteristics

Symbol	Parameter	Value	Unit
I_{AR}	Avalanche current, repetitive or not-repetitive (pulse width limited by $T_{j\ max}$)	6.4	A
E_{AS}	Single pulse avalanche energy (starting T_j=25 °C, I_D=I_{AR}, V_{DD}=50 V)	200	mJ

Distributor of STMicroelectronics: Excellent Integrated System Limited
Datasheet of STP9NK65Z - MOSFET N-CH 650V 6.4A TO-220
Contact us: sales@integrated-circuit.com Website: www.integrated-circuit.com

2 Electrical characteristics

(T_{CASE}=25°C unless otherwise specified)

Table 5. On/off states

Symbol	Parameter	Test conditions	Min.	Typ.	Max.	Unit
$V_{(BR)DSS}$	Drain-source breakdown voltage (V_{GS} = 0)	I_D = 1 mA	650			V
I_{DSS}	Zero gate voltage drain current (V_{GS} = 0)	V_{DS} = 650 V V_{DS} = 650 V, @125 °C			1 50	µA µA
I_{GSS}	Gate-body leakage current (V_{DS} = 0)	V_{GS} = ± 20 V			±10	µA
$V_{GS(th)}$	Gate threshold voltage	V_{DS} = V_{GS}, I_D = 100 µA	3	3.75	4.5	V
$R_{DS(on)}$	Static drain-source on resistance	V_{GS} = 10 V, I_D = 3.2 A		1	1.2	Ω

Table 6. Dynamic

Symbol	Parameter	Test conditions	Min.	Typ.	Max.	Unit
g_{fs} (1)	Forward transconductance	V_{DS} = 15 V, I_D = 3.2 A	-	6	-	S
C_{iss} C_{oss} C_{rss}	Input capacitance Output capacitance Reverse transfer capacitance	V_{DS} = 25 V, f = 1 MHz, V_{GS} = 0	-	1145 130 28	-	pF pF pF
$C_{oss\ eq}$ (2).	Equivalent output capacitance	V_{GS} = 0, V_{DS} = 0 to 400 V	-	55	-	pF
Q_g Q_{gs} Q_{gd}	Total gate charge Gate-source charge Gate-drain charge	V_{DD} = 520 V, I_D = 6.4 A, V_{GS} = 10 V (see *Figure 3*)	-	41 7.5 22	-	nC nC nC

1. Pulsed: pulse duration=300µs, duty cycle 1.5%
2. $C_{oss\ eq.}$ is defined as a constant equivalent capacitance giving the same charging time as C_{oss} when V_{DS} increases from 0 to 80% V_{DSS}

Table 7. Switching times

Symbol	Parameter	Test conditions	Min.	Typ.	Max.	Unit
$t_{d(on)}$ t_r	Turn-on delay time Rise time	V_{DD} = 325 V, I_D = 3.2 A R_G = 4.7 Ω V_{GS} = 10 V (see *Figure 2*)	-	20 12	-	ns ns
$t_{d(off)}$ t_f	Turn-off delay time Fall time	V_{DD} = 325 V, I_D = 3.2 A R_G = 4.7 Ω V_{GS} = 10 V (See *Figure 2*)	-	45 15	-	ns ns

Distributor of STMicroelectronics: Excellent Integrated System Limited
Datasheet of STP9NK65Z - MOSFET N-CH 650V 6.4A TO-220
Contact us: sales@integrated-circuit.com Website: www.integrated-circuit.com

Table 8. Source drain diode

Symbol	Parameter	Test conditions	Min.	Typ.	Max.	Unit
I_{SD} I_{SDM} (1)	Source-drain current Source-drain current (pulsed)		-		6.4 25.6	A A
V_{SD} (2)	Forward on voltage	I_{SD} = 6.4 A, V_{GS} = 0	-		1.6	V
t_{rr} Q_{rr} I_{RRM}	Reverse recovery time Reverse recovery charge Reverse recovery current	I_{SD} = 6.4 A, di/dt = 100 A/µs V_{DD} = 50 V, T_j = 150 °C (see *Figure 4*)	-	400 2600 13		ns nC A

1. Pulse width limited by safe operating area.
2. Pulsed: Pulse duration = 300 µs, duty cycle 1.5%

Table 9. Gate-source zener diode

Symbol	Parameter	Test conditions	Min.	Typ.	Max.	Unit
BV_{GSO}(1)	Gate-source breakdown voltage	Igs=±1 mA (open drain)	30	-	-	V

1. The built-in back-to-back Zener diodes have specifically been designed to enhance not only the device's ESD capability, but also to make them safely absorb possible voltage transients that may occasionally be applied from gate to source. In this respect the Zener voltage is appropriate to achieve an efficient and cost-effective intervention to protect the device's integrity. These integrated Zener diodes thus avoid the usage of external components.

Distributor of STMicroelectronics: Excellent Integrated System Limited
Datasheet of STP9NK65Z - MOSFET N-CH 650V 6.4A TO-220
Contact us: sales@integrated-circuit.com Website: www.integrated-circuit.com

3 Test circuits

Figure 2. Switching times test circuit for resistive load

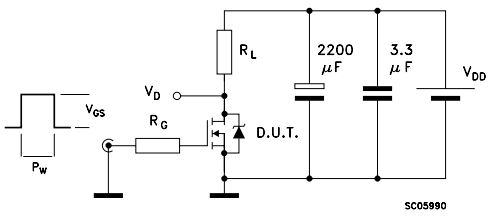

Figure 3. Gate charge test circuit

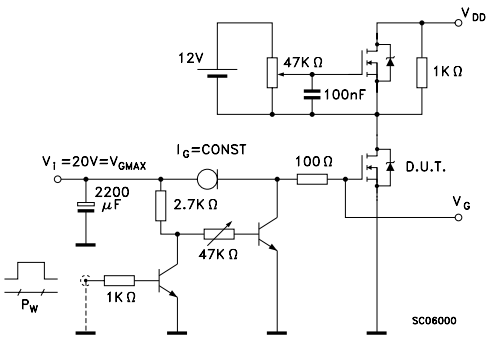

Figure 4. Test circuit for inductive load switching and diode recovery times

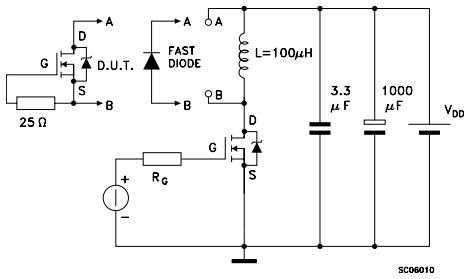

Figure 5. Unclamped Inductive load test circuit

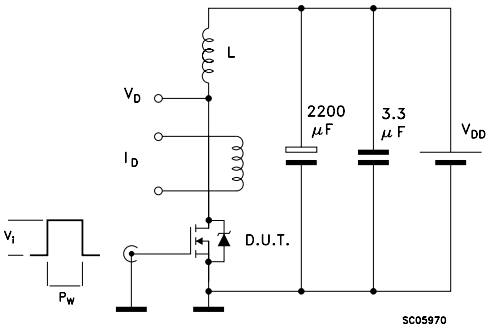

Figure 6. Unclamped inductive waveform

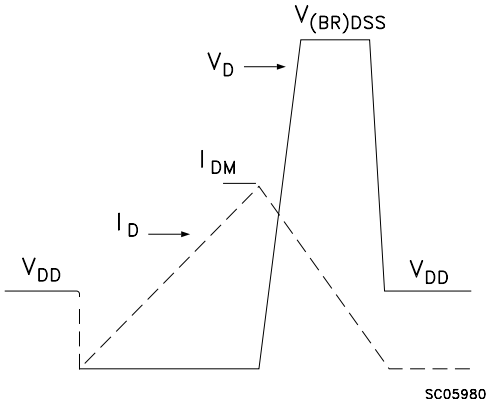

Figure 7. Switching time waveform

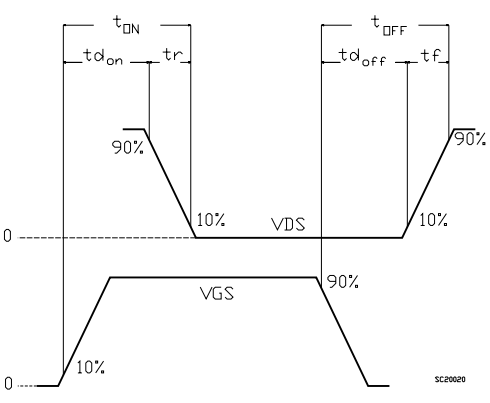

Distributor of STMicroelectronics: Excellent Integrated System Limited
Datasheet of STP9NK65Z - MOSFET N-CH 650V 6.4A TO-220
Contact us: sales@integrated-circuit.com Website: www.integrated-circuit.com

3.1 Electrical characteristics (curves)

Figure 8. Safe operating area for TO-220

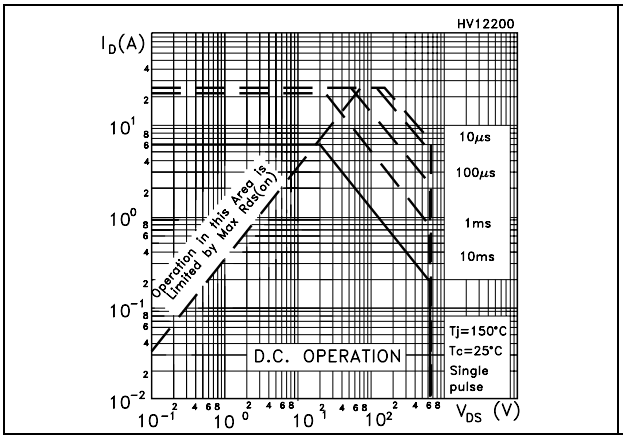

Figure 9. Thermal impedance for TO-220

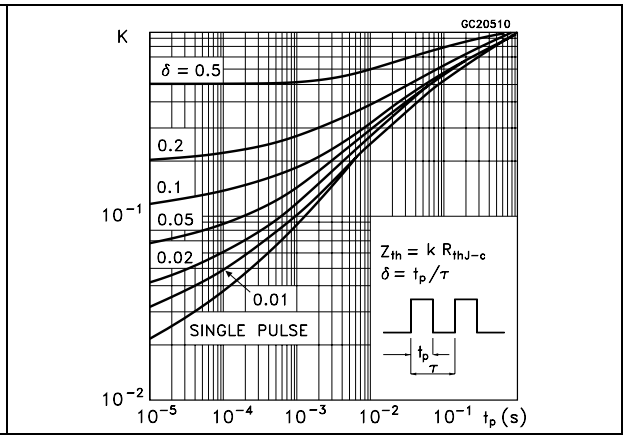

Figure 10. Safe operating area for TO-220FP

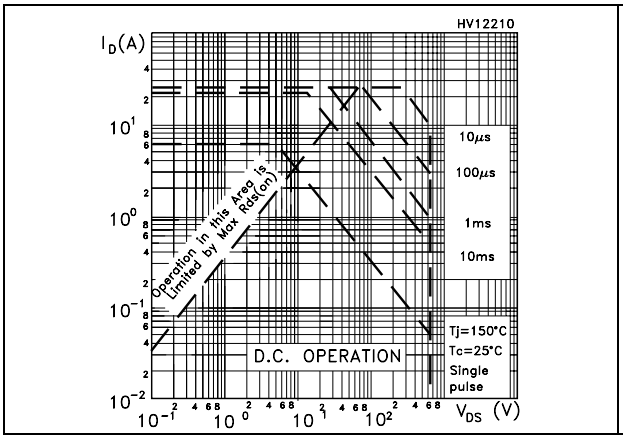

Figure 11. Thermal impedance for TO-220FP

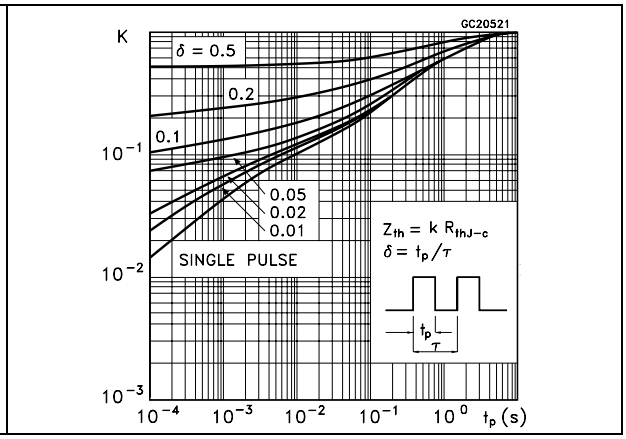

Figure 12. Output characteristics

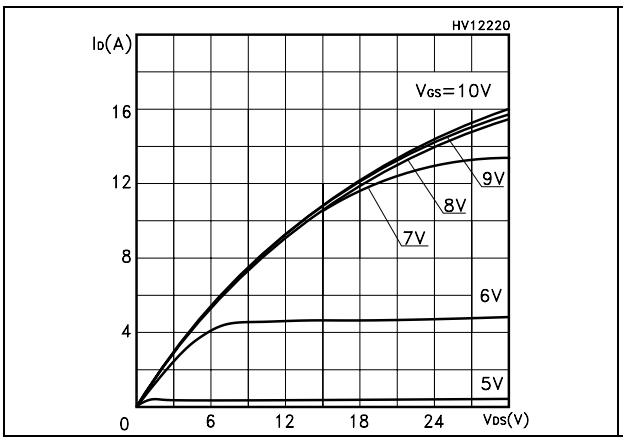

Figure 13. Transfer characteristics

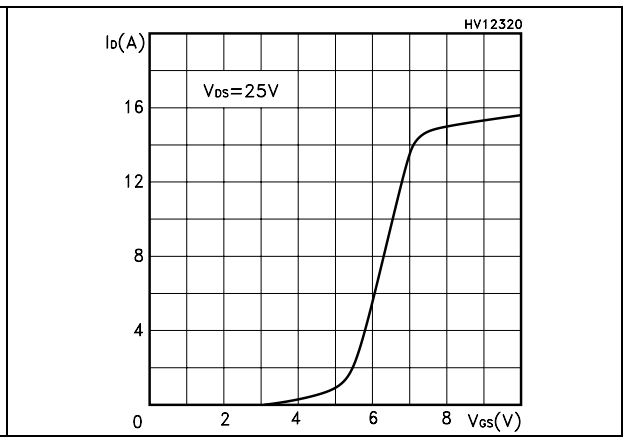

Distributor of STMicroelectronics: Excellent Integrated System Limited
Datasheet of STP9NK65Z - MOSFET N-CH 650V 6.4A TO-220
Contact us: sales@integrated-circuit.com Website: www.integrated-circuit.com

Figure 14. Transconductance

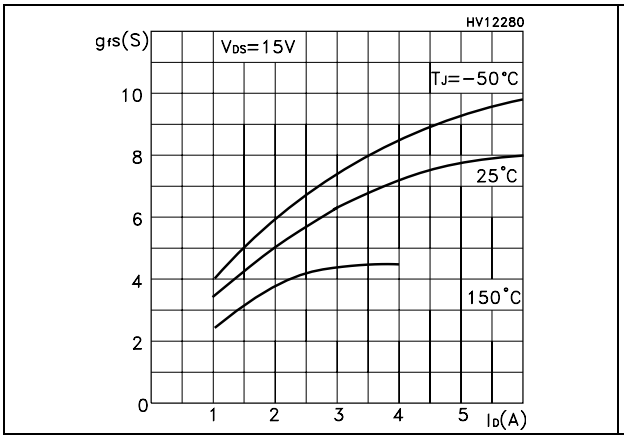

Figure 15. Static drain-source on resistance

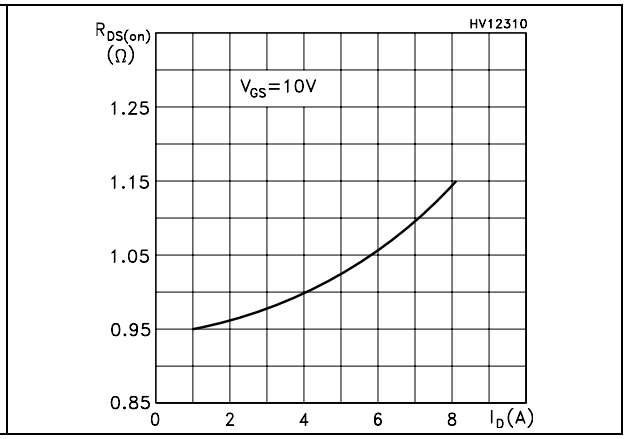

Figure 16. Gate charge vs gate-source voltage

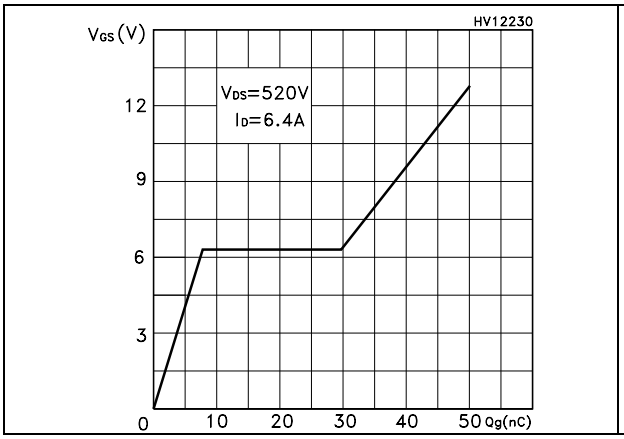

Figure 17. Capacitance variations

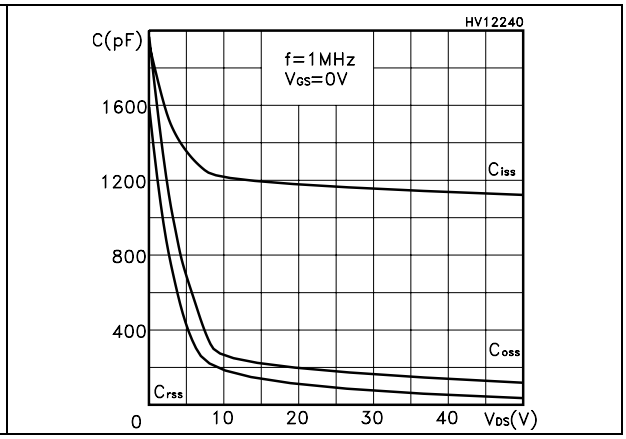

Figure 18. Normalized gate threshold voltage vs temperature

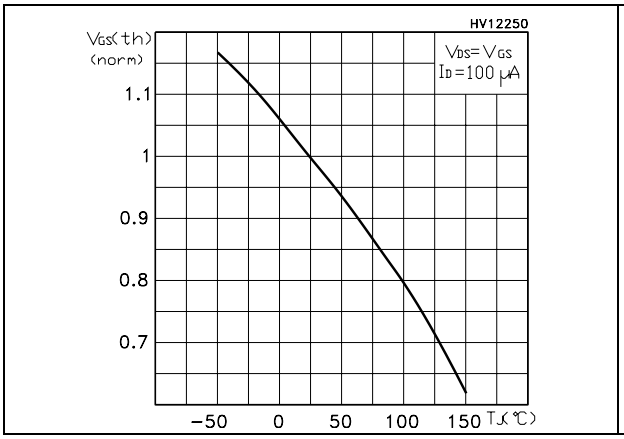

Figure 19. Normalized on resistance vs temperature

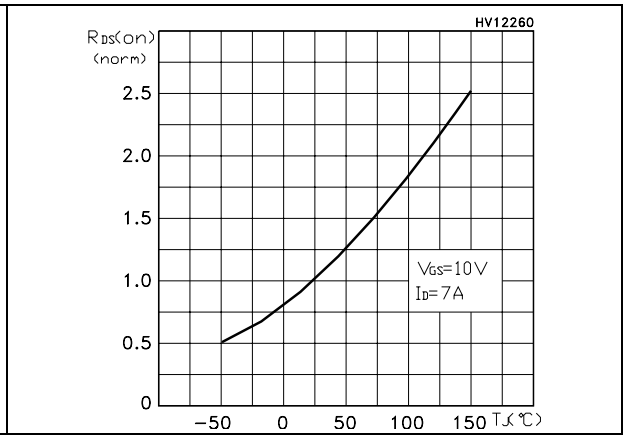

Distributor of STMicroelectronics: Excellent Integrated System Limited
Datasheet of STP9NK65Z - MOSFET N-CH 650V 6.4A TO-220
Contact us: sales@integrated-circuit.com Website: www.integrated-circuit.com

Figure 20. Source-drain diode forward characteristics

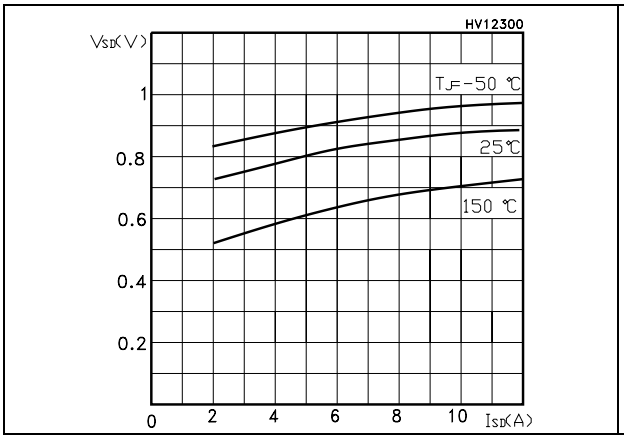

Figure 21. Normalized BV_{DSS} vs temperature

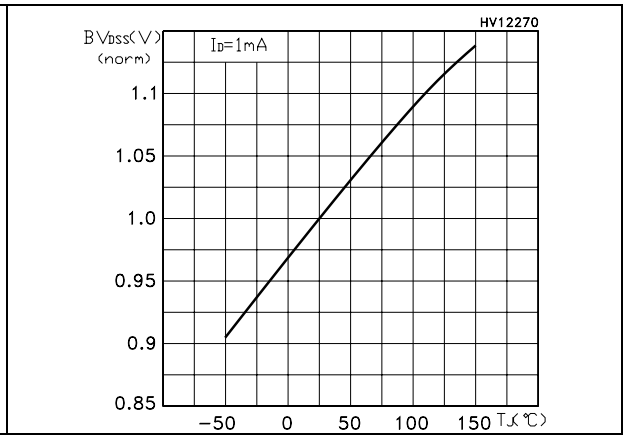

Figure 22. Maximum avalanche energy vs temperature

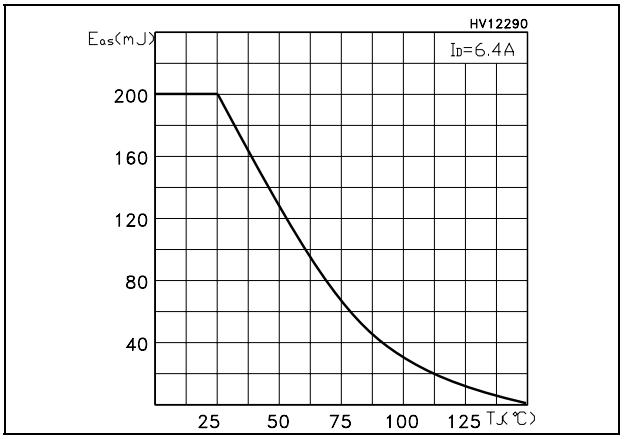

Distributor of STMicroelectronics: Excellent Integrated System Limited
Datasheet of STP9NK65Z - MOSFET N-CH 650V 6.4A TO-220
Contact us: sales@integrated-circuit.com Website: www.integrated-circuit.com

4 Package mechanical data

In order to meet environmental requirements, ST offers these devices in different grades of ECOPACK® packages, depending on their level of environmental compliance. ECOPACK® specifications, grade definitions and product status are available at: www.st.com. ECOPACK® is an ST trademark.

Distributor of STMicroelectronics: Excellent Integrated System Limited
Datasheet of STP9NK65Z - MOSFET N-CH 650V 6.4A TO-220
Contact us: sales@integrated-circuit.com Website: www.integrated-circuit.com

Table 10. TO-220 type A mechanical data

Dim.	mm		
	Min.	Typ.	Max.
A	4.40		4.60
b	0.61		0.88
b1	1.14		1.70
c	0.48		0.70
D	15.25		15.75
D1		1.27	
E	10		10.40
e	2.40		2.70
e1	4.95		5.15
F	1.23		1.32
H1	6.20		6.60
J1	2.40		2.72
L	13		14
L1	3.50		3.93
L20		16.40	
L30		28.90	
∅P	3.75		3.85
Q	2.65		2.95

Distributor of STMicroelectronics: Excellent Integrated System Limited
Datasheet of STP9NK65Z - MOSFET N-CH 650V 6.4A TO-220
Contact us: sales@integrated-circuit.com Website: www.integrated-circuit.com

Figure 23. TO-220 type A drawing

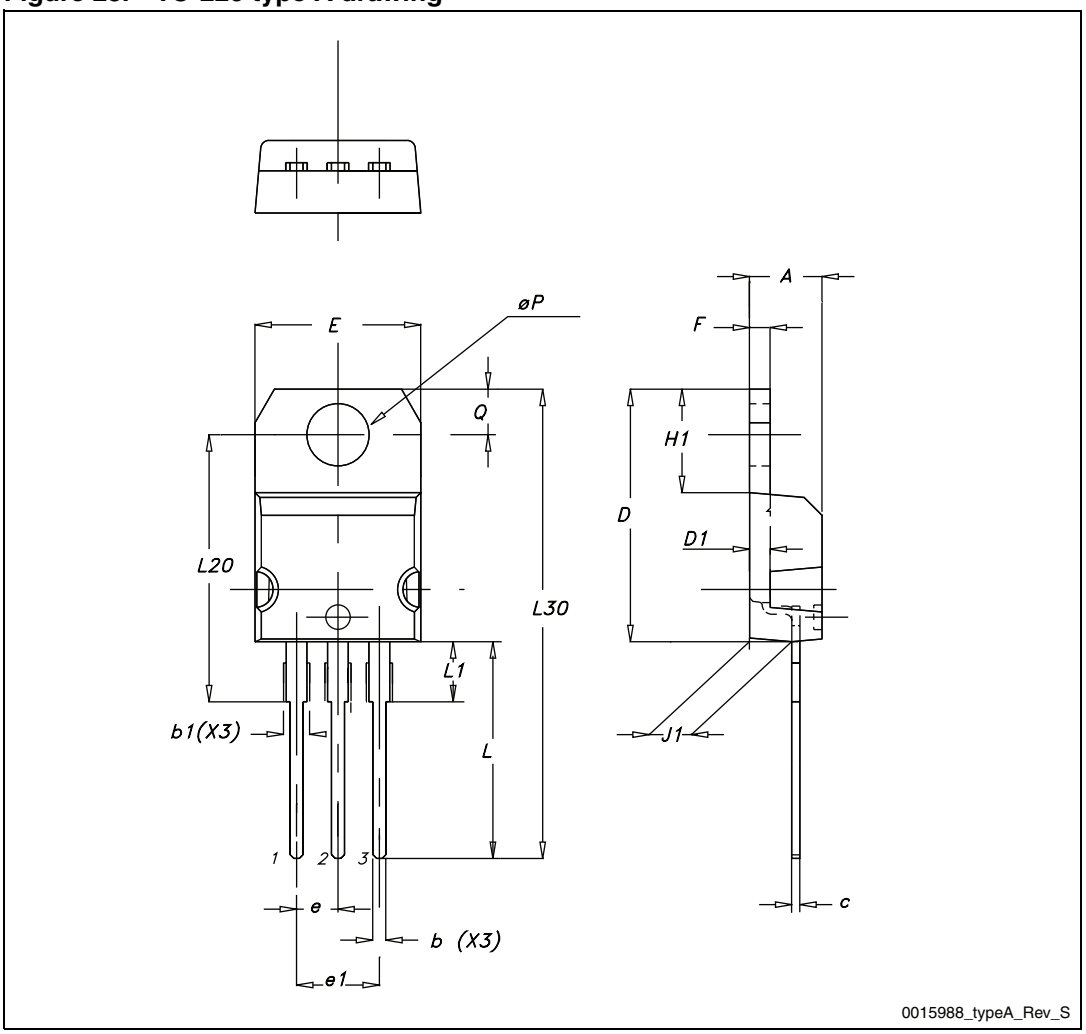

Distributor of STMicroelectronics: Excellent Integrated System Limited
Datasheet of STP9NK65Z - MOSFET N-CH 650V 6.4A TO-220
Contact us: sales@integrated-circuit.com Website: www.integrated-circuit.com

Table 11. TO-220FP mechanical data

Dim.	mm		
	Min.	Typ.	Max.
A	4.4		4.6
B	2.5		2.7
D	2.5		2.75
E	0.45		0.7
F	0.75		1
F1	1.15		1.70
F2	1.15		1.70
G	4.95		5.2
G1	2.4		2.7
H	10		10.4
L2		16	
L3	28.6		30.6
L4	9.8		10.6
L5	2.9		3.6
L6	15.9		16.4
L7	9		9.3
Dia	3		3.2

Distributor of STMicroelectronics: Excellent Integrated System Limited
Datasheet of STP9NK65Z - MOSFET N-CH 650V 6.4A TO-220
Contact us: sales@integrated-circuit.com Website: www.integrated-circuit.com

Figure 24. TO-220FP drawing

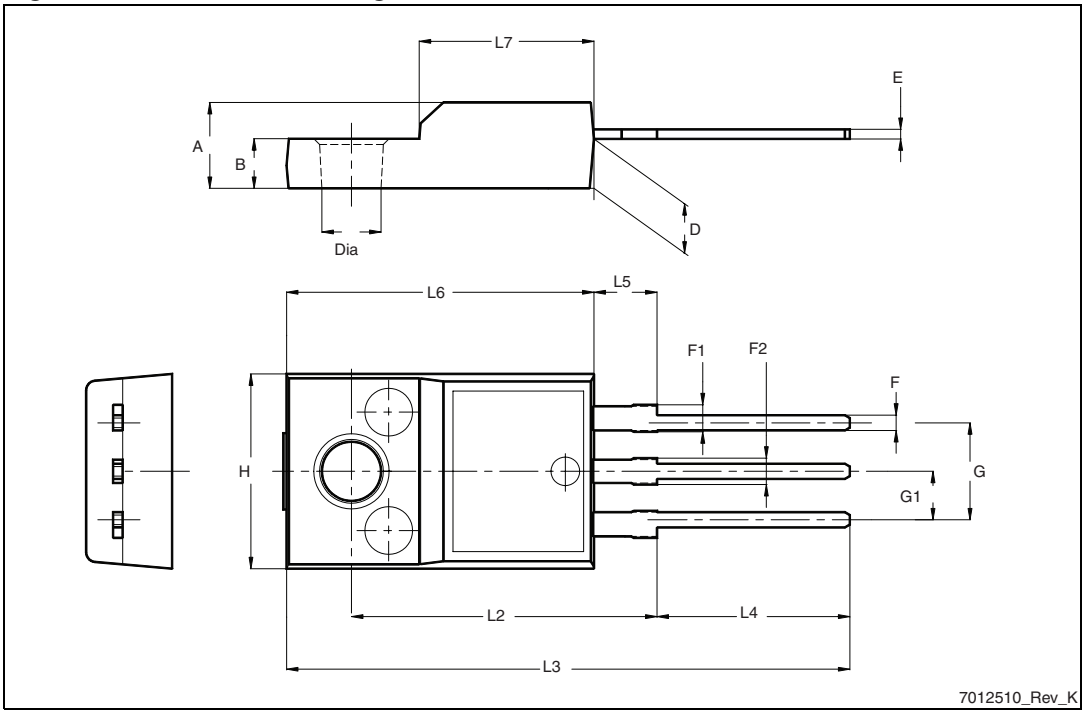

Distributor of STMicroelectronics: Excellent Integrated System Limited
Datasheet of STP9NK65Z - MOSFET N-CH 650V 6.4A TO-220
Contact us: sales@integrated-circuit.com Website: www.integrated-circuit.com

5 Revision history

Table 12. Document revision history

Date	Revision	Changes
11-Sep-2006	2	Complete version
19-Dec-2007	3	The document has been reformatted
26-Jan-2012	4	– Minor text changes – Modified: *Features* in cover page – Updated: *Section 4: Package mechanical data*

Distributor of STMicroelectronics: Excellent Integrated System Limited
Datasheet of STP9NK65Z - MOSFET N-CH 650V 6.4A TO-220
Contact us: sales@integrated-circuit.com Website: www.integrated-circuit.com

Please Read Carefully:

Information in this document is provided solely in connection with ST products. STMicroelectronics NV and its subsidiaries (“ST”) reserve the right to make changes, corrections, modifications or improvements, to this document, and the products and services described herein at any time, without notice.

All ST products are sold pursuant to ST’s terms and conditions of sale.

Purchasers are solely responsible for the choice, selection and use of the ST products and services described herein, and ST assumes no liability whatsoever relating to the choice, selection or use of the ST products and services described herein.

No license, express or implied, by estoppel or otherwise, to any intellectual property rights is granted under this document. If any part of this document refers to any third party products or services it shall not be deemed a license grant by ST for the use of such third party products or services, or any intellectual property contained therein or considered as a warranty covering the use in any manner whatsoever of such third party products or services or any intellectual property contained therein.

UNLESS OTHERWISE SET FORTH IN ST’S TERMS AND CONDITIONS OF SALE ST DISCLAIMS ANY EXPRESS OR IMPLIED WARRANTY WITH RESPECT TO THE USE AND/OR SALE OF ST PRODUCTS INCLUDING WITHOUT LIMITATION IMPLIED WARRANTIES OF MERCHANTABILITY, FITNESS FOR A PARTICULAR PURPOSE (AND THEIR EQUIVALENTS UNDER THE LAWS OF ANY JURISDICTION), OR INFRINGEMENT OF ANY PATENT, COPYRIGHT OR OTHER INTELLECTUAL PROPERTY RIGHT.

UNLESS EXPRESSLY APPROVED IN WRITING BY TWO AUTHORIZED ST REPRESENTATIVES, ST PRODUCTS ARE NOT RECOMMENDED, AUTHORIZED OR WARRANTED FOR USE IN MILITARY, AIR CRAFT, SPACE, LIFE SAVING, OR LIFE SUSTAINING APPLICATIONS, NOR IN PRODUCTS OR SYSTEMS WHERE FAILURE OR MALFUNCTION MAY RESULT IN PERSONAL INJURY, DEATH, OR SEVERE PROPERTY OR ENVIRONMENTAL DAMAGE. ST PRODUCTS WHICH ARE NOT SPECIFIED AS "AUTOMOTIVE GRADE" MAY ONLY BE USED IN AUTOMOTIVE APPLICATIONS AT USER’S OWN RISK.

Resale of ST products with provisions different from the statements and/or technical features set forth in this document shall immediately void any warranty granted by ST for the ST product or service described herein and shall not create or extend in any manner whatsoever, any liability of ST.

ST and the ST logo are trademarks or registered trademarks of ST in various countries.

Information in this document supersedes and replaces all information previously supplied.

The ST logo is a registered trademark of STMicroelectronics. All other names are the property of their respective owners.

© 2012 STMicroelectronics - All rights reserved

STMicroelectronics group of companies

Australia - Belgium - Brazil - Canada - China - Czech Republic - Finland - France - Germany - Hong Kong - India - Israel - Italy - Japan - Malaysia - Malta - Morocco - Philippines - Singapore - Spain - Sweden - Switzerland - United Kingdom - United States of America

www.st.com