Excellent Integrated System Limited

Stocking Distributor

Click to view price, real time Inventory, Delivery & Lifecycle Information:

Hirose Electric Co Ltd
DF16(2.5)-50DP-0.5V(86)

For any questions, you can email us directly:
sales@integrated-circuit.com

Distributor of Hirose Electric Co Ltd: Excellent Integrated System Limited
Datasheet of DF16(2.5)-50DP-0.5V(86) - HEADER 50POS 2.5MM .5MM DBL ROW
Contact us: sales@integrated-circuit.com Website: www.integrated-circuit.com
The product information in this catalog is for reference only. Please request the Engineering Drawing for the most current and accurate design information.
All non-RoHS products have been discontinued, or will be discontinued soon. Please check the products status on the Hirose website RoHS search at www.hirose-connectors.com, or contact your Hirose sales representative.

0.5mm Pitch SMT Board to Board Connector

DF16 Series

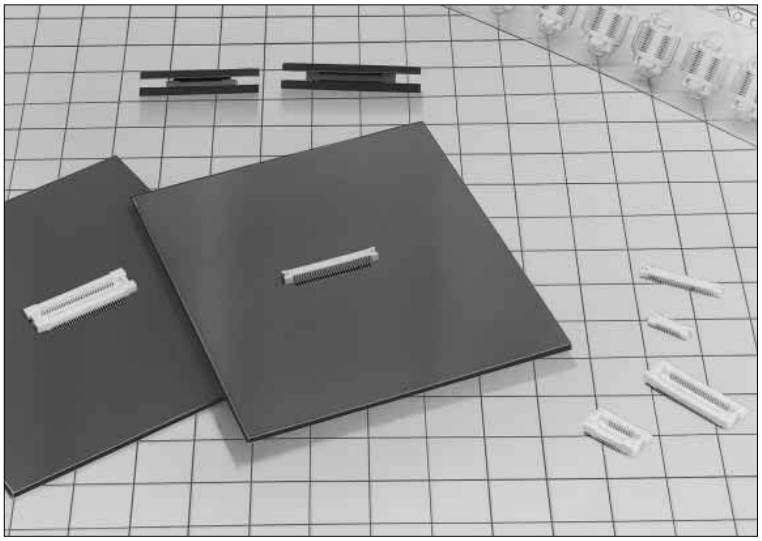

Correspond to Automatic Mounting

The vacuum pick-up area is prepared for automatic mounting machine.

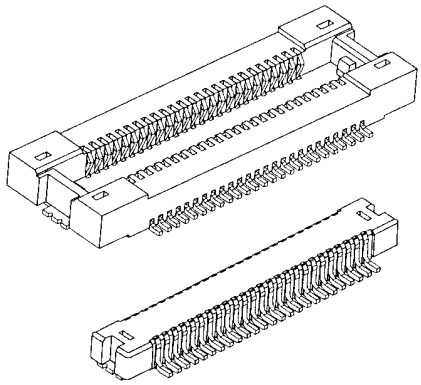

■Features

1. Miniaturizing and Slimming

In addition to 0.5mm pitch miniaturization, board to stacking height of 2mm and 2.5mm are prrovided.

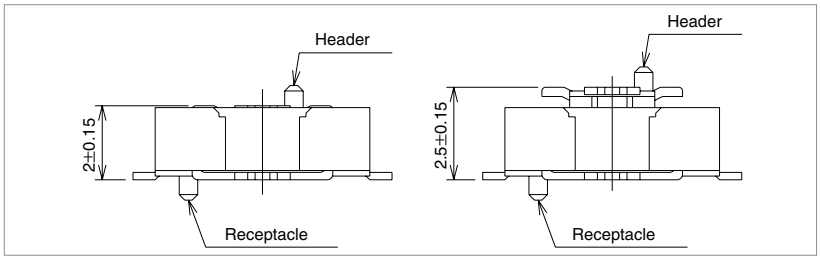

Receptacle commonly uses DF16#-∗DS-0.5V.

Header Product Name	Stacking Height
DF16#(2.0)-∗DP-0.5V	2.0mm
DF16#(2.5)-∗DP-0.5V	2.5mm

Note1: The stacking height doesn't include the solder paste thickness.

2. High Contact Reliability

The bellows female contact has a sufficient spring characteristic despite the low profile, and achieves high contact reliability.

3. Click Sensitivity in Mating

The click feeling is considered to facilitate insertion check when the connector is mated.

4. Metal Fitting Available

The metal fitting to prevent the solder peel is provided, considering the mounting on FPC.

5. Corresponding to Automatic Mounting

The connector has the vacuum pick-up area, and enables the automatic mounting with the embossed tape packaging.
Connector specification with no boss and no fitting is also.

■Applications

Mobile phone, LCD(Liquid Crystal Display), and so on

Distributor of Hirose Electric Co Ltd: Excellent Integrated System Limited
Datasheet of DF16(2.5)-50DP-0.5V(86) - HEADER 50POS 2.5MM .5MM DBL ROW
Contact us: sales@integrated-circuit.com Website: www.integrated-circuit.com
The product information in this catalog is for reference only. Please request the Engineering Drawing for the most current and accurate design information.
All non-RoHS products have been discontinued, or will be discontinued soon. Please check the products status on the Hirose website RoHS search at www.hirose-connectors.com, or contact your Hirose sales representative.

■Product Specifications

Rating	Current rating : 0.3A Voltage rating : 50V AC	Operating Temperature Range : –35 to +85℃ (Note 1) Operating Humidity Range : 40 to 80%	Storage Temperature Range : –10 to +60℃ (Note 2) Storage Humidity Range : 40 to 70% (Note 2)

Item	Specification	Condition
1. Insulation Resistance	500M ohms min	100V DC
2. Withstanding voltage	No flashover or insulation breakdown.	150V AC/1 minute
3. Contact Resistance	50m ohms max	100mA
4. Vibration	No electrical discontinuity of 1μs or more	Frequency: 10 to 55 Hz, single amplitude of 0.75 mm, 2 hours in each of the 3 directions.
5. Humidity (Steady state)	Contact resistance: 50m ohms max.Insulation resistance:250M ohms min.	96 hours at temperature of 40℃ and humidity of 90% to 95%
6. Temperature Cycle	Contact resistance: 50m ohms max.:Insulation resistance: 500M ohms min.	(-55℃: 30 minutes 5 to 35℃: 10 minutes 85℃: 30 minutes 5 to 35℃: 10 minutes) 5 cycles
7. Durability (Mating/un-mating)	Contact resistance: 50m ohms max	50cycle
8. Resistance to Soldering heat	No deformation of components affecting performance.	Reflow: At the recommended temperature profile
		Manual soldering: 350℃ for 3 seconds

Note 1: Includes temperature rise caused by current flow.
Note 2: The term "storage" refers to products stored for long period of time prior to mounting and use. Operating Temperature Range and Humidity range covers non conducting condition of installed connectors in storage, shipment or during transportation.
Note 3: Information contained in this catalog represents general requirements for this Series. Contact us for the drawings and specifications for a specific part number shown.

■Material

Product	Part	Material	Treatment	UL Standard
Receptacle	Insulator	Polyamide	White Beige (Natural)	UL94V-0
	Contact	Phosphor copper	Gold plated	————
	Metal fitting	Brass	Tin plated	————
Header	Insulator	Polyamide	White Beige (Natural)	UL94V-0
	Contact	Phosphor copper	Gold plated	————
	Metal fitting	Brass	Tin plated	————

■Ordering Information

●Receptacle/Header

DF16 # (**) - * DS - 0.5 V (**)
❶ ❷ ❸ ❹ ❺ ❻ ❼ ❽

❶ Series Name : DF16

❷ Type

	Fitting	Boss
Blank	○	○
B	○	×

❸ Product height
Receptacle : None
Header : 2.0, 2.5

❹ Number of Contacts
14, 16, 20, 30, 34, 40, 50, 60, 80 (Note1)

❺ Connector Type
DS : Double-row receptacle
DP : Double-row header

❻ Contact Pitch
: 0.5mm

❼ Contact Type
V : Straight SMT

❽ Pakaging Type
(86) : Gold plating, embossed tape packaging

Note1: For the 14, 16 and 80 contacts connector, the stacking height 2.0mm product only is available.
For the 34 contacts connectors, the stacking height of 2.5mm product only is available.

Distributor of Hirose Electric Co Ltd: Excellent Integrated System Limited
Datasheet of DF16(2.5)-50DP-0.5V(86) - HEADER 50POS 2.5MM .5MM DBL ROW
Contact us: sales@integrated-circuit.com Website: www.integrated-circuit.com
Electronic components

The product information in this catalog is for reference only. Please request the Engineering Drawing for the most current and accurate design information.
All non-RoHS products have been discontinued, or will be discontinued soon. Please check the products status on the Hirose website RoHS search at www.hirose-connectors.com, or contact your Hirose sales representative.

■Receptacle With metal fitting

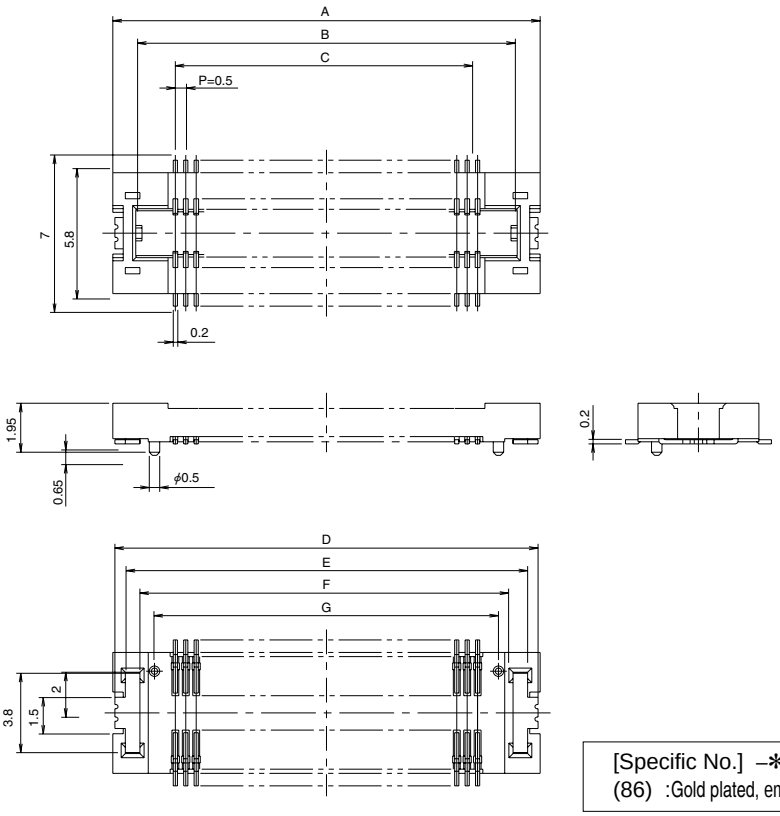

[Specific No.] –＊＊, (＊＊)
(86) :Gold plated, embossed tape packaging

●Receptacle with metal fitting, with boss

Unit: mm

Part Number	CL No.	Number of Contacts	A	B	C	D	E	F	G	RoHS
DF16-14DS-0.5V(86)	679-0010-1-86	14	9.0	6.8	3.0	8.8	7.8	6.4	5.0	YES
DF16-16DS-0.5V(86)	679-0001-0-86	16	9.5	7.3	3.5	9.3	8.3	6.9	5.5	
DF16-20DS-0.5V(86)	679-0002-3-86	20	10.5	8.3	4.5	10.3	9.3	7.9	6.5	
DF16-30DS-0.5V(86)	679-0003-6-86	30	13.0	10.8	7.0	12.8	11.8	10.4	9.0	
DF16-34DS-0.5V(86)	679-0009-2-86	34	14.0	11.8	8.0	13.8	12.8	11.4	10.0	
DF16-40DS-0.5V(86)	679-0004-9-86	40	15.5	13.3	9.5	15.3	14.3	12.9	11.5	
DF16-50DS-0.5V(86)	679-0005-1-86	50	18.0	15.8	12.0	17.8	16.8	15.4	14.0	
DF16-60DS-0.5V(86)	679-0006-4-86	60	20.5	18.3	14.5	20.3	19.3	17.9	16.5	
DF16-80DS-0.5V(86)	679-0008-0-86	80	25.5	23.3	19.5	25.3	24.3	22.9	21.5	

●Receptacle with metal fitting, without boss

Unit: mm

Part Number	CL No.	Number of Contacts	A	B	C	D	E	F	G	RoHS
DF16B-14DS-0.5V(86)	679-0030-9-86	14	9.0	6.8	3.0	8.8	7.8	6.4	——	YES
DF16B-16DS-0.5V(86)	679-0021-8-86	16	9.5	7.3	3.5	9.3	8.3	6.9	——	
DF16B-20DS-0.5V(86)	679-0022-0-86	20	10.5	8.3	4.5	10.3	9.3	7.9	——	
DF16B-30DS-0.5V(86)	679-0023-3-86	30	13.0	10.8	7.0	12.8	11.8	10.4	——	
DF16B-34DS-0.5V(86)	679-0029-0-86	34	14.0	11.8	8.0	13.8	12.8	11.4	——	
DF16B-40DS-0.5V(86)	679-0024-6-86	40	15.5	13.3	9.5	15.3	14.3	12.9	——	
DF16B-50DS-0.5V(86)	679-0025-9-86	50	18.0	15.8	12.0	17.8	16.8	15.4	——	
DF16B-60DS-0.5V(86)	679-0026-1-86	60	20.5	18.3	14.5	20.3	19.3	17.9	——	
DF16B-80DS-0.5V(86)	679-0028-7-86	80	25.5	23.3	19.5	25.3	24.3	22.9	——	

Distributor of Hirose Electric Co Ltd: Excellent Integrated System Limited
Datasheet of DF16(2.5)-50DP-0.5V(86) - HEADER 50POS 2.5MM .5MM DBL ROW
Contact us: sales@integrated-circuit.com Website: www.integrated-circuit.com
The product information in this catalog is for reference only. Please request the Engineering Drawing for the most current and accurate design information.
All non-RoHS products have been discontinued, or will be discontinued soon. Please check the products status on the Hirose website RoHS search at www.hirose-connectors.com, or contact your Hirose sales representative.

■Board to Board 2mm Header With metal fitting

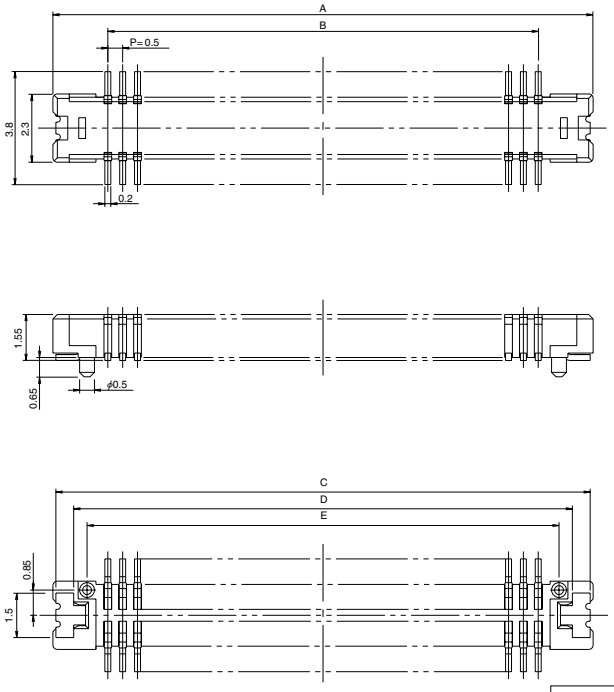

[Specific No.] –＊＊, (＊＊)
(86) :Gold plated, embossed tape packaging

●Board to Board 2mm Header with metal fitting, with boss

Unit: mm

Part Number	CL No.	Number of Contacts	A	B	C	D	E	RoHS
DF16(2.0)-14DP-0.5V(86)	679-0049-7-86	14	6.7	3.0	6.5	5.3	4.4	YES
DF16(2.0)-16DP-0.5V(86)	679-0041-5-86	16	7.2	3.5	7.0	5.8	4.9	
DF16(2.0)-20DP-0.5V(86)	679-0042-8-86	20	8.2	4.5	8.0	6.8	5.9	
DF16(2.0)-30DP-0.5V(86)	679-0043-0-86	30	10.7	7.0	10.5	9.3	8.4	
DF16(2.0)-40DP-0.5V(86)	679-0044-3-86	40	13.2	9.5	13.0	11.8	10.9	
DF16(2.0)-50DP-0.5V(86)	679-0045-6-86	50	15.7	12.0	15.5	14.3	13.4	
DF16(2.0)-60DP-0.5V(86)	679-0046-9-86	60	18.2	14.5	18.0	16.8	15.9	
DF16(2.0)-80DP-0.5V(86)	679-0048-4-86	80	23.2	19.5	23.0	21.8	20.9	

●Board to Board 2mm Header with metal fitting, without boss

Unit: mm

Part Number	CL No.	Number of Contacts	A	B	C	D	E	RoHS
DF16B(2.0)-14DP-0.5V(86)	679-0069-4-86	14	6.7	3.0	6.5	5.3	——	YES
DF16B(2.0)-16DP-0.5V(86)	679-0061-2-86	16	7.2	3.5	7.0	5.8	——	
DF16B(2.0)-20DP-0.5V(86)	679-0062-5-86	20	8.2	4.5	8.0	6.8	——	
DF16B(2.0)-30DP-0.5V(86)	679-0063-8-86	30	10.7	7.0	10.5	9.3	——	
DF16B(2.0)-40DP-0.5V(86)	679-0064-0-86	40	13.2	9.5	13.0	11.8	——	
DF16B(2.0)-50DP-0.5V(86)	679-0065-3-86	50	15.7	12.0	15.5	14.3	——	
DF16B(2.0)-60DP-0.5V(86)	679-0066-6-86	60	18.2	14.5	18.0	16.8	——	
DF16B(2.0)-80DP-0.5V(86)	679-0068-1-86	80	23.2	19.5	23.0	21.8	——	

Distributor of Hirose Electric Co Ltd: Excellent Integrated System Limited
Datasheet of DF16(2.5)-50DP-0.5V(86) - HEADER 50POS 2.5MM .5MM DBL ROW
Contact us: sales@integrated-circuit.com Website: www.integrated-circuit.com
The product information in this catalog is for reference only. Please request the Engineering Drawing for the most current and accurate design information.
All non-RoHS products have been discontinued, or will be discontinued soon. Please check the products status on the Hirose website RoHS search at www.hirose-connectors.com, or contact your Hirose sales representative.

■Board to Board 2.5mm Header With metal fitting

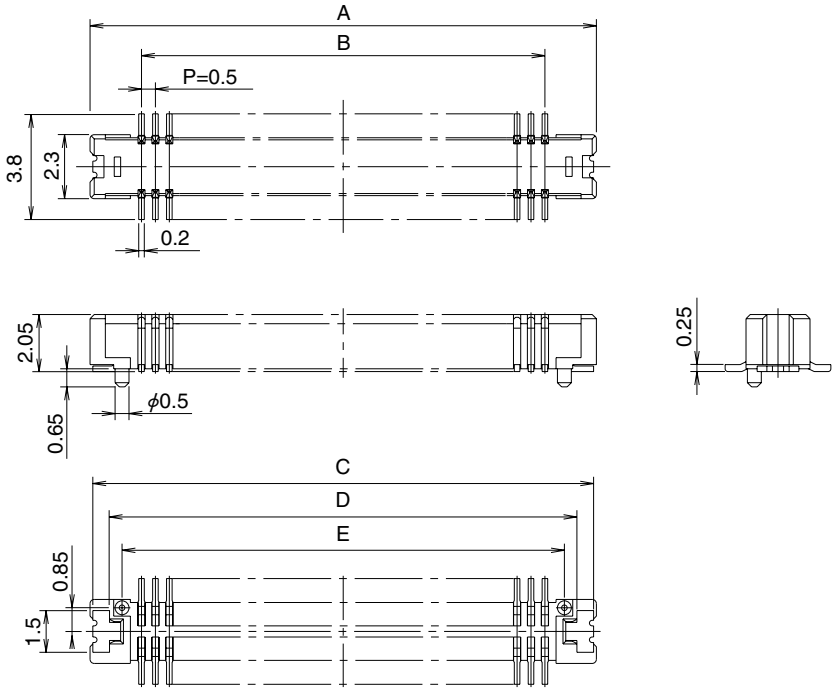

[Specific No.] –＊＊, (＊＊)
(86) :Gold plated, embossed tape packaging

●Board to Board 2.5mm Header with metal fitting, with boss

Unit: mm

Part Number	CL No.	Number of Contacts	A	B	C	D	E	RoHS
DF16(2.5)-20DP-0.5V(86)	679-0082-2-86	20	8.2	4.5	8.0	6.8	5.9	YES
DF16(2.5)-30DP-0.5V(86)	679-0083-5-86	30	10.7	7.0	10.5	9.3	8.4	
DF16(2.5)-34DP-0.5V(86)	679-0089-1-86	34	11.7	8.0	11.5	10.3	9.4	
DF16(2.5)-40DP-0.5V(86)	679-0084-8-86	40	13.2	9.5	13.0	11.8	10.9	
DF16(2.5)-50DP-0.5V(86)	679-0085-0-86	50	15.7	12.0	15.5	14.3	13.4	
DF16(2.5)-60DP-0.5V(86)	679-0086-3-86	60	18.2	14.5	18.0	16.8	15.9	

●Board to Board 2.5mm Header with metal fitting, without boss

Unit: mm

Part Number	CL No.	Number of Contacts	A	B	C	D	E	RoHS
DF16B(2.5)-20DP-0.5V(86)	679-0102-8-86	20	8.2	4.5	8.0	6.8	—	YES
DF16B(2.5)-30DP-0.5V(86)	679-0103-0-86	30	10.7	7.0	10.5	9.3	—	
DF16B(2.5)-34DP-0.5V(86)	679-0109-7-86	34	11.7	8.0	11.5	10.3	—	
DF16B(2.5)-40DP-0.5V(86)	679-0104-3-86	40	13.2	9.5	13.0	11.8	—	
DF16B(2.5)-50DP-0.5V(86)	679-0105-6-86	50	15.7	12.0	15.5	14.3	—	
DF16B(2.5)-60DP-0.5V(86)	679-0106-9-86	60	18.2	14.5	18.0	16.8	—	

Distributor of Hirose Electric Co Ltd: Excellent Integrated System Limited
Datasheet of DF16(2.5)-50DP-0.5V(86) - HEADER 50POS 2.5MM .5MM DBL ROW
Contact us: sales@integrated-circuit.com Website: www.integrated-circuit.com
The product information in this catalog is for reference only. Please request the Engineering Drawing for the most current and accurate design information.
All non-RoHS products have been discontinued, or will be discontinued soon. Please check the products status on the Hirose website RoHS search at www.hirose-connectors.com, or contact your Hirose sales representative.

■Recommended PCB mounting pattern

●Receptacle

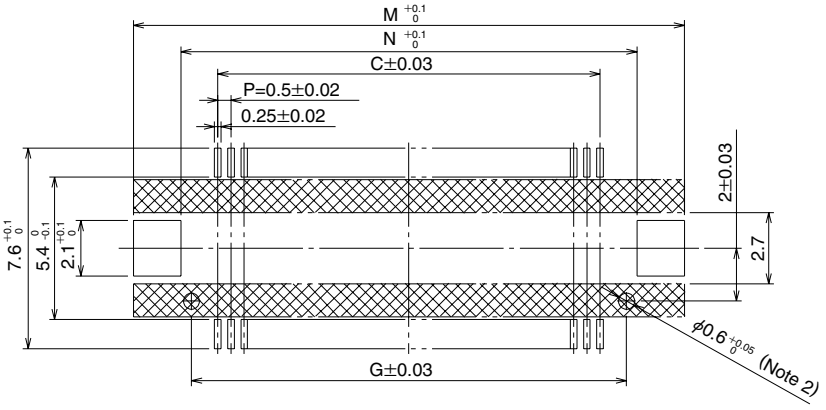

Note1: If the pattern is included in the shaded area, and is not treated with resist, it could touch the connector contact.
Note2: If the boss isn't included, the boss hole shown in the above isn't required.

Number of Contacts	C	G	M	N
14	3.0	5.0	9.4	5.8
16	3.5	5.5	9.9	6.3
20	4.5	6.5	10.9	7.3
30	7.0	9.0	13.4	9.8
34	8.0	10.0	14.4	10.8
40	9.5	11.5	15.9	12.3
50	12.0	14.0	18.4	14.8
60	14.5	16.5	20.9	17.3
80	19.5	21.5	25.9	22.3

●Header (Board to Board 2.0, 2.5mm)

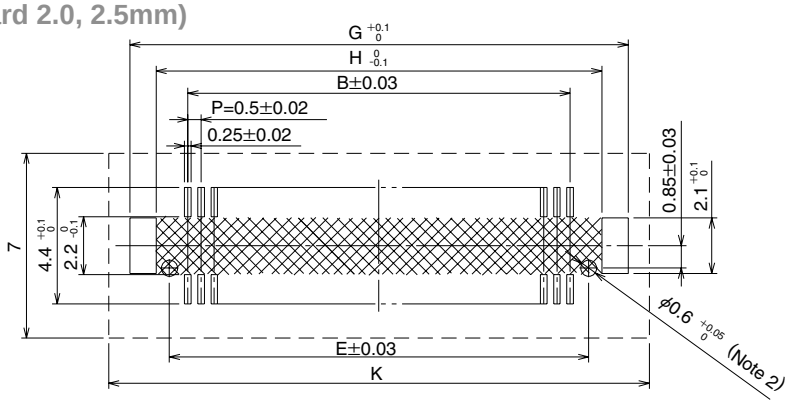

Note1: If the pattern is included in the shaded area, and is not treated with resist, it could touch the connector contact .
Note2: If the boss isn't included, the boss hole shown in the above isn't required.
Note3: Don't install any part in the shaded area. If installed, the connectors can't be mated with each other.

Number of Contacts	B	E	G	H	K
14	3.0	4.4	7.4	5.4	9.0
16	3.5	4.9	7.9	5.9	9.5
20	4.5	5.9	8.9	6.9	10.5
30	7.0	8.4	11.4	9.4	13.0
34	8.0	9.4	12.4	10.4	14.0
40	9.5	10.9	13.9	11.9	15.5
50	12.0	13.4	16.4	14.4	18.0
60	14.5	15.9	18.9	16.9	20.5
80	19.5	20.9	23.9	21.9	25.5

Distributor of Hirose Electric Co Ltd: Excellent Integrated System Limited
Datasheet of DF16(2.5)-50DP-0.5V(86) - HEADER 50POS 2.5MM .5MM DBL ROW
Contact us: sales@integrated-circuit.com Website: www.integrated-circuit.com
The product information in this catalog is for reference only. Please request the Engineering Drawing for the most current and accurate design information.
All non-RoHS products have been discontinued, or will be discontinued soon. Please check the products status on the Hirose website RoHS search at www.hirose-connectors.com, or contact your Hirose sales representative.

■Embossed Carrier Tape Dimensions

●Receptacle

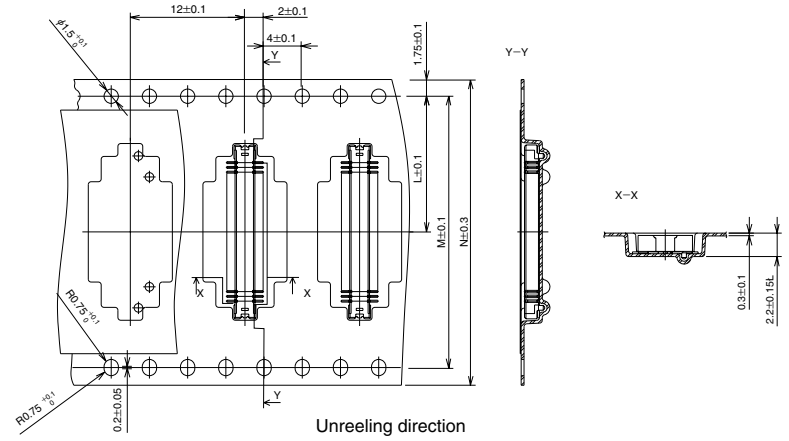

●Reel Dimensions

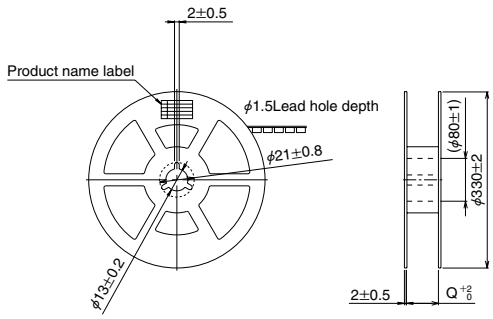

●Header

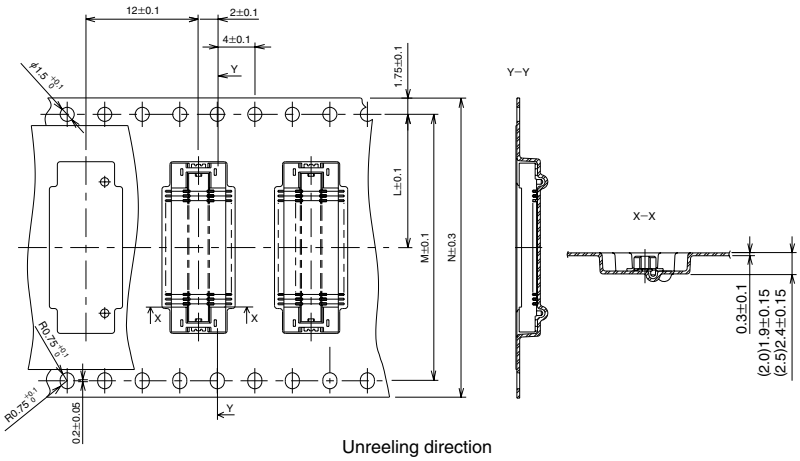

●Reel Dimensions

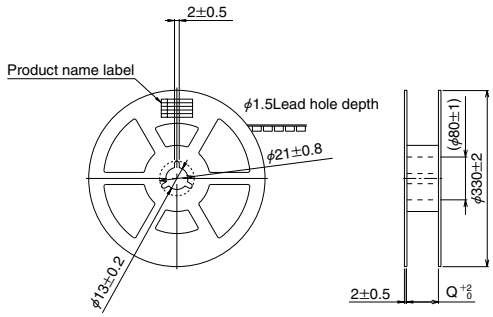

Product Name	N	M	L	Q
DF16#-14DS-0.5V	24.0	—	11.5	24.4
DF16#-16DS-0.5V	24.0	—	11.5	24.4
DF16#-20DS-0.5V	24.0	—	11.5	24.4
DF16#-30DS-0.5V	24.0	—	11.5	24.4
DF16#-34DS-0.5V	24.0	—	11.5	24.4
DF16#-40DS-0.5V	32.0	28.4	14.2	32.4
DF16#-50DS-0.5V	32.0	28.4	14.2	32.4
DF16#-60DS-0.5V	32.0	28.4	14.2	32.4
DF16#-80DS-0.5V	44.0	40.4	20.2	44.4
DF16#(2.0)-14DP-0.5V	16.0	—	7.5	16.4
DF16#(2.0)-16DP-0.5V	16.0	—	7.5	16.4
DF16#(2.0)-34DP-0.5V	24.0	—	11.5	24.4
DF16#(2.0/2.5)-20DP-0.5V	16.0	—	7.5	16.4
DF16#(2.0/2.5)-30DP-0.5V	24.0	—	11.5	24.4
DF16#(2.0/2.5)-40DP-0.5V	24.0	—	11.5	24.4
DF16#(2.0/2.5)-50DP-0.5V	24.0	—	11.5	24.4
DF16#(2.0/2.5)-60DP-0.5V	32.0	28.4	14.2	32.4
DF16#(2.0/2.5)-80DP-0.5V	44.0	40.4	20.2	44.4

Distributor of Hirose Electric Co Ltd: Excellent Integrated System Limited
Datasheet of DF16(2.5)-50DP-0.5V(86) - HEADER 50POS 2.5MM .5MM DBL ROW
Contact us: sales@integrated-circuit.com Website: www.integrated-circuit.com
Electronic components
The product information in this catalog is for reference only. Please request the Engineering Drawing for the most current and accurate design information.
All non-RoHS products have been discontinued, or will be discontinued soon. Please check the products status on the Hirose website RoHS search at www.hirose-connectors.com, or contact your Hirose sales representative.

Precautions

1. Recommended Temperature Profile (SMT)	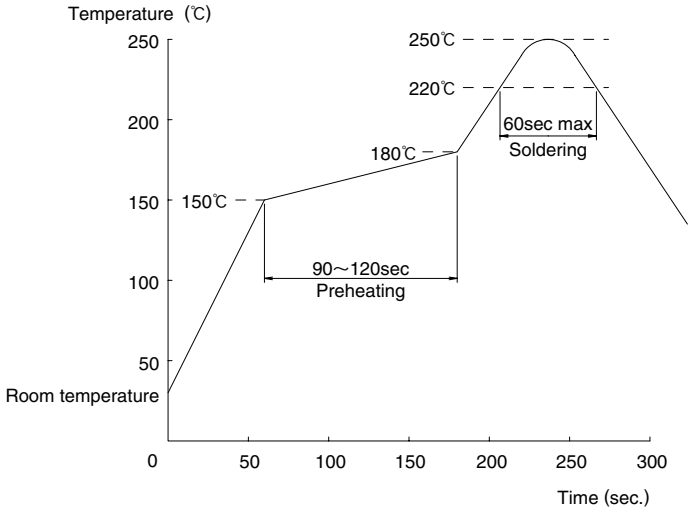 Note1: Up to 2 cycles of Reflow soldering are possible under the same conditions, provided that there is a return to normal temperature between the first and second cycle. Note2: The temperature profile indicates the board surface temperature at the point of contacts with the connector terminals. Note3: Environment for header is room air only.
2. Recommended Manual Soldering Condition (SMT)	Soldering iron temperature: 350, Soldering time: Within 3 seconds
3. Recommended Screen Thickness (SMT)	0.15mm
4. Board Warp (SMT)	Maximum 0.02mm in the connector center area, based on the both connector edges
5. Cleaning Condition	Refer to the "Nylon Connector Use Hand book".
6. Cautions	■The header is designed in a structure where contacts are exposed. Touching it with bare hands would cause contact failure or electrostatic element damage. ■Where no board is mounted, the insertion or extraction will cause damage or contact deformation. ■Avoid retaining the board with the connector only, and fix the board by any other means than the connector. ■Excessive scoop insertion or extraction may result in damage. ■In the manual soldering process, don't carry out flux coating which will cause a flux blister on the connector. ■The color phase of this product may be slightly different from that of the formed product according to the manufacturing lot. However, the difference doesn't affect the performance.