Excellent Integrated System Limited

Stocking Distributor

Click to view price, real time Inventory, Delivery & Lifecycle Information:

ASSMANN WSW Components
A-HDS44PP-WP

For any questions, you can email us directly:
sales@integrated-circuit.com

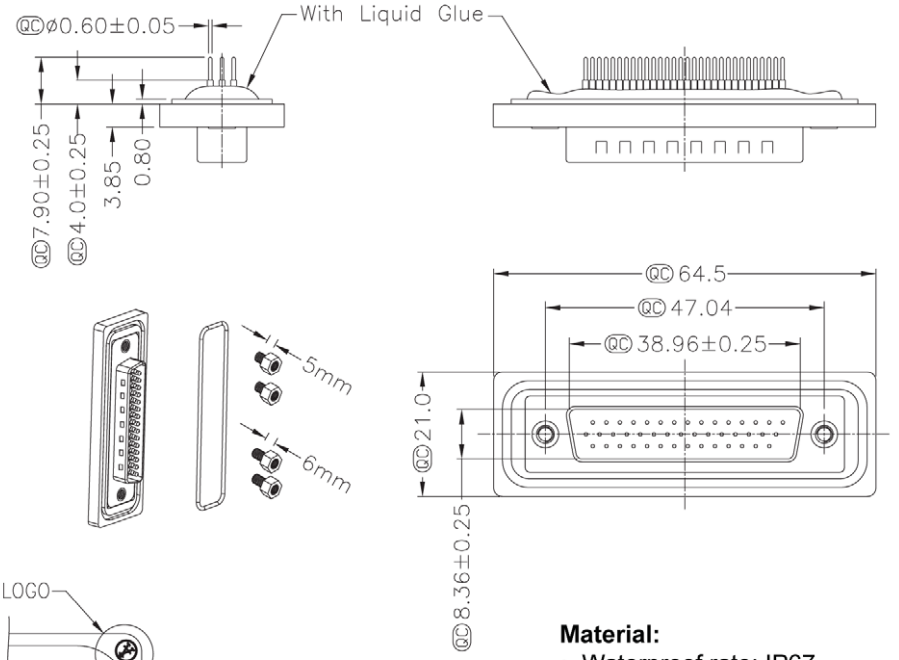

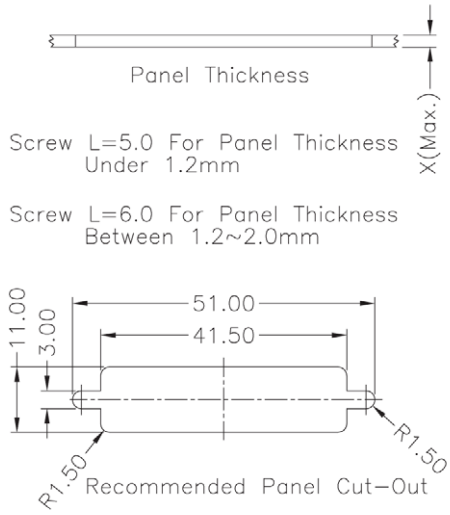

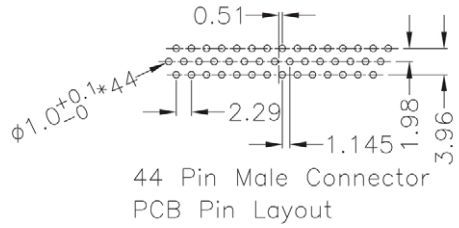

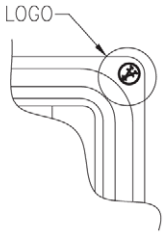

Material:
- Waterproof rate: IP67
- Connector: Black, Nylon+GF
- Pin: Copper alloy, Gold plated

Unit: mm

RoHS Compliant

Scale	Free
TOLERANCE	
X.X	±0.25
X.XX	±0.10
X.XXX	±0.05
DIM	TOL
X.°	±1°
X.X°	±X°
Angle	TOL

Id.	Modification	Date	Name

	Date	Name
Drawn	30.11.11	Chappell
Approved		

ASSMANN WSW components
1840 W. Drake Drive, Suite 101 • Tempe, AZ 85283
Toll Free: 1-877-277-6266 • Email: info@assmann.us

Title: Waterproof DSub connector High Density, Straight 44 pin, Male

ASSMANN WSW-No.: A-HDS44PP-WP

Drawing-No.: rev00

Replace

Sheet: 1/1