ITEM NO.	PART NUMBER	DESCRIPTION	QTY.	COMPONENT NOTES
1	50-00351	Connector, dc plug, 5.5x2.5xL25.0 mm, brass, nickel plated, molding style, spring contacts	1	
2	50-00027	Connector, dc jack, 5.5x2.5xL17.4 mm, molding style	1	
3	30-00007	Wire, 2C BC, 18 AWG, UL2468, 300V, 80C, 4.4 mm, VW-1, PVC, 87A	1	
4	24-00072	Overmold, PVC, black	1	
5	24-00054	Ovemold, PVC, black	1	

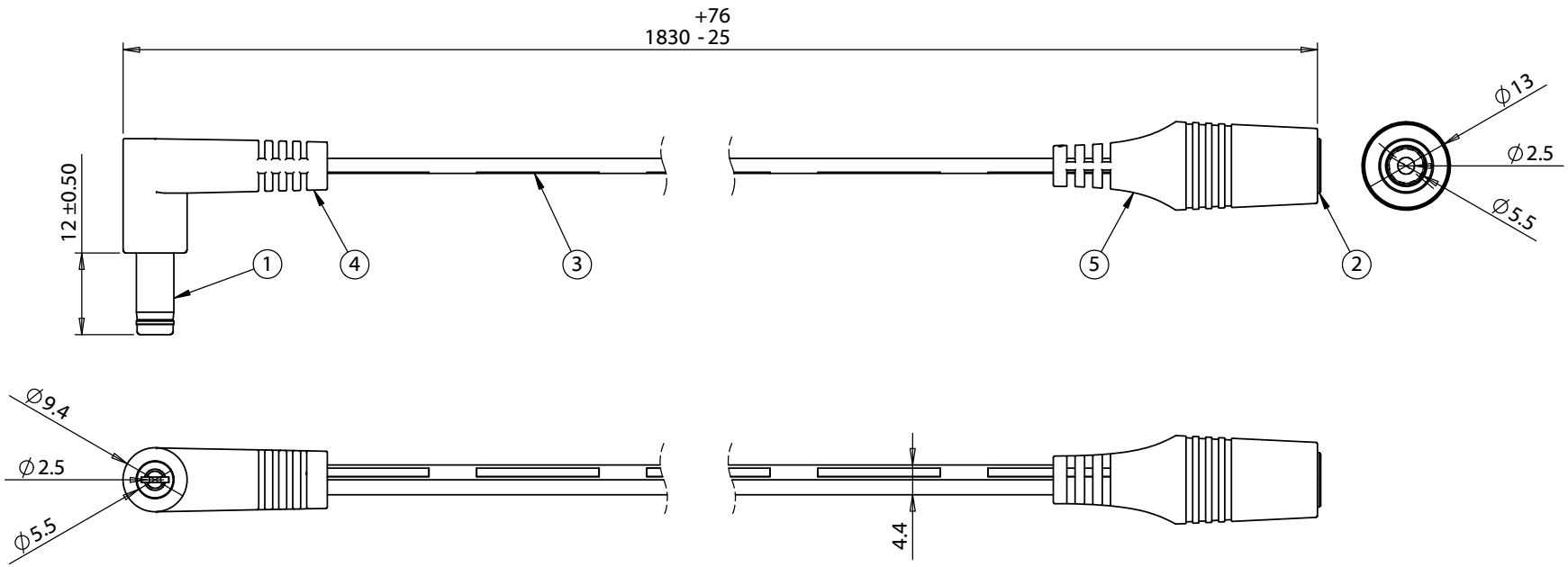

Notes:

Electical requirement: 3 A, 36 Vdc

Hi-Pot test: 600 Vac, 0.5 mA, 1 second

Wiring Diagram		
50-00351	wire color	50-00027
center	black with stripe	center
sleeve	black	sleeve

Revision:	Date:	Description:
A	1/19/2009	Re-issue CUI spec as Tensility
A1	8/31/2011	Updated description, connector, and wire information
A2	9/10/2013	Updated connector
A3	9/26/2013	Updated connector

Prepared: GL 2016.04.07 08:17:31 -07'00'

Verified: LA

Dimensions are in millimeters.
Tolerances:
X: ± 0.5 mm
X.X: ± 0.3 mm
X.XX: ± 0.05 mm

Notes:

RoHS and REACH compliant

Function test: no open, no short circuit, no intermittent

Description:

Cable, 1830 mm, 5.5x2.5x12 mm, 90° 50-00351 plug to 5.5x2.5mm, 50-00027 jack, 18 AWG, 30-00007 wire

TENSILITY

tel 1.541.323.3228 *800* 877.670.7118
fax 1.541.323.4202 *web* tensility.com

Size: A

Part number: 053-0380R (CA-2212)

Scale: 1:1

Sheet 1 of 1

5 4 3 2 1