Excellent Integrated System Limited

Stocking Distributor

Click to view price, real time Inventory, Delivery & Lifecycle Information:

Texas Instruments
LMH0030VS/NOPB

For any questions, you can email us directly:
sales@integrated-circuit.com

Distributor of Texas Instruments: Excellent Integrated System Limited
Datasheet of LMH0030VS/NOPB - IC SERIALIZER VID DGTL 64-TQFP
Contact us: sales@integrated-circuit.com Website: www.integrated-circuit.com

LMH0030 SMPTE 292M/259M Digital Video Serializer with Video and Ancillary Data FIFOs and Integrated Cable Driver

Check for Samples: LMH0030

FEATURES

- **SDTV/HDTV Serial Digital Video Standard Compliant**
- **Supports 270 Mbps, 360 Mbps, 540 Mbps, 1.4835Gbps and 1.485 Gbps SDV Data Rates with Auto-Detection**
- **Low Output Jitter: 125ps max, 85ps typical**
- **Low Power: Typically 430mW**
- **No External Serial Data Rate Setting or VCO Filtering Components Required***
- **Fast PLL Lock Time: < 150µs Typical at 1.485 Gbps**
- **Adjustable Depth Video FIFO for Timing Alignment**
- **Built-in Self-Test (BIST) and Video Test Pattern Generator (TPG)*** (1)
- **Automatic EDH/CRC Word and Flag Generation and Insertion**
- **On-Chip Ancillary Data FIFO and Insertion Control Circuitry**
- **Flexible Control and Configuration I/O Port**
- **LVCMOS Compatible Data and Control Inputs and Outputs**
- **75Ω ECL-Compatible, Differential, Serial Cable-Driver Outputs**
- **3.3V I/O Power Supply and 2.5V Logic Power Supply Operation**
- **64-pin TQFP Package**

(1) * Patent applications made or pending.

APPLICATIONS

- **SDTV/HDTV Parallel-to-Serial Digital Video Interfaces for:**
  - **Video Cameras**
  - **VTRs**
  - **Telecines**
  - **Digital Video Routers and Switchers**
  - **Digital Video Processing and Editing Equipment**
  - **Video Test Pattern Generators and Digital Video Test Equipment**
  - **Video Signal Generators**

DESCRIPTION

The LMH0030 SMPTE 292M/259M Digital Video Serializer with Ancillary Data FIFO and Integrated Cable Driver is a monolithic integrated circuit that encodes, serializes and transmits bit-parallel digital video data conforming to SMPTE 125M and 267M standard definition, 10-bit wide component video and SMPTE 260M, 274M, 295M and 296M high-definition, 20-bit wide component video standards. The LMH0030 operates at SMPTE 259M serial data rates of 270 Mbps, 360 Mbps, the SMPTE 344M serial data rate of 540 Mbps, and the SMPTE 292M serial data rates of 1483.5 and 1.485 Gbps. The serial data clock frequency is internally generated and requires no external frequency setting, trimming or filtering components.

Please be aware that an important notice concerning availability, standard warranty, and use in critical applications of Texas Instruments semiconductor products and disclaimers thereto appears at the end of this data sheet.
All trademarks are the property of their respective owners.

PRODUCTION DATA information is current as of publication date. Products conform to specifications per the terms of the Texas Instruments standard warranty. Production processing does not necessarily include testing of all parameters.

Copyright © 2006–2013, Texas Instruments Incorporated

DESCRIPTION (CONTINUED)

The LMH0030 performs functions which include: parallel-to-serial data conversion, SMPTE standard data encoding, NRZ to NRZI data format conversion, serial data clock generation and encoding with the serial data, automatic video rate and format detection, ancillary data packet management and insertion, and serial data output driving. The LMH0030 has circuitry for automatic EDH/CRC character and flag generation and insertion per SMPTE RP-165 (standard definition) or SMPTE 292M (high definition). Optional LSB dithering is implemented which prevents pathological pattern generation. Unique to the LMH0030 are its video and ancillary data FIFOs. The video FIFO allows the video data to be delayed from 0 to 4 parallel data clock periods for video timing purposes. The ancillary data port and on-chip FIFO and control circuitry store and insert ancillary flags, data packets and checksums into the ancillary data space. The LMH0030 also has an exclusive built-in self-test (BIST) and video test pattern generator (TPG) with SD and HD component video test patterns: reference black, PLL and EQ pathologicals and color bars in 4:3 and 16:9 raster formats for NTSC and PAL standards*. The color bar patterns feature optional bandwidth limiting coding in the chroma and luma transitions.

The LMH0030 has a unique multi-function I/O port for immediate access to control and configuration settings. This port may be programmed to provide external access to control functions and indicators as inputs and outputs. The designer can thus customize the LMH0030 to fit the desired application. At power-up or after a reset command, the LMH0030 is auto-configured to a default operating condition. Separate power pins for the output driver, PLL and the serializer improve power supply rejection, output jitter and noise performance.

The LMH0030's internal circuitry is powered from +2.5V and the I/O circuitry from a +3.3V supply. Power dissipation is typically 430mW at 1.485 Gbps including two 75Ω AC-coupled and back-matched output loads. The device is packaged in a 64-pin TQFP.

Typical Application

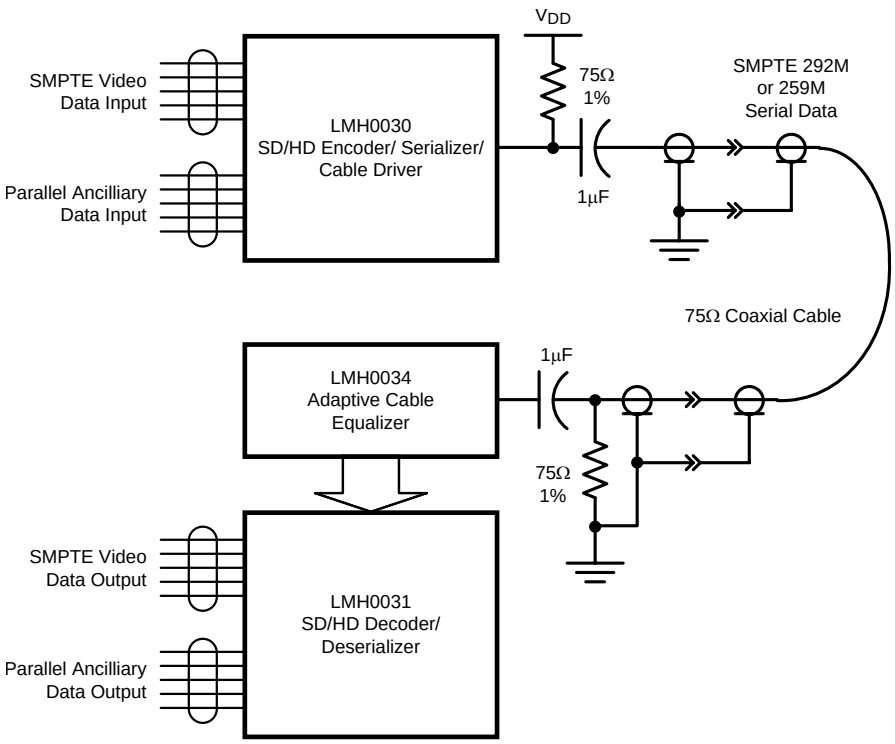

Copyright © 2006–2013, Texas Instruments Incorporated

Distributor of Texas Instruments: Excellent Integrated System Limited
Datasheet of LMH0030VS/NOPB - IC SERIALIZER VID DGTL 64-TQFP
Contact us: sales@integrated-circuit.com Website: www.integrated-circuit.com

Block Diagram

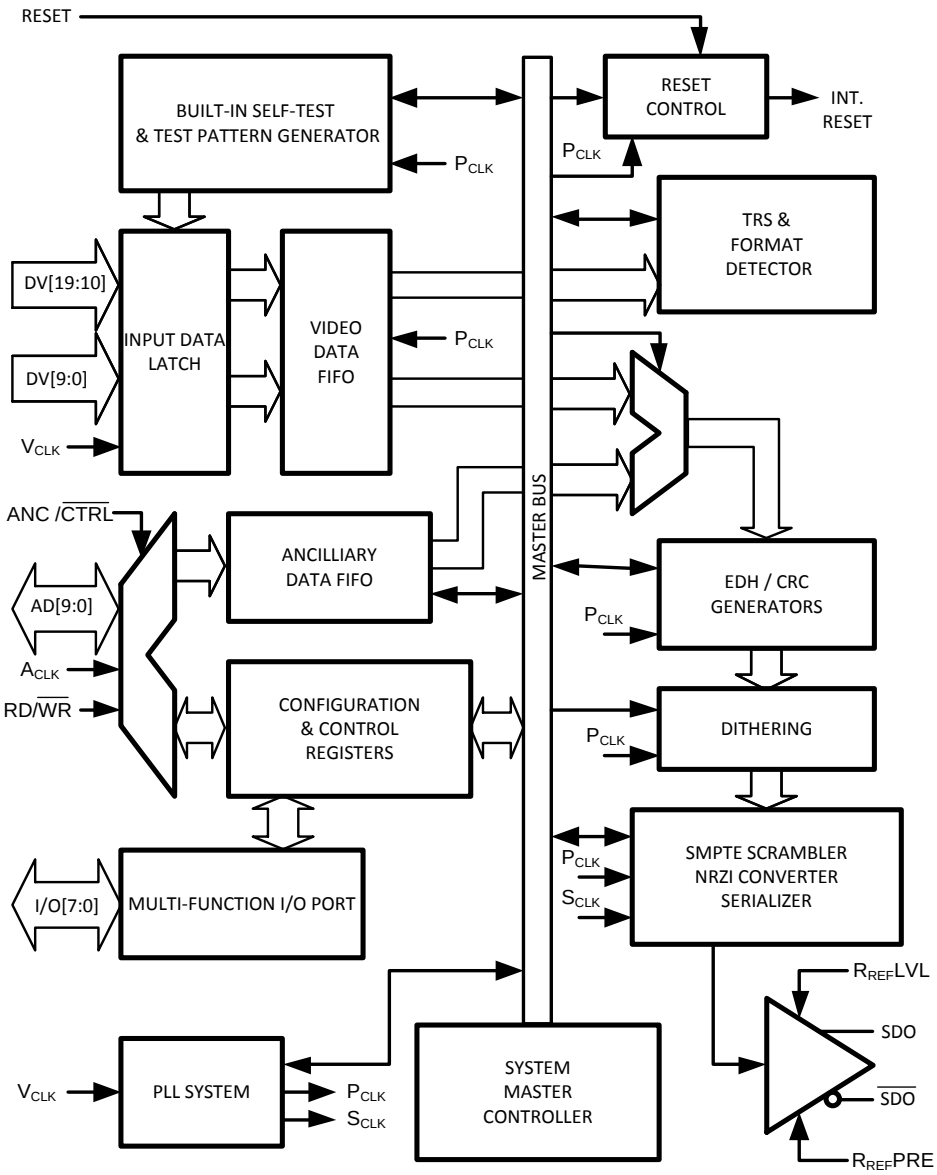

Distributor of Texas Instruments: Excellent Integrated System Limited
Datasheet of LMH0030VS/NOPB - IC SERIALIZER VID DGTL 64-TQFP
Contact us: sales@integrated-circuit.com Website: www.integrated-circuit.com

Connection Diagram

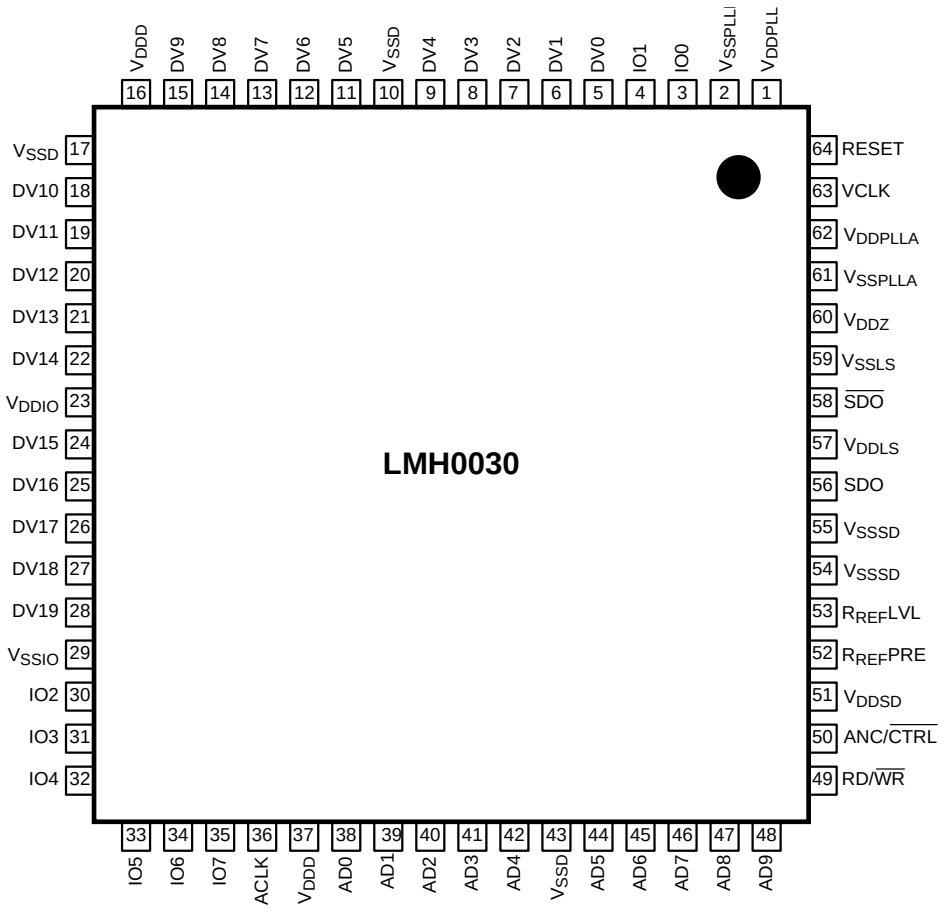

Figure 1. 64-Pin TQFP
See Package Number PAG0064A

Copyright © 2006–2013, Texas Instruments Incorporated

Distributor of Texas Instruments: Excellent Integrated System Limited
Datasheet of LMH0030VS/NOPB - IC SERIALIZER VID DGTL 64-TQFP
Contact us: sales@integrated-circuit.com Website: www.integrated-circuit.com

These devices have limited built-in ESD protection. The leads should be shorted together or the device placed in conductive foam during storage or handling to prevent electrostatic damage to the MOS gates.

ABSOLUTE MAXIMUM RATINGS(1)(2)

It is anticipated that this device will not be offered in a military qualified version.

CMOS I/O Supply Voltage (V_{DDIO}–V_{SSIO}):		4.0V
SDO Supply Voltage (V_{DDSD}–V_{SSSD}):		4.0V
Digital Logic Supply Voltage (V_{DDD}–V_{SSD}):		3.0V
PLL Digital Supply Voltage (V_{DDPLL}–V_{SSPLL}):		3.0V
PLL Analog Supply Voltage (V_{DDPLLA}–V_{SSPLLA}), (V_{DDZ} −V_{SSD}) :		3.0V
CMOS Input Voltage (Vi):		V_{SSIO} −0.15V to V_{DDIO} +0.15V
CMOS Output Voltage (Vo):		V_{SSIO} −0.15V to V_{DDIO} +0.15V
CMOS Input Current (single input):	Vi = V_{SSIO} −0.15V:	−5 mA
	Vi = V_{DDIO} +0.15V:	+5 mA
CMOS Output Source/Sink Current:		±10 mA
SDO Output Sink Current:		40 mA
Package Thermal Resistance	θ_{JA} @ 0 LFM Airflow	47°C/W
	θ_{JA} @ 500 LFM Airflow	27°C/W
	θ_{JC}	6.5°C/W
Storage Temp. Range:		−65°C to +150°C
Junction Temperature:		+150°C
Lead Temperature (Soldering 4 Sec):		+260°C
ESD Rating (HBM):		2 kV
ESD Rating (MM):		250V

(1) "Absolute Maximum Ratings" are those parameter values beyond which the life and operation of the device cannot be ensured. The stating herein of these maximums shall not be construed to imply that the device can or should be operated at or beyond these values. The table of "Electrical Characteristics" specifies acceptable device operating conditions.
(2) If Military/Aerospace specified devices are required, please contact the TI Semiconductor Sales Office / Distributors for availability and specifications.

RECOMMENDED OPERATING CONDITIONS

Symbol	Parameter	Conditions	Reference	Min	Typ	Max	Units
V_{DDIO}	CMOS I/O Supply Voltage	V_{DDIO}−V_{SSIO}		3.150	3.300	3.450	V
V_{DDSD}	SDO Supply Voltage	V_{DDSD}−V_{SSSD}		3.150	3.300	3.450	V
V_{DDD}	Digital Logic Supply Voltage	V_{DDD}–V_{SSD}		2.375	2.500	2.625	V
V_{DDPLL}	PLL Supply Voltage	V_{DDPLL}–V_{SSPLL}		2.375	2.500	2.625	V
V_{DDZ}	Analog Supply Voltage	V_{DDZ}–V_{SSD}		2.375	2.500	2.625	V
V_{IL}	CMOS Input Voltage, Low Level			V_{SSIO}			V
V_{IH}	CMOS Input Voltage High Level					V_{DDIO}	V
T_A	Operating Free Air Temperature			0		+70	°C
t_{JIT}	Video Clock Jitter		V_{CLK}		30		ps_{P-P}

Copyright © 2006–2013, Texas Instruments Incorporated

Distributor of Texas Instruments: Excellent Integrated System Limited
Datasheet of LMH0030VS/NOPB - IC SERIALIZER VID DGTL 64-TQFP
Contact us: sales@integrated-circuit.com Website: www.integrated-circuit.com

DC ELECTRICAL CHARACTERISTICS

Over Supply Voltage and Operating Temperature ranges, unless otherwise specified(1)(2).

Symbol	Parameter	Conditions	Reference	Min	Typ	Max	Units
V_{IH}	Input Voltage High Level		All LVCMOS Inputs	2.0		V_{DDIO}	V
V_{IL}	Input Voltage Low Level			V_{SSIO}		0.8	V
I_{IH}	Input Current High Level	$V_{IH} = V_{DDIO}$			+90	+150	µA
I_{IL}	Input Current Low Level	$V_{IL} = V_{SSIO}$			−1	−20	µA
V_{OH}	CMOS Output Voltage High Level	I_{OH} = −6.6 mA	All LVCMOS Outputs	2.4	2.7	V_{DDIO}	V
V_{OL}	CMOS Output Voltage Low Level	I_{OL} = +6.6 mA		V_{SSIO}	V_{SSIO} +0.3	V_{SSIO} +0.5V	V
V_{SDO}	Serial Driver Output Voltage	Test Circuit, Test Loads Shall Apply	SDO, $\overline{SDO}$	720	800	880	mV_{P-P}
I_{DD} (3.3V)	Power Supply Current, 3.3V Supply, Total	V_{CLK} = 27 MHz, NTSC color Bar Pattern, Test Circuit, Test Loads Shall Apply	V_{DDIO}, V_{DDSD}		48	65	mA
I_{DD} (3.3V)	Power Supply Current, 3.3V Supply, Total	V_{CLK} = 74.25 MHz, NTSC color Bar Pattern, Test Circuit, Test Loads Shall Apply	V_{DDIO}, V_{DDSD}		66	90	mA
I_{DD} (2.5V)	Power Supply Current, 2.5V Supply, Total	V_{CLK} = 27 MHz, NTSC color Bar Pattern, Test Circuit, Test Loads Shall Apply	V_{DDD}, V_{DDZ}, V_{DDPLL}		66	85	mA
I_{DD} (2.5V)	Power Supply Current, 2.5V Supply, Total	V_{CLK} = 74.25 MHz, NTSC color Bar Pattern, Test Circuit, Test Loads Shall Apply	V_{DDD}, V_{DDZ}, V_{DDPLL}		85	110	mA

(1) Current flow into device pins is defined as positive. Current flow out of device pins is defined as negative. All voltages are referenced to V_{SS} = 0V.
(2) Typical values are stated for $V_{DDIO} = V_{DDSD}$ = +3.3V, $V_{DDD} = V_{DDPLL}$ = +2.5V and T_A = +25°C.

AC ELECTRICAL CHARACTERISTICS

Over Supply Voltage and Operating Temperature ranges, unless otherwise specified(1).

Symbol	Parameter	Conditions	Reference	Min	Typ	Max	Units
f_{VCLK}	Parallel Video Clock Frequency		V_{CLK}	27		74.25	MHz
DC_V	Video Clock Duty Cycle		V_{CLK}	45	50	55	%
f_{ACLK}	Ancillary Clock Frequency		A_{CLK}			V_{CLK}	MHz
DC_A	Ancillary Clock Duty Cycle		A_{CLK}	45	50	55	%
t_r, t_f	Input Clock and Data Rise Time, Fall Time	10%–90%	V_{CLK}, A_{CLK}, DV_N, AD_N	1.0	1.5	3.0	ns
BR_{SDO}	Serial Data Rate		(2)(3)SDO, $\overline{SDO}$	270		1,485	M_{bps}
t_r, t_f	Rise Time, Fall Time	20%–80%, (3)	SDO, $\overline{SDO}$			270	ps
t_r, t_f	Rise Time, Fall Time	20%–80%, (2)	SDO, $\overline{SDO}$		500		ps
	Output Overshoot	(4)	SDO, $\overline{SDO}$		5		%

(1) Typical values are stated for $V_{DDIO} = V_{DDSD}$ = +3.3V, $V_{DDD} = V_{DDPLL}$ = +2.5V and T_A = +25°C.
(2) R_L = 75Ω, AC-coupled @ 270 M_{bps}, R_{REF}LVL = R_{REF}PRE = 4.75 kΩ 1%, See Test Loads and Test Circuit.
(3) R_L = 75Ω, AC-coupled @ 1,485 M_{bps}, R_{REF}LVL = R_{REF}PRE = 4.75 kΩ 1%, See Test Loads and Test Circuit.
(4) Specification is ensured by design.

Copyright © 2006–2013, Texas Instruments Incorporated

Distributor of Texas Instruments: Excellent Integrated System Limited
Datasheet of LMH0030VS/NOPB - IC SERIALIZER VID DGTL 64-TQFP
Contact us: sales@integrated-circuit.com Website: www.integrated-circuit.com

AC ELECTRICAL CHARACTERISTICS (continued)

Over Supply Voltage and Operating Temperature ranges, unless otherwise specified[1].

Symbol	Parameter	Conditions	Reference	Min	Typ	Max	Units
t_j	Serial Output Jitter, Intrinsic	270 M_{bps},[2] [5] [6] [7]	SDO, $\overline{SDO}$		270	350	ps_{P-P}
t_j	Serial Output Jitter, Intrinsic	1,485 M_{bps},[3] [5] [6] [7]	SDO, $\overline{SDO}$		85	125	ps_{P-P}
t_{LOCK}	Lock Time	See [2] [8] [9](SD Rates)			15		ms
t_{LOCK}	Lock Time	See [3] [8][9] (HD Rates)			15		ms
t_S	Setup Time, Video Data	Timing Diagram, [4]	DV_N to V_{CLK}		1.5	2.0	ns
t_H	Hold Time, Video Data	Timing Diagram, [4]	V_{CLK} to DV_N		1.5	2.0	ns
t_S	Setup Time, Anc. Data Port	Timing Diagram, [4]	AD_N to A_{CLK}		1.5	2.0	ns
t_H	Hold Time, Anc. Data Port	Timing Diagram, [4]	A_{CLK} to AD_N		1.5	2.0	ns

(5) Intrinsic timing jitter is measured in accordance with SMPTE RP 184-1996, SMPTE RP 192-1996 and the applicable serial data transmission standard, SMPTE 259M-1997 or SMPTE 292M-1998. A color bar test pattern is used. The value of f_{SCLK} is 270 MHz or 360 MHz for SMPTE 259M, 540MHz for SMPTE 344M, or 1485 MHz for SMPTE 292M serial data rates. See Timing Jitter Bandpass section.
(6) Intrinsic jitter is defined in accordance with SMPTE RP 184-1996 as: jitter at an equipment output in the absence of input jitter. As applied to this device, the input port is V_{CLK} and the output port is SDO or $\overline{SDO}$.
(7) Specification is ensured by characterization.
(8) Measured from rising-edge of first DV_{CLK} cycle until Lock Detect output goes high (true). Lock time includes format detection time plus PLL lock time.
(9) Average value measured between rising edges computed over at least one video field.

Distributor of Texas Instruments: Excellent Integrated System Limited
Datasheet of LMH0030VS/NOPB - IC SERIALIZER VID DGTL 64-TQFP
Contact us: sales@integrated-circuit.com Website: www.integrated-circuit.com

Test Loads

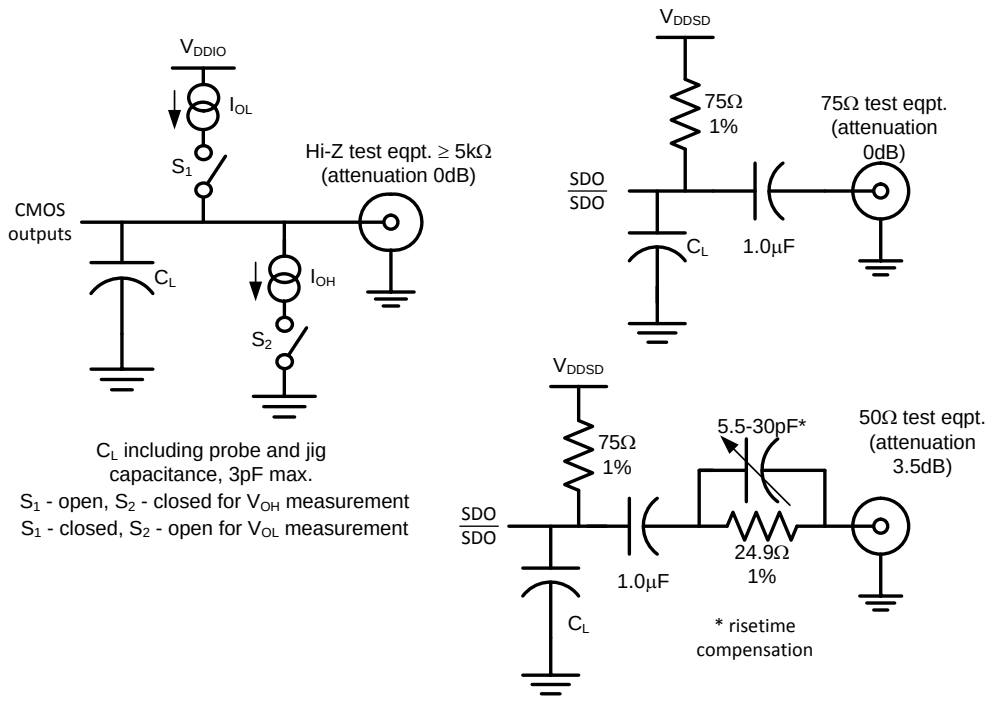

Timing Jitter Bandpass

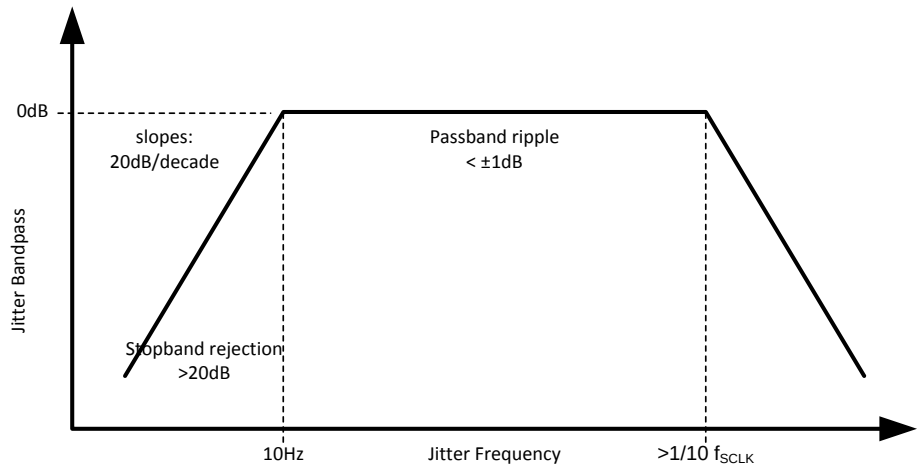

Copyright © 2006–2013, Texas Instruments Incorporated

Distributor of Texas Instruments: Excellent Integrated System Limited
Datasheet of LMH0030VS/NOPB - IC SERIALIZER VID DGTL 64-TQFP
Contact us: sales@integrated-circuit.com Website: www.integrated-circuit.com

Test Circuit

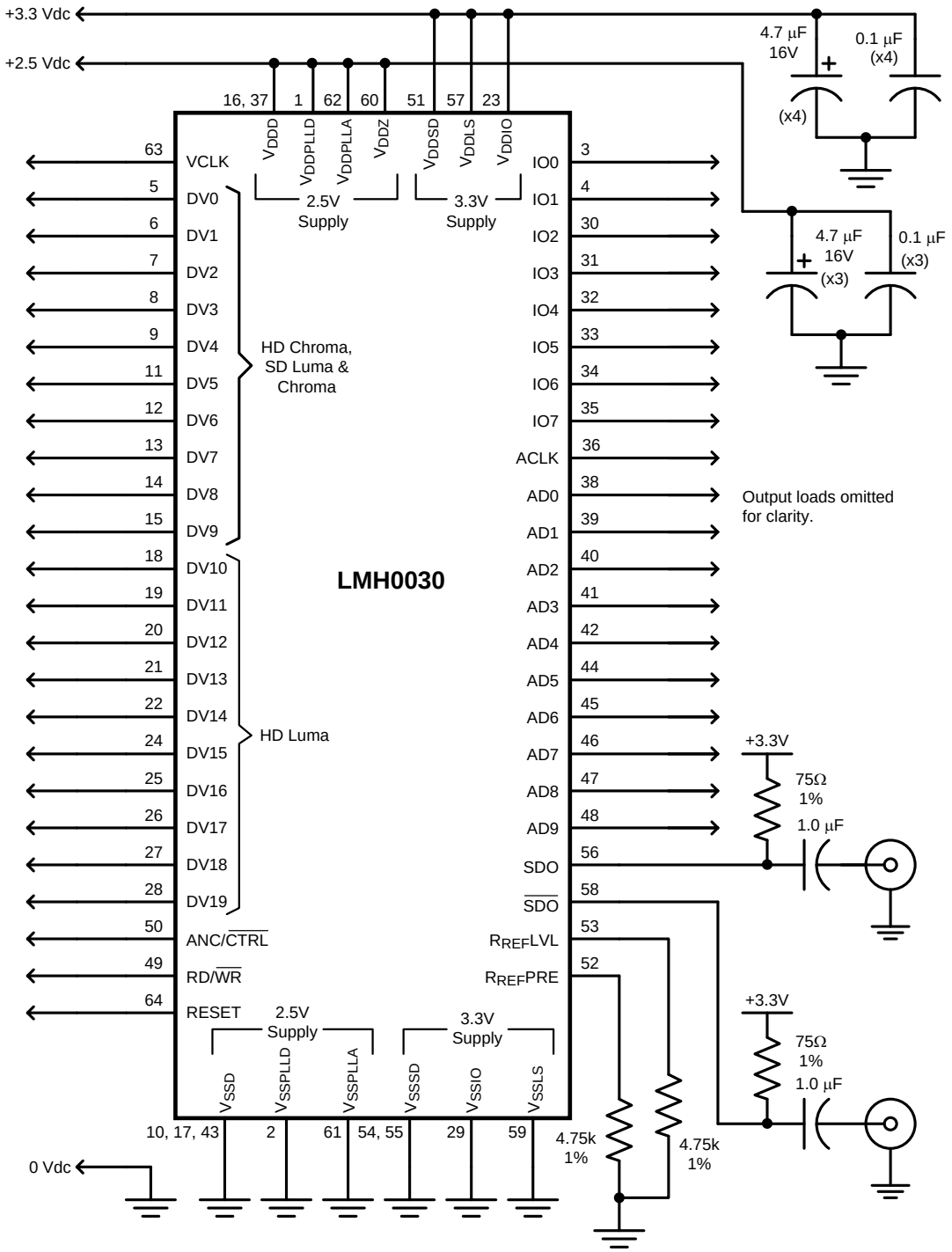

Distributor of Texas Instruments: Excellent Integrated System Limited
Datasheet of LMH0030VS/NOPB - IC SERIALIZER VID DGTL 64-TQFP
Contact us: sales@integrated-circuit.com Website: www.integrated-circuit.com

Timing Diagram

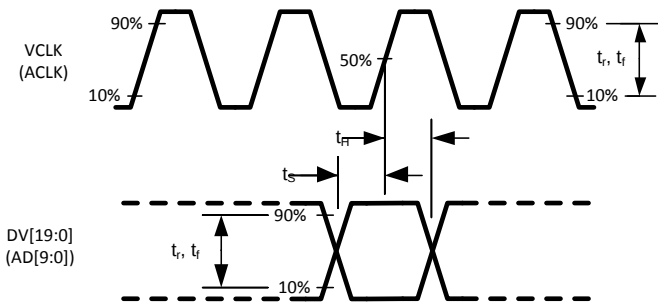

DEVICE OPERATION

The LMH0030 SDTV/HDTV Serializer is used in digital video signal origination equipment: cameras, video tape recorders, telecines and video test and other equipment. It converts parallel SDTV or HDTV component digital video signals into serial format. Logic levels within this equipment are normally produced by LVCMOS logic devices. The encoder produces serial digital video (SDV) signals conforming to SMPTE 259M, SMPTE 344M, or SMPTE 292M. The LMH0030 operates at parallel data rates of 27.0 MHz, 36.0 MHz, 54.0 MHz, 74.176MHz and 74.25 MHz. Corresponding serial data rates are 270 Mbps, 360 Mbps, 540 Mbps, 1.4835 Gbps and 1.485 Gbps.

VIDEO DATA PATH

The **input data register** accepts 10-bit standard definition or 20-bit high definition parallel data and associated parallel clock signals having LVCMOS-compatible levels. All parallel video data inputs, **DV[19:0]**, have internal pull-down devices. **VCLK** does not have an internal pull-down device. Parallel video data may conform to any of several SMPTE standards: 125M, 267M, 260M, 274M, 295M or 296M. Some segmented frame formats are not supported. For HDTV data, the upper 10 bits of the DV input are luminance (luma) information and the lower 10 bits are color difference (chrominance or chroma) information. For SDTV data, the lower order 10 bits contain both luma and chroma information. Output from this register feeds the video FIFO, video format detection circuit, TRS character detector, SMPTE scrambler, EDH/CRC generators, serializer/NRZI converter and the device control system.

Data from the input data register passes into a 4-register deep **video FIFO** prior to encoding and other processing. The depth of this FIFO is set by the **VIDEO FIFO Depth[2:0]** bits of the **ANC 0** control register.

The **video format detector** automatically determines the raster characteristics (video data format) of the parallel input data and configures the LMH0030 to properly handle the data. This assures that the data will be properly formatted, that the correct data rate is selected and that ancillary data, line numbers (HD) and CRC/EDH data are correctly inserted. Indication of the standard being processed is stored in the **FORMAT[4:0]** bits in the **FORMAT 1** control data register. This format data can be programmed for output on the multi-function I/O port.

The LMH0030 normally operates in an auto-format-detection mode. It may optionally be configured to process only a single video format by writing the appropriate **FORMAT SET[4:0]** control data into the **FORMAT 0** control register. The default state of **FORMAT SET[4:0]** is 0000b. Also, the LMH0030 may be configured to handle only the standard-definition data formats by setting the **SD ONLY** bit or only the high-definition data formats by setting the **HD ONLY** bit in the **FORMAT 0** control register. When both of these bits are reset the part automatically selects the data rate.

The **TRS character detector** processes the timing reference signals which control raster framing. The TRS detector supplies control signals to the system controller to identify the presence of the valid video data. The system controller supplies necessary control signals to the EDH/CRC control block. TRS character LSB-clipping as prescribed in ITU-R BT.601 is used. LSB-clipping causes all TRS characters with a value between 000h and 003h to be forced to 000h and all TRS characters with a value between 3FCh and 3FFh to be forced to 3FFh. Clipping is done prior to scrambling and EDH/CRC character generation.

The LMH0030 incorporates circuitry for **LSB dithering**. The **Dither Enable** bit in the **VIDEO INFO 0** register when set enables dithering. The **V Dither Enable** bit in the **VIDEO INFO 0** control register when set enables dithering during the vertical blanking interval. The initial condition of **Dither Enable** and **V Dither Enable** is OFF.

 Copyright © 2006–2013, Texas Instruments Incorporated

The **SMPTE scrambler** accepts 10-bit standard definition or 20-bit high definition parallel video data and encodes it using the polynomial $X^9 + X^4 + 1$ as specified in the respective standard: SMPTE 259M, SMPTE 344M, or SMPTE 292M. The data is then serialized and sent to the **NRZ-to-NRZI** converter before being output. The transmission bit order is LSB-first.

The **NRZ-to-NRZI converter** accepts NRZ serial data from the SMPTE scrambler. The data is converted to NRZI format using the polynomial (X + 1). The converter's output goes to the output cable driver amplifier.

ANCILLARY/CONTROL DATA PATH

The 10-bit, bi-directional **Ancillary and Control Data Port** performs two distinct functions in the LMH0030. First, it is used to selectively load ancillary data into the Ancillary Data FIFO for insertion into the video data stream. The utilization and flow of ancillary data within the device is managed by a system of control bits, masks and IDs in the control data registers. Second, this port provides read/write access to contents of the configuration and control registers.

Ancillary and control data are input via the 10-bit Ancillary/Control Data Port, **AD[9:0]**. The state of the **RD/$\overline{\text{WR}}$** control input determines whether data is read or written to the registers or written to the Ancillary Data FIFO. The state of the **ANC/$\overline{\text{CTRL}}$** control input selects which of the ancillary data or control data sub-systems is accessed through the port.

The **ACLK** input controls data flow through the port. The operation and frequency of **ACLK** is independent of the video data clock, **VCLK**. However, the frequency of **ACLK** must be less than or equal to **VCLK.** There is no low frequency limit for **ACLK** when it is being used for control register access. When the**ANC/$\overline{\text{CTRL}}$** input is a logic-high, **ACLK** affects only the ancillary data FIFO operation. When the **ANC/$\overline{\text{CTRL}}$** input is a logic-low, **ACLK** affects only the control register operation.

Inputs **AD[9:0]**, **RD/$\overline{\text{WR}}$** and **ANC/$\overline{\text{CTRL}}$** have internal pull down devices. **ACLK** does not have an internal pull down device.

CONTROL DATA READ FUNCTIONS

Control data is written to and read from the LMH0030 using the lower-order 8 bits **AD[7:0]** of the Ancillary/Control Data Port. This control data initializes, monitors and controls operation of the LMH0030. The upper two bits **AD[9:8]** of the port are handshaking signals with the device accessing the port. **AD[9:8]** must be driven as 00b (0XXh, where XX are AD[7:0]) when either a control register read or write address is being written to the port. **AD[9:8]** must be driven as 11b (3XXh, where XX are AD[7:0]) when control data is being written to the port. When control data is being read from the port, the LMH0030 will output **AD[9:8]** as 10b (2XXh, where XX are output data AD[7:0]) and may be ignored by the monitoring system.

NOTE

When power is first applied to the device or after it is reset, the **Ancillary and Control Data Port** must be initialized to receive data. This is done by toggling **ACLK** three (3) times.

Figure 2 shows the sequence of clock and control signals for reading control data from the ancillary/control data port. The **Control Data Read mode** is entered by making the **ANC/$\overline{\text{CTRL}}$** input low and the **RD/$\overline{\text{WR}}$** input high. Next, the 8-bit address of the control register set to be accessed is placed on port bits **AD[7:0]**. When a control register read address is being written to the port, **AD[9:8]** must be driven as 00b (0XXh, where XX are AD[7:0]). **ACLK** is then toggled. The address is captured on the rising edge of **ACLK**. Observe the port input hold timing specification.

Data from the selected register is driven by the port within a few nanoseconds immediately following the rising edge of **ACLK**. To avoid contention with the port, the address driver should be turned off or tri-stated immediately after the address is clocked into the device. Data may be read by external devices at any time after the removal of the address signal. Output data will be driven until the next rising edge of **ACLK**. When the host system finishes reading the data, toggle **ACLK** again. This second clock resets the port from drive to receive mode and readies the port for another access cycle. When control data is being read from the port, the LMH0030 will output **AD[9:8]** as 10b (2XXh, where XX are output data AD[7:0]) and may be ignored by the monitoring system.

Copyright © 2006–2013, Texas Instruments Incorporated

Distributor of Texas Instruments: Excellent Integrated System Limited
Datasheet of LMH0030VS/NOPB - IC SERIALIZER VID DGTL 64-TQFP
Contact us: sales@integrated-circuit.com Website: www.integrated-circuit.com

Example: Read the Full-field Flags via the AD port.

1. Set **ANC/$\overline{\text{CTRL}}$** to a logic-low.
2. Set **RD/$\overline{\text{WR}}$** to a logic-high.
3. Present 001h to **AD[9:0]** as the register address.
4. Toggle **ACLK**.
5. Release the bus driving the AD port.
6. Read the data present on the AD port. The Full-field Flags are bits AD[4:0].
7. Toggle **ACLK** to release the AD port.

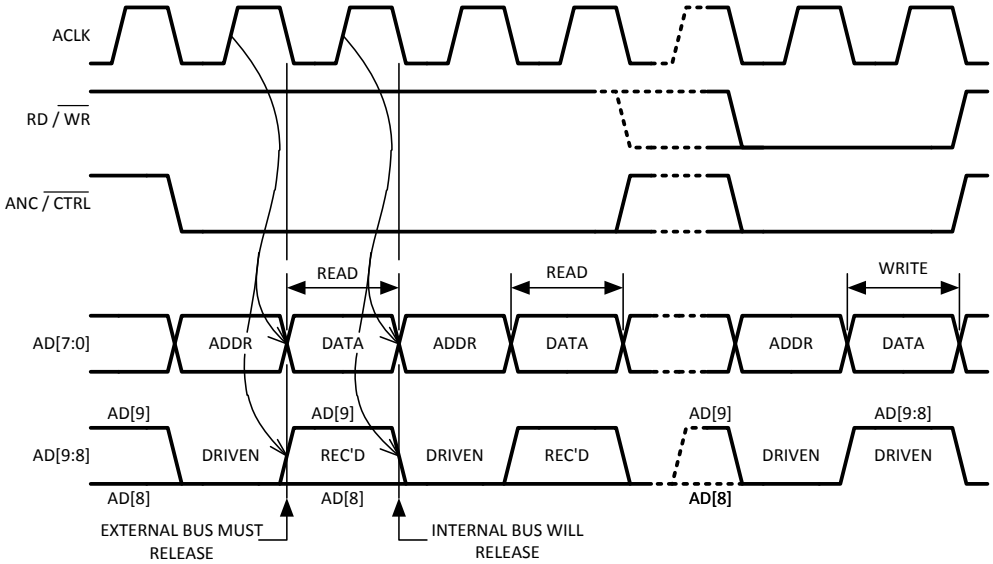

Figure 2. Control Data Read Timing (2 read and 1 write cycle shown)

CONTROL DATA WRITE FUNCTIONS

Figure 3 shows the sequence of clock and control signals for writing control data to the ancillary/control data port. The **control data write mode** is similar to the read mode. The control data write mode is started by making both the **ANC/$\overline{\text{CTRL}}$** input low and the **RD/$\overline{\text{WR}}$** input low. Next, the 8-bit address of the control register set to be accessed is placed on port bits **AD[7:0]**. When a control register write address is being written to the port, **AD[9:8]** must be driven as 00b (0XXh, where XX are AD[7:0]). Toggle **ACLK**. The address is captured on the rising edge of **ACLK**. Remove the address after clocking it into the device on or before the falling edge of **ACLK**. Observe the port input hold timing specification.

Next, the control register data is placed on the **AD[7:0]** port. **ACLK** is again toggled. The data is written to the selected register on the rising edge of **ACLK**. When control data is being written to the port, **AD[9:8]** must be driven as 11b (3XXh, where XX are AD[7:0]). Remove the register data after clocking it into the device on or before the falling edge of **ACLK**. Observe the port input hold timing specification.

Example: Setup (without enabling) the TPG Mode via the AD port using the 1125 line, 30 frame, 74.25MHz, interlaced component (SMPTE 274M) color bars as test pattern. The TPG may be enabled after setup using the Multi-function I/O port or by the control registers.

1. Set **ANC/$\overline{\text{CTRL}}$** to a logic-low.
2. Set **RD/$\overline{\text{WR}}$** to a logic-low.
3. Present 00Dh to **AD[9:0]** as the Test 0 register address.
4. Toggle **ACLK**.
5. Present 327h to **AD[9:0]** as the register data.
6. Toggle **ACLK**.

 Copyright © 2006–2013, Texas Instruments Incorporated

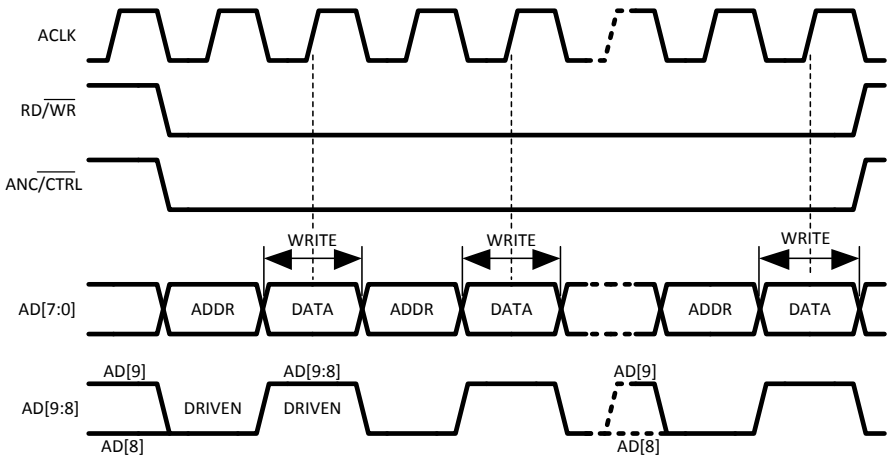

Figure 3. Control Data Write Timing

ANCILLARY DATA FUNCTIONS

The LMH0030 can multiplex **Ancillary Data** into the serial component video data stream. The ancillary data packet structure, formatting and control words are given in standard SMPTE 291M. The data may reside in portions of the horizontal and vertical blanking intervals. The data can consist of different types of message packets including audio data. The LMH0030 supports ancillary data in the HANC and VANC areas of standard definition component video and in the chrominance channel (C'r/C'b) only for high-definition operation. As it applies to embedded (multiplexed) audio data, this function follows the recommended practice for AES/EBU default Level A data handling.

Figure 4 shows the sequence of clock, data and control signals for writing **Ancillary Data** to the port. In ancillary data write mode, 10-bit ancillary data is written into the **AD[9:0]** port and subsequently into the ancillary data FIFO. From the FIFO, the ancillary data can be inserted into the ancillary data areas in the serial video data stream. Ancillary data may be written to the FIFO only when in the ancillary data mode. Ancillary data cannot be read from the FIFO through the AD Port.

The process of loading ancillary data into the FIFO is done during the active video portion of the video line. Occurrence of the active video line interval is indicated by the H-bit in the fourth word of the TRS sequence. The H-bit is available on I/O Port bit-2.

The ancillary data write process begins by making the **ANC/$\overline{\text{CTRL}}$** input high and the **RD/$\overline{\text{WR}}$** input low. Next, the data words are presented to the port in sequence as specified in SMPTE 291M beginning with the DID word. Data presented to the port within the required setup and hold time parameters will be written into the FIFO on the rising edge of **ACLK**. The user has the option of including a checksum in the ANC input data or of having the LMH0030 calculate and append the checksum. The LMH0030 will append the Ancillary Data Flag to each packet automatically before multiplexing with the video data.

The process of writing ancillary data to the FIFO is effectively a double-buffered write operation. Therefore, in order to properly write the last word of the data packet, the CRC, whether supplied with the ANC data packet or internally generated, to the FIFO, **ACLK** must be toggled two additional times after the last data word is clocked into the port (or when the CRC is being generated internally and appended). In the case where multiple packets are being loaded to the FIFO, the additional clocks are issued after the last word of the final packet is received by the port.

Writing of ancillary data to the FIFO, packet handling and insertion into the video data stream are controlled by a system of masking and control bits in the control registers. These and other ancillary data control functions such as **CHKSUM ATTACH IN** are explained in detail later in this data sheet.

Distributor of Texas Instruments: Excellent Integrated System Limited
Datasheet of LMH0030VS/NOPB - IC SERIALIZER VID DGTL 64-TQFP
Contact us: sales@integrated-circuit.com Website: www.integrated-circuit.com

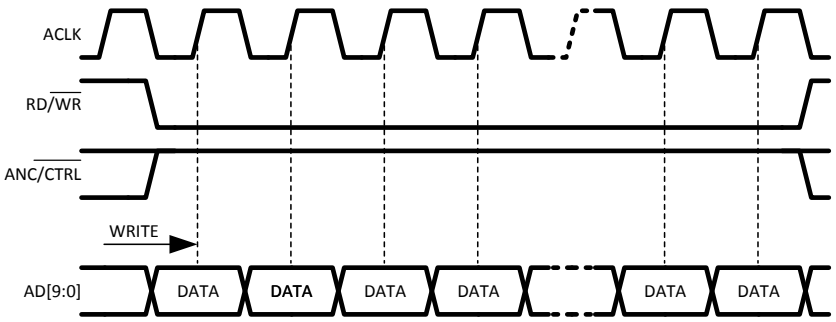

Figure 4. Ancillary Data Write Timing

MULTI-FUNCTION I/O PORT

The **Multi-function I/O port** can be configured to provide immediate access to many control and indicator functions within the LMH0030 configuration and control registers. The individual pins comprising this port may be assigned as input or output for selected bits in the control data registers. The multi-function I/O port is configured by way of an 8x6-bit register bank, **I/O pin 0 CONFIG** through **I/O pin 7 CONFIG**. The pin configuration registers contain codes which assign a control register bit to a particular I/O pin. Controls and indicators that are accessible by the port and their corresponding selection addresses are given in the I/O Pin Configuration Register Addresses, Table 6. Table 2 gives the control register bit assignments.

CAUTION

When writing data into the control registers via the multi-function I/O port, **ACLK** must be toggled to register the data as shown in Figure 5. It is not necessary to toggle **ACLK** when reading data from the multi-function I/O port.

Example: Program multi-function I/O port bit-0 as the SAV bit output.

1. Set **ANC/$\overline{\text{CTRL}}$** to a logic-low.
2. Set **RD/$\overline{\text{WR}}$** to a logic-low.
3. Present 00Fh to **AD[9:0]** as the **I/O PIN 0 CONFIG** register address (see Table 3).
4. Toggle **ACLK**.
5. Present 30Dh to **AD[9:0]** as the register data (see Table 6).
6. Toggle **ACLK**.

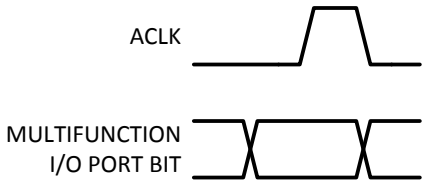

Figure 5. I/O Port Data Write Timing

Copyright © 2006–2013, Texas Instruments Incorporated

EDH/CRC SYSTEM

The LMH0030 has **EDH** and **CRC character generation and insertion** circuitry. The EDH system functions as described in SMPTE Recommended Practice RP-165. The CRC system functions as specified in SMPTE 292M. The **EDH/CRC polynomial generators** accept parallel data from the input register and generate the EDH and CRC check words for insertion in the serial data. Incoming parallel data is checked for errors and the EDH flags are updated automatically. EDH check words and status flags for SDTV data are generated using the polynomial $X^{16} + X^{12} + X^{6} + 1$ per SMPTE RP165. EDH check words are inserted in the serial data stream at the correct positions in the ancillary data space and formatted per SMPTE 291M. Generation and automatic insertion of the EDH check words is controlled by **EDH Force** and **EDH Enable** bits in the control registers. After a reset, the initial state of all EDH and CRC check characters is 00h.

The SMPTE 292M high definition video standard employs **CRC** (cyclic redundancy check codes) error checking instead of EDH. The CRC consists of two 18-bit words generated using the polynomial $X^{18} + X^{5} + X^{4} + 1$ per SMPTE 292M. One CRC is used for luminance and one for chrominance data. CRC data is inserted at the required place in the video data according to SMPTE 292M. The CRCs appear in the data stream following the EAV and line number characters.

EDH and CRC errors are reported in the EDH0, EDH1, and EDH2 register sets of the configuration and control registers.

PHASE-LOCKED LOOP SYSTEM

The **phase-locked loop** (PLL) system generates the output serial data clock at 10x (standard definition) or 20x (high definition) the parallel data clock frequency. This system consists of a VCO, dividers, phase-frequency detector and internal loop filter. The VCO free-running frequency is internally set. The parallel data clock $\mathbf{V_{CLK}}$ is the reference for the PLL. The PLL automatically generates the appropriate frequency for the serial clock rate. Loop filtering is internal to the LMH0030. The VCO has separate analog and digital power supply feeds: V_{DDPLLA} pin 62, V_{SSPLLA} pin 61, V_{DDPLLD} pin 1, and V_{SSPLLD} pin 2. These may be separately supplied power via external low-pass filters, if desired. PLL acquisition time is less than 200µs @ 1485 Mbps. The VCO halts when the V_{CLK} signal is not present or is inactive.

A **LOCK DETECT** indicator function is available as a bit in the **VIDEO INFO 0** control registers. **LOCK DETECT** is a logic-1 when the PLL is locked and a valid format has been detected. It can be assigned as an output on the multifunction I/O port. By default **LOCK DETECT** is assigned as I/O Port bit 4 after power-on or reset . This function also includes logic to check the stability of the device after the digital logic reset is released following PLL lock. If the system is not fully stable, the logic is automatically reset. **LOCK DETECT** also combines the function of indicating that the LMH0030 has detected the video format being received. This format detect function involves determination of the major raster parameters such as line length, number of video lines in a frame, and so forth. This is done so that information like line numbering can be correctly inserted. The PLL itself will have locked in 200 microseconds (HD rates) or less. However, resolution of all raster parameters may take the majority of a frame.

SERIAL DATA OUTPUT DRIVER

The **serial data outputs** provide low-skew complimentary or differential signals. The output buffer is a current-mode design and is intended to drive AC-coupled and terminated, 75Ω coaxial cables. The driver automatically adjusts its output slew rate depending upon the data rate being processed. Output levels are 800 mV_{P-P} ±10% into 75Ω AC-coupled loads. The 75Ω resistors connected to the SDO outputs function both as drain-load and back-matching resistors. Series back-matching resistors are not used with this output type.

The serial output level is controlled by the value of R_{REF}LVL and R_{REF}PRE connected to pin 53 and pin 52, respectively. The R_{REF}LVL resistor sets the peak-to-peak level of the output signal to the required SMPTE nominal level. The R_{REF}PRE resistor sets the value of a pre-emphasis current which is active during the transition times of the HD-rate output signal. The value of R_{REF}LVL is normally 4.75 KΩ, ±1%. The value of R_{REF}PRE is normally 4.75 KΩ, ±1%. The voltage present at these pins is approximately +1.3Vdc. The transition times of this output buffer design automatically adjust and are different for the HD and SD data rate conditions. The output buffer is quiescent when the device is in an out-of-lock condition. The output will become active after the PLL is locked and a valid format has been detected. Separate power feeds are provided for the serial output driver: V_{SSSD}, pins 54, 55, and 59; V_{DDSD}, pin 51; and V_{DDLS}, pin 57.

Copyright © 2006–2013, Texas Instruments Incorporated

CAUTION

This output buffer is not designed or specified for driving 50Ω or other impedance loads.

NOTE

The SMPTE return loss specification is highly dependent on board design and can be challenging to meet with the LMH0030's integrated cable driver. In order to meet the SMPTE return loss specification, it is recommended to use an external cable driver such as the LMH0002 HD/SD SDI cable driver on the output of the LMH0030.

POWER SUPPLIES, POWER-ON-RESET AND RESET INPUT

The LMH0030 requires two power supplies, 2.5V for the core logic functions and 3.3V for the I/O functions. The supplies must be applied to the device in proper sequence. The 3.3V supply must be applied prior to or coincident with the 2.5V supply. Application of the 2.5V supply must not precede the 3.3V supply. It is recommended that the 3.3V supply be configured or designed so as to control application of the 2.5V supply in order to satisfy this sequencing requirement.

The LMH0030 has an automatic, **power-on-reset** circuit. Reset initializes the device and clears TRS detection circuitry, all latches, registers, counters and polynomial generators, sets the EDH/CRC characters to 00h and disables the serial output. Table 1 lists the initial conditions of the configuration and control registers. An active-HIGH-true, manual **reset input** is available at pin 64. The reset input has an internal pull-down device and may be considered inactive when unconnected.

Important: When power is first applied to the device or following a reset, the **Ancillary and Control Data Port** must be initialized to receive data. This is done by toggling **ACLK** three times.

TEST PATTERN GENERATOR (TPG) AND BUILT-IN SELF-TEST (BIST)

The LMH0030 includes a built-in **test pattern generator (TPG)**. Four test pattern types are available for all data rates, all HD and SD formats, NTSC and PAL standards, and 4x3 and 16x9 raster sizes. The test patterns are: flat-field black, PLL pathological, equalizer (EQ) pathological and a 75%, 8-color vertical bar pattern. The pathologicals follow the recommendations of SMPTE RP 178-1996 regarding the test data used. The color bar pattern has optional bandwidth limiting coding in the chroma and luma data transitions between bars. The **VPG FILTER ENABLE** bit in the **VIDEO INFO 0** control register enables the color bar filter function. The default condition of **VPG FILTER ENABLE** is OFF.

The TPG also functions as a **built-in self-test (BIST)** which can verify device functionality. The BIST function performs a comprehensive go/no-go test of the device. The test may be run using any of the HD color bar test patterns or one of two SD test patterns, either a 270 Mbps NTSC full-field color bar or a PAL PLL pathological, as the test data pattern. Data is supplied internally in the input data register, processed through the device and tested for errors using either the EDH system for SD or the CRC system for HD. A go/no-go indication is logged in the **Pass/Fail** bit of the **TEST 0** control register set. This bit may be assigned as an output on the multifunction I/O port.

TPG and **BIST** operation is initiated by loading the code for the desired test pattern into the **Test Pattern Select [5:0]** bits of the **TEST 0** register. Table 5 gives the available test patterns and codes. (Recall also the requirement to initialize the ancillary data port control logic by clocking **ACLK** at least three (3) complete cycles before attempting to load the first register address). In the default power-on state, **TPG Enable** appears as bit 7 on the multi-function I/O port. The TPG is run by applying the appropriate frequency at the **VCLK** input for the format and rate selected and then setting the **TPG Enable** input on the multi-function I/O port, or by setting the **TPG Enable** bit in the **TEST 0** register.

Important: If the **TPG Enable** input of the I/O port is in its default mapping and is not being used to enable the TPG mode, attempting to enable TPG operation by setting bit 6 of the **TEST 0** register will not cause the TPG to operate. This is because the low logic level at the I/O port input pulldown overrides the high level being written to the register. The result is the TPG does not run.

Copyright © 2006–2013, Texas Instruments Incorporated

The **Pass/$\overline{\text{Fail}}$** bit in the **TEST 0** control register indicates the test status. If no errors have been detected, this bit will be set to logic-1 approximately 2 field intervals after **TPG Enable** is set. If errors have been detected in the internal circuitry of the LMH0030, **Pass/$\overline{\text{Fail}}$** will remain reset to a logic-0. The TPG or BIST is halted by resetting **TPG Enable**. The serial output data is present at the SDO outputs during TPG or BIST operation.

CAUTION

When attempting to use the TPG or BIST immediately after applying power or resetting the device, the TPG defaults to the 270 Mbps SD rate and expects a V_{CLK} clock frequency of 27MHz as input. This is because the code for the test pattern in the **TEST 0** register is set to 00h (525 line, 30 frame, 27MHz, NTSC 4x3 reference black). Attempting to apply a V_{CLK} frequency higher than the device expects, according to the setting in the **TEST 0** register, may result in the PLL locking up while attempting to slew to its maximum possible frequency. This situation is not recoverable by the use of the device **RESET** input. To recover from this condition, power must be removed and re-applied to the device. Proper conditioning of the V_{CLK} input, which does not have an internal pull down device, is mandatory to prevent admission of noise or unwanted signals at any time, especially during power-up or reset sequences. It is strongly recommended that V_{CLK} not be applied until device initialization and configuration is completed.

Example: Enable the TPG Mode to use the NTSC 270 Mbps color bars as the BIST and TPG pattern. Enable TPG operation using the I/O port.

1. Set **ANC/$\overline{\text{CTRL}}$** to a logic-low.
2. Set **RD/$\overline{\text{WR}}$** to a logic-low.
3. Present 00Dh to **AD[9:0]** as the **TEST 0** register address.
4. Toggle **ACLK**.
5. Present 303h to **AD[9:0]** as the register data (525 line, 30 frame, 27MHz, NTSC 4x3, color bars (SMPTE 125M)).
6. Toggle **ACLK**.
7. Set **TPG ENABLE** (I/O Port, bit 7) to a logic-high.
8. Toggle **ACLK**.
9. The **PASS/$\overline{\text{FAIL}}$** indicator (I/O Port, bit 6) is monitored for the result of the test. Alternatively, the **TEST 0** register may be read. Bit 7 is the Pass/Fail indicator bit.

CONFIGURATION AND CONTROL REGISTERS

The configuration and control registers store data which configures the operational modes of the LMH0030 or which result from its operation. Many of these registers can be mapped to the multi-function I/O bus to make them available as external I/O functions. These functions and initial values are summarized in Table 1 and detailed in Table 2. The power-on default condition for the multi-function I/O port is indicated in Table 1 and detailed in Table 6.

Table 1. Configuration and Control Data Register Summary

Register Function	Bits	Read or Write	Initial Condition (1)	Assignable to I/O Bus as	Notes
EDH Error (SD)	1	R		Output	See (1)
Full-Field Flags	5	R	Reset	No	
Active Picture Flags	5	R	Reset	No	
ANC Flags	5	R	Reset	No	
EDH Force	1	R/W	OFF	Input	
EDH Enable	1	R/W	ON	Input	
F/F Flag Error	1	R	Reset	Output	

(1) ON = logic-1, OFF = logic-0 (positive logic).

Copyright © 2006–2013, Texas Instruments Incorporated

Distributor of Texas Instruments: Excellent Integrated System Limited
Datasheet of LMH0030VS/NOPB - IC SERIALIZER VID DGTL 64-TQFP
Contact us: sales@integrated-circuit.com Website: www.integrated-circuit.com

Table 1. Configuration and Control Data Register Summary (continued)

Register Function	Bits	Read or Write	Initial Condition (1)	Assignable to I/O Bus as	Notes
A/P Flag Error	1	R	Reset	Output	
ANC Flag Error	1	R	Reset	Output	
ANC Checksum Force	1	R/W	OFF	Input	
ANC Checksum Error	1	R	Reset	Output	
FIFO Empty	1	R	Set	Output	
FIFO Full	1	R	Reset	Output	
FIFO Overrun	1	R	Reset	Output	
Video FIFO Depth	3	R/W	000b	No	
ANC ID	16	R/W	0000h	No	
ANC Mask	16	R/W	FFFFh	No	
FIFO Flush Static	1	R/W	OFF	No	
Chksum Attach In	1	R/W	OFF	Input	
FIFO Insert Enable	1	R/W	OFF	Input	
ANC Parity Mask Disable	1	R/W	OFF	No	
VANC	1	R/W	OFF	No	
Switch Point 0	8	R/W	00h	No	
Switch Point 1	8	R/W	00h	No	
Switch Point 2	8	R/W	00h	No	
Switch Point 3	8	R/W	00h	No	
Format Set	5	R/W	OFF	No	
SD Only	1	R/W	OFF	No	
HD Only	1	R/W	OFF	No	
Format	5	R		Output	Format [4] (2)
H	1	R		Output	See (2)
V	1	R		Output	See (2)
F	1	R		Output	See (2)
Test Pattern Select	6	R/W	00000b	Input	525/27 MHz/Black
TPG Enable	1	R/W	OFF	Input	See (2)
Pass/Fail	1	R		Output	See (2)
New Sync Position (NSP)	1	R		Output	
SAV	1	R		Output	
EAV	1	R		Output	
Lock Detect	1	R		Output	See (2)
VPG Filter Enable	1	R/W	OFF	Input	
Dither_Enable	1	R/W	OFF	Input	
Vert. Dither Enable	1	R/W	OFF	No	
Scrambler_ Enable	1	R/W	ON	No	
NRZI_Enable	1	R/W	ON	No	
LSB_Clipping	1	R/W	ON	No	
SYNC_Detect_Enable	1	R/W	ON	No	
I/O Bus Pin Config.	48	R/W	See Table 6	No	

(2) Connected to multifunction I/O port at power-on.

Copyright © 2006–2013, Texas Instruments Incorporated

Distributor of Texas Instruments: Excellent Integrated System Limited
Datasheet of LMH0030VS/NOPB - IC SERIALIZER VID DGTL 64-TQFP
Contact us: sales@integrated-circuit.com Website: www.integrated-circuit.com

Table 2. Control Register Bit Assignments

Bit 7	Bit 6	Bit 5	Bit 4	Bit 3	Bit 2	Bit 1	Bit 0
EDH 0 (register address 01h)							
EDH ERROR (SD)	EDH FORCE	EDH ENABLE	F/F FLAGS(4)	F/F FLAGS(3)	F/F FLAGS(2)	F/F FLAGS(1)	F/F FLAGS(0)
EDH 1 (register address 02h)							
reserved	reserved	reserved	A/P FLAGS(4)	A/P FLAGS(3)	A/P FLAGS(2)	A/P FLAGS(1)	A/P FLAGS(0)
EDH 2 (register address 03h)							
F/F FLAG ERROR	A/P FLAG ERROR	ANC FLAG ERROR	ANC FLAGS(4)	ANC FLAGS(3)	ANC FLAGS(2)	ANC FLAGS(1)	ANC FLAGS(0)
ANC 0 (register address 04h)							
VIDEO FIFO DEPTH(2)	VIDEO FIFO DEPTH(1)	VIDEO FIFO DEPTH(0)	FIFO OVERRUN	FIFO EMPTY	FIFO FULL	ANC CHECK-SUM ERROR	ANC CHECK-SUM FORCE
ANC 1 (register address 05h) DID							
ANC ID(7)	ANC ID(6)	ANC ID(5)	ANC ID(4)	ANC ID(3)	ANC ID(2)	ANC ID(1)	ANC ID(0)
ANC 2 (register address 06h) SDID/DBN							
ANC ID(15)	ANC ID(14)	ANC ID(13)	ANC ID(12)	ANC ID(11)	ANC ID(10)	ANC ID(9)	ANC ID(8)
ANC 3 (register address 07h) DID							
ANC MASK(7)	ANC MASK(6)	ANC MASK(5)	ANC MASK(4)	ANC MASK(3)	ANC MASK(2)	ANC MASK(1)	ANC MASK(0)
ANC 4 (register address 08h) SDID/DBN							
ANC MASK(15)	ANC MASK(14)	ANC MASK(13)	ANC MASK(12)	ANC MASK(11)	ANC MASK(10)	ANC MASK(9)	ANC MASK(8)
ANC 5 (register address 17h)							
FIFO INSERT ENABLE	CHSUM ATTACH IN	reserved	reserved	FIFO FLUSH STATIC	reserved	reserved	reserved
ANC 6 (register address 18h)							
reserved	reserved	ANC PARITY MASK	reserved	reserved	reserved	reserved	VANC
SWITCH POINT 0 (register address 09h)							
LINE(7)	LINE(6)	LINE(5)	LINE(4)	LINE(3)	LINE(2)	LINE(1)	LINE(0)
SWITCH POINT 1 (register address 0Ah)							
PROTECT(4)	PROTECT(3)	PROTECT(2)	PROTECT(1)	PROTECT(0)	LINE(10)	LINE(9)	LINE(8)
SWITCH POINT 2 (register address 19h)							
LINE(7)	LINE(6)	LINE(5)	LINE(4)	LINE(3)	LINE(2)	LINE(1)	LINE(0)
SWITCH POINT 3 (register address 1Ah)							
PROTECT(4)	PROTECT(3)	PROTECT(2)	PROTECT(1)	PROTECT(0)	LINE(10)	LINE(9)	LINE(8)
FORMAT 0 (register address 0Bh)							
reserved	SD ONLY	HD ONLY	FORMAT SET(4)	FORMAT SET(3)	FORMAT SET(2)	FORMAT SET(1)	FORMAT SET(0)
FORMAT 1 (register address 0Ch)							
F	V	H	FORMAT(4)	FORMAT(3)	FORMAT(2)	FORMAT(1)	FORMAT(0)
TEST 0 (register address 0Dh)							
PASS/FAIL	TPG ENABLE	TEST PATTERN SELECT(5)	TEST PATTERN SELECT(4)	TEST PATTERN SELECT(3)	TEST PATTERN SELECT(2)	TEST PATTERN SELECT(1)	TEST PATTERN SELECT(0)
VIDEO INFO 0 (register address 0Eh)							
DITHER ENABLE	VERT. DITHER ENABLE	VPG FILTER ENABLE	LOCK DETECT	EAV	SAV	NSP	reserved
MULTI-FUNCTION I/O BUS PIN CONFIGURATION							
I/O PIN 0 CONFIG (register address 0Fh)							
reserved	reserved	PIN 0 SEL[5]	PIN 0 SEL[4]	PIN 0 SEL[3]	PIN 0 SEL[2]	PIN 0 SEL[1]	PIN 0 SEL[0]
I/O PIN 1 CONFIG (register address 10h)							

Copyright © 2006–2013, Texas Instruments Incorporated

Distributor of Texas Instruments: Excellent Integrated System Limited
Datasheet of LMH0030VS/NOPB - IC SERIALIZER VID DGTL 64-TQFP
Contact us: sales@integrated-circuit.com Website: www.integrated-circuit.com

Table 2. Control Register Bit Assignments (continued)

Bit 7	Bit 6	Bit 5	Bit 4	Bit 3	Bit 2	Bit 1	Bit 0
reserved	reserved	PIN 1 SEL[5]	PIN 1 SEL[4]	PIN 1 SEL[3]	PIN 1 SEL[2]	PIN 1 SEL[1]	PIN 1 SEL[0]
I/O PIN 2 CONFIG (register address 11h)							
reserved	reserved	PIN 2 SEL[5]	PIN 2 SEL[4]	PIN 2 SEL[3]	PIN 2 SEL[2]	PIN 2 SEL[1]	PIN 2 SEL[0]
I/O PIN 3 CONFIG (register address 12h)							
reserved	reserved	PIN 3 SEL[5]	PIN 3 SEL[4]	PIN 3 SEL[3]	PIN 3 SEL[2]	PIN 3 SEL[1]	PIN 3 SEL[0]
I/O PIN 4 CONFIG (register address 13h)							
reserved	reserved	PIN 4 SEL[5]	PIN 4 SEL[4]	PIN 4 SEL[3]	PIN 4 SEL[2]	PIN 4 SEL[1]	PIN 4 SEL[0]
I/P PIN 5 CONFIG (register address 14h)							
reserved	reserved	PIN 5 SEL[5]	PIN 5 SEL[4]	PIN 5 SEL[3]	PIN 5 SEL[2]	PIN 5 SEL[1]	PIN 5 SEL[0]
I/O PIN 6 CONFIG (register address 15h)							
reserved	reserved	PIN 6 SEL[5]	PIN 6 SEL[4]	PIN 6 SEL[3]	PIN 6 SEL[2]	PIN 6 SEL[1]	PIN 6 SEL[0]
I/O PIN 7 CONFIG (register address 16h)							
reserved	reserved	PIN 7 SEL[5]	PIN 7 SEL[4]	PIN 7 SEL[3]	PIN 7 SEL[2]	PIN 7 SEL[1]	PIN 7 SEL[0]
TEST MODE 0 (register address 55h)							
reserved	reserved	SYNC DETECT ENABLE	LSB CLIPPING	reserved	NRZI ENABLE	SCRAMBLER ENABLE	reserved

Table 3. Control Register Addresses

Register Name	Address Decimal	Address Hexadecimal
EDH 0	1	01
EDH 1	2	02
EDH 2	3	03
ANC 0	4	04
ANC 1	5	05
ANC 2	6	06
ANC 3	7	07
ANC 4	8	08
ANC 5	23	17
ANC 6	24	18
SWITCH POINT 0	9	09
SWITCH POINT 1	10	0A
SWITCH POINT 2	25	19
SWITCH POINT 3	26	1A
FORMAT 0	11	0B
FORMAT 1	12	0C
TEST 0	13	0D
VIDEO INFO 0	14	0E
I/O PIN 0 CONFIG	15	0F
I/O PIN 1 CONFIG	16	10
I/O PIN 2 CONFIG	17	11
I/O PIN 3 CONFIG	18	12
I/O PIN 4 CONFIG	19	13
I/O PIN 5 CONFIG	20	14
I/O PIN 6 CONFIG	21	15
I/O PIN 7 CONFIG	22	16
TEST MODE 0	85	55

Copyright © 2006–2013, Texas Instruments Incorporated

EDH REGISTERS 0, 1 AND 2 (Addresses 01h through 03h)

Updated EDH packets may be inserted into the serial output data by setting the **EDH Force** bit in the control registers. The **EDH Force** control bit causes the insertion of new EDH checkwords and flags into the serial output regardless of the previous condition of EDH checkwords and flags in the input parallel data. This function may be used in situations where video content has been editted thus making the previous EDH information invalid. In the case of SMPTE 292M data, the CRC check characters are recalculated and inserted automatically regardless of the presence of CRC characters in the parallel data. After the LMH0030 is reset, the initial state of the CRC check characters is 00h.

The **EDH Enable** bit enables operation of the EDH generator function.

The **EDH ERROR (SD)** bit when set indicates that EDH error conditions are being reported in EDH ancillary data packets present in the parallel input data. Details of the specific error conditions contained in the EDH packets are reported via the full field, active picture and ancillary flag error bits and the specific flag bits in these registers.

The EDH flags **F/F FLAGS[4:0]** (full field), **A/P FLAGS[4:0]** (active picture) and **ANC FLAGS[4:0]** (ancillary data) are defined in SMPTE RP 165. The EDH flags are stored in the control registers. The flags are updated automatically when the EDH function is enabled and data is being received.

The status of EDH flag errors in incoming SD parallel data are reported in the **ffFlagError**, **apFlagError** and **ancFlagError** bits. The **ffFlagError**, **apFlagError** and **ancFlagError** bits are the logical-OR of the corresponding EDH and EDA flags of the EDH checkwords.

ANC REGISTER 0 (Address 04h)

The **V FIFO Depth[2:0]** bits control the depth of the video FIFO which follows the input data latches. The depth can be set from 0 to 4 stages deep by writing the corresponding binary code into these bits. For example: to set the Video FIFO depth at two registers, load 11010XXXXXb into the ANC 0 control register (where X represents the other functional bits of this register). To retain other data previously stored in a register, read the register's contents and logically-OR this with the new data. Then write the composite data back into the register.

Flags for **FIFO EMPTY**, **FIFO FULL** and **FIFO OVERRUN** are available in the configuration and control register set. These flags can also be assigned as inputs and outputs on the multi-function I/O port. The **FIFO OVERRUN** flag indicates that an attempt to write data into a full FIFO has occurred.

The **ANC Checksum Force** bit, under certain conditions, enables the overwriting of ancillary data checksums received in the parallel ancillary data. Calculation and insertion of new ancillary data checksums is controlled by the **ANC Checksum Force** bit. If a checksum error is detected (calculated and received checksums do not match) and the **ANC Checksum Force** bit is set, a new checksum will be inserted in the ancillary data replacing the previous one. If a checksum error is detected and the **ANC Checksum Force** bit is not set, the checksum mismatch is reported via the **ANC Checksum Error** bit.

Ancillary data checksums may be received in the incoming parallel ancillary data. Alternatively they may be calculated and inserted automatically by the LMH0030. The **CHKSUM ATTACH IN** bit in the control registers when set to a logic-1 indicates that the checksum is to be supplied in the incoming data. When the **CHKSUM ATTACH IN** bit is set, checksums for incoming data are calculated and checked against received checksums. Calculation and insertion of new ancillary data checksum is controlled by the **ANC Checksum Force** bit in the configuration and control registers. If a checksum error is detected (calculated and received checksums do not match) and the **ANC Checksum Force** bit is set, a new checksum will be inserted in the ancillary data replacing the previous one. If a checksum error is detected and the **ANC Checksum Force** bit is not set, the checksum mismatch is reported via the **ANC CHECKSUM ERROR** bit in the control registers.

The **ANC Checksum Error** bit indicates that the received ancillary data checksum did not agree with the LMH0030's internally generated checksum. This bit is available as an output on the multifunction I/O port.

ANC REGISTERS 1 THROUGH 4 (Address 05h through 08h)

Admission of ancillary data packets into the FIFO can be controlled by the **ANC MASK[15:0]** and **ANC ID[15:0]** bits in the control registers. The **ANC ID[7:0]** register can be set to a valid 8-bit Data Identification (DID) code used for component ancillary data packet identification as specified in SMPTE 291M. Similarly, the**ANC ID[15:8]** register can be set to a valid 8-bit Secondary Data Identification (SDID) or Data Block Number (DBN) code. The **ANC MASK[7:0]** is an 8-bit word that can be used to selectively control loading of packets with specific DIDs (or DID ranges) into the FIFO. Similarly, the **ANC MASK[15:8]** is an 8-bit word that can be used to selectively control loading of packets with specific SDID or DBNs (or SDID or DBN ranges).

Copyright © 2006–2013, Texas Instruments Incorporated

Distributor of Texas Instruments: Excellent Integrated System Limited
Datasheet of LMH0030VS/NOPB - IC SERIALIZER VID DGTL 64-TQFP
Contact us: sales@integrated-circuit.com Website: www.integrated-circuit.com

When **ANC MASK[7:0]** or **ANC MASK[15:8]** is set to FFh, packets with any DID, SDID or DBN can be loaded into the FIFO. When any bit or bits of **ANC MASK[7:0]** or **ANC MASK[15:8]** are set to a logic-1, the corresponding bit or bits of **ANC ID[7:0]** or **ANC ID[15:8]**, respectively are a don't-care when matching IDs of incoming packets. When **ANC MASK[7:0]** or **ANC MASK[15:8]** is set to 00h, the DID, SDID or DBN of incoming packets must match exactly, bit-for-bit, the setting of **ANC ID[7:0]** or **ANC ID[15:8]** in the control register for the packets to be loaded into the FIFO. The initial value of **ANC MASK[7:0]** and **ANC MASK[15:8]** is FFh. The initial value of **ANC ID[7:0]** and **ANC ID[15:8]** is 00h.

Bits 7 through 0 of Register ANC 1, **ANC ID[7:0]**, and Register ANC3, **ANC MASK[7:0]**, affect DID[7:0]. BIts 7 through 0 of Register ANC2, **ANC ID[15:8]**, and Register ANC 4, **ANC MASK[15:8]**, affect SDID[7:0] or DBN[7:0].

ANC REGISTER 5 (Address 17h)

The **FIFO INSERT ENABLE** bit enables insertion of ancillary data stored in the FIFO into the serial data stream. Data insertion is enabled when this bit is set to a logic-1. This bit can be used to delay automatic insertion of data into the serial data stream.

Setting the **FIFO FLUSH STAT** bit to a logic-1 flushes the FIFO. Data may not be loaded into the FIFO during **FIFO FLUSH STAT** execution. Similarly, **FIFO FLUSH STAT** may not be set when data is being input to the FIFO. **FIFO FLUSH STAT** is automatically reset after this operation is complete. Execution of these FIFO operations requires toggling of **ACLK**.

ANC REGISTER 6 (Addresses 18h)

The **ANC PARITY MASK** bit when set disables parity checking for the DATA ID (DID) and SECONDARY DATA ID (SDID) or Data Block Number (DBN) in the ANC data packet. When reset, parity checking is enabled, and, if a parity error occurs, the packet will not be loaded.

The **VANC** bit in the control registers, when set to a logic-1, enables insertion of ancillary data during the vertical blanking interval.

SWITCH POINT REGISTERS 0 THROUGH 3 (Addresses 09h, 0Ah, 19h and 1Ah)

The **Line[10:0]** and **Protect[4:0]** bits define the vertical switching point line and number of protected lines following the switching point line for fields 0 and 1 (or fields 1 and 2 as these are sometimes referred to) of high-defination formats. The vertical switching point for component digital standard definition formats is defined in SMPTE RP 168-1993. The vertical switching point for high-definition formats has the same basic definition. However, since the vertical switching point lines are not necessarily standardized among the various high-definition rasters, these registers provide a convenient means whereby the vertical switching point line and subsequent protected lines may be specified by the user. The Switch Point registers do not operate for standard definition formats.

The **Line[10:0]** bits of registers **Switch Point 0 and 1** may be loaded with a line number ranging from 0 to 1023 which then specifies the switching point line for Field 0. The **Protect[4:0]** bits of register **Switch Point 1** determine the number of lines from 0 to 15 after the vertical switching point line in which ancillary data may not be inserted. LINE(0) is the LSB and LINE(10) is the MSB for the **Line[10:0]** bits. Similar ordering holds for the **Protect[4:0]** bits.

The **Line[10:0]** and **Protect[4:0]** bits of registers **Switch Point 2 and 3** perform the same function as explained above for the vertical switching point line for Field 1.

FORMAT REGISTERS 0 (Addresses 0Bh)

The LMH0030 may be set to process a single video format by writing the appropriate data into the **FORMAT 0** register. The **Format Set[4:0]** bits confine the LMH0030 to recognize and process only one of the fourteen specified types of standard or high definition formats. When the LMH0030 is set to process a single format, it will not recognize and therefore will not process other formats that it is capable of recognizing. The **Format Set[4:0]** bits may not be used to confine device operation to a range of standards. For normal operating situations, it is recommended that the LMH0030 be operated in automatic format detection mode, i.e. that the Format 0 register be set to 00h.

 Copyright © 2006–2013, Texas Instruments Incorporated

The available formats and codes are detailed in Table 4. Generally speaking, the **Format Set[4:0]** codes indicate or group the formats as follows: **Format Set[4]** is set for the HD formats and reset for the SD formats. **Format Set[3]** when set indicates that PAL data is being processed. When reset NTSC data is being processed. **Format Set[2:0]** correspond to one of the sub-standards given in the table. Note that the LMH0030 makes no distinction in formats resulting from the processing of data at 74.25MHz or 74.176MHz.

The **HD Only** bit when set to a logic-1 locks the LMH0030 into the high definition data range and frequency. In systems designed to handle only high definition signals, enabling **HD Only** reduces the time required for the LMH0030 to establish frequency lock and determine the HD format being processed.

The **SD Only** bit when set to a logic-1 locks the LMH0030 into the standard definition data ranges and frequencies. In systems designed to handle only standard definition signals, enabling **SD Only** reduces the time required for the LMH0030 to establish frequency lock and determine the format being processed. When **SD Only** and **HD Only** are set to logic-0, the device operates in SD/HD mode.

Table 4. Video Raster Format Parameters

Format Code [4,3,2,1,0]	Format	Specification	Frame Rate	Lines	Active Lines	Samples	Active Samples
00001	SDTV, 54	SMPTE 344M	60I	525	507/487	3432	2880
00010	SDTV, 36	SMPTE 267M	60I	525	507/487	2288	1920
00011	SDTV, 27	SMPTE 125M	60I	525	507/487	1716	1440
01001	SDTV, 54	ITU-R BT 601.5	50I	625	577	3456	2880
01010	SDTV, 36	ITU-R BT 601.5	50I	625	577	2304	1920
01011	SDTV, 27	ITU-R BT 601.5	50I	625	577	1728	1440
10001	HDTV, 74.25	SMPTE 260M	30I	1125	1035	2200	1920
10010	HDTV, 74.25	SMPTE 274M	30I	1125	1080	2200	1920
10011	HDTV, 74.25	SMPTE 274M	30P	1125	1080	2200	1920
11001	HDTV, 74.25	SMPTE 274M	25I	1125	1080	2640	1920
11010	HDTV, 74.25	SMPTE 274M	25P	1125	1080	2640	1920
11100	HDTV, 74.25	SMPTE 295M	25I	1250	1080	2376	1920
11101	HDTV, 74.25	SMPTE 274M	24P	1125	1080	2750	1920
10100	HDTV, 74.25	SMPTE 296M	60P	750	720	1650	1280

FORMAT REGISTER 1 (Address 0Ch)

The LMH0030 can automatically determine the format of the incoming parallel data. The result of this operation is stored in the **FORMAT 1** register. The **Format[4:0]** bits identify which of the many possible video data standards that the LMH0030 can process is being received. These format codes follow the same arrangement as for the **Format Set[4:0]** bits. These formats and codes are given in Table 4. Bit **Format[4]** when set indicates that HD data is being processed. When reset, SD data is indicated. **Format[3]** when set indicates that PAL data is being processed. When reset NTSC data is being processed. **Format[2:0]** correspond with one of the sub-standards given in the table.

The **H, V, and F** bits register correspond to input TRS data bits 6, 7 and 8, respectively. The meaning and function of this data is the same for both standard definition (SMPTE 125M) and high definition (SMPTE 292M luminance and color difference) video data. Polarity is logic-1 equals HIGH-true. These bits are registered for the duration of the applicable field.

TEST 0 REGISTER (Address 0Dh)

The **Test Pattern Select** bits determine which test pattern is output when the Test Pattern Generator (TPG) mode or the Built-in Self-Test (BIST) mode is enabled. Table 5 gives the codes corresponding to the various test patterns. All HD color bars test patterns are BIST data. Standard Definition BIST test patterns are: NTSC, 27MHz, 4x3 color Bars and PAL, 27MHz, 4x3 PLL Pathological.

Copyright © 2006–2013, Texas Instruments Incorporated

The **TPG Enable** bit when set to a logic-1 enables the Test Pattern Generator function and built-in self-test (BIST). This bit is mapped to I/O port bit 7 in the default condition. Note that the input pulldown on the I/O port bit has the effect of overriding the logic level of data being written into the register via the ancillary/Control Data Port. In cases where it is desired to control the state of **TPG Enable** through the control register instead of the multi-function I/O port, bit 7, the I/O port bit must be remapped to another bit in the control registers. Remapping to a read-only function is recommended to avoid possible conflicting data being written into the remapped location.

The **Pass/$\overline{\text{Fail}}$** bit indicates the result of running the built-in self-test. This bit is a logic-1 for a pass condition. The bit is mapped to I/O port bit 6 in the default condition.

VIDEO INFO 0 REGISTER (Address 0Eh)

The **NSP** (New Sync Position) bit indicates that a new or out-of-place TRS character has been detected in the input data. This bit is set to a logic-1 and remains set for at least one horizontal line period or unless re-activated by a subsequent new or out-of-place TRS. It is reset by an EAV TRS character.

The **EAV** (end of active video) and **SAV** (start of active video) bits track the occurrence of the corresponding TRS characters.

Lock Detect is registered as a control signal and is a logic-1 when the PLL is locked and a valid format has been detected. This bit may be programmed as an output on the multi-function I/O port. This bit is mapped to I/O port bit 4 in the default condition. This function also includes logic to check the stability of the device after the digital logic reset is released following PLL lock. If the system is not fully stable, the logic is automatically reset. **LOCK DETECT** also combines the function of indicating that the LMH0030 has detected the video format being received. This format detect function involves determination of the major raster parameters such as line length, number of video lines in a frame, and so forth. This is done so that information like line numbering can be correctly inserted. The PLL itself will have locked in about 50 microseconds (HD rates, 150 microseconds for SD) or less; however, resolution of all raster parameters may take the majority of a frame.

The **VPG Filter Enable** bit when set enables operation of the Video Pattern Generator filter. Operation of this filter causes the insertion of transition codes in the chroma and luma data of color bar test patterns where these patterns change from one bar to the next. This filter reduces the magnitude of out-of-band frequency products which can be produced by abrupt transitions in the chroma and luma data when fed to D-to-A converters and picture monitors. The default condition of this bit is reset (off).

A method by which the occurrence of pathological data patterns can be prevented has been proposed for SD formats. The LMH0030 implements this process for SD formats. The **Dither Enable** and **Vertical Dither Enable** bits control operation of pseudo-random dithering applied to the two LSBs of the video data. Dithering is applied to active video data when the **Dither Enable** bit is set. When the Vertical Dither Enable bit is set, dithering is applied to that portion of the video line corresponding to active video for lines in the vertical blanking interval.

I/O PIN 0 THROUGH 7 CONFIGURATION REGISTERS (Addresses 0Fh through 16h)

The **Multi-function I/O Bus Pin Configuration** registers are used to map the bits of the multi-function I/O port to selected bits of the Configuration and Control Registers. Table 6 details the available Configuration and Control register bit functions that may be mapped to the port and their corresponding mapping addresses. **Pin # SEL[5]** in each register indicates whether the port pin is input or output. The port pin will be an input when this bit is set and an output when reset. Input-only functions may not be configured as outputs and vice versa. The remaining lower-order five address bits distinguish the particular function.

Example: Program, via the AD port, I/O port bit 0 as output for the SAV bit in the control registers.

1. Set **ANC/$\overline{\text{CTRL}}$** to a logic-low.
2. Set **RD/$\overline{\text{WR}}$** to a logic-low.
3. Present 00Fh to **AD[9:0]** as the **I/O PIN 0 CONFIG** register address (see Table 3).
4. Toggle **ACLK**.
5. Present 30Dh to **AD[9:0]** as the register data, the bit address of the SAV bit in the control registers (see Table 6).
6. Toggle **ACLK**.

Copyright © 2006–2013, Texas Instruments Incorporated

Distributor of Texas Instruments: Excellent Integrated System Limited
Datasheet of LMH0030VS/NOPB - IC SERIALIZER VID DGTL 64-TQFP
Contact us: sales@integrated-circuit.com Website: www.integrated-circuit.com

TEST MODE 0 REGISTER (Address 55h)

The four bits of this register are intended for use as test mode functions. They are not normal operating modes. The bits may be set (enabled) or reset (disabled) by writing to the register. Reading this register sets (enables) all bits to their default ON condition.

The **Scrambler_Enable** bit enables operation of the SMPTE scrambler function. This bit is normally ON.

The **NRZI_Enable** bit enables operation of the NRZ-to-NRZI conversion function. This bit is normally ON.

The **LSB_Clipping** bit enables operation of the LSB clipping function. This bit is normally ON.

The **Sync_Detect_Enable** bit enables operation of the TRS detector function. This bit is normally ON.

Table 5. Test Pattern Selection Codes (1)

Test Pattern Select Word Bits >	Bit 5	Bit 4	Bit 3	Bit 2	Bit 1	Bit 0
Video Raster Standard	1=HD	1=Progressive 0=Interlaced			00=Black 01=PLL Path.	
	0=SD	1=PAL 0=NTSC			10=EQ Path. 11=color Bars	
1125 Line, 74.25 MHz, 30 Frame Interlaced Component (SMPTE 260M)						
Ref. Black	1	0	0	0	0	0
PLL Path.	1	0	0	0	0	1
EQ Path.	1	0	0	0	1	0
color Bars	1	0	0	0	1	1
1125 Line, 74.25 MHz, 30 Frame Interlaced Component (SMPTE 274M)						
Ref. Black	1	0	0	1	0	0
PLL Path.	1	0	0	1	0	1
EQ Path.	1	0	0	1	1	0
color Bars	1	0	0	1	1	1
1125 Line, 74.25 MHz, 25 Frame Interlaced Component (SMPTE 274M)						
Ref. Black	1	0	1	0	0	0
PLL Path.	1	0	1	0	0	1
EQ Path.	1	0	1	0	1	0
color Bars	1	0	1	0	1	1
1125 Line, 74.25 MHz, 25 Frame Interlaced Component (SMPTE 295M)						
Ref. Black	1	0	1	1	0	0
PLL Path.	1	0	1	1	0	1
EQ Path.	1	0	1	1	1	0
color Bars	1	0	1	1	1	1
1125 Line, 74.25 MHz, 30 Frame Progressive Component (SMPTE 274M)						
Ref. Black	1	1	0	0	0	0
PLL Path.	1	1	0	0	0	1
EQ Path.	1	1	0	0	1	0
color Bars	1	1	0	0	1	1
1125 Line, 74.25 MHz, 25 Frame Progressive Component (SMPTE 274M)						
Ref. Black	1	1	0	1	0	0
PLL Path.	1	1	0	1	0	1
EQ Path.	1	1	0	1	1	0
color Bars	1	1	0	1	1	1

(1) **Note:** SD BIST patterns are NTSC 4x3 color Bars and PAL 4x3 PLL Pathological. HD BIST patterns are color bars for each format.

Distributor of Texas Instruments: Excellent Integrated System Limited
Datasheet of LMH0030VS/NOPB - IC SERIALIZER VID DGTL 64-TQFP
Contact us: sales@integrated-circuit.com Website: www.integrated-circuit.com

Table 5. Test Pattern Selection Codes[1] (continued)

Test Pattern Select Word Bits >	Bit 5	Bit 4	Bit 3	Bit 2	Bit 1	Bit 0
1125 Line, 74.25 MHz, 24 Frame Progressive Component (SMPTE 274M)						
Ref. Black	1	1	1	0	0	0
PLL Path.	1	1	1	0	0	1
EQ Path.	1	1	1	0	1	0
color Bars	1	1	1	0	1	1
750 Line, 74.25 MHz, 60 Frame Progressive Component (SMPTE 296M)						
Ref. Black	1	1	1	1	0	0
PLL Path.	1	1	1	1	0	1
EQ Path.	1	1	1	1	1	0
color Bars	1	1	1	1	1	1
525 Line, 30 Frame, 27 MHz, NTSC 4x3 (SMPTE 125M)						
Ref. Black	0	0	0	0	0	0
PLL Path.	0	0	0	0	0	1
EQ Path.	0	0	0	0	1	0
color Bars (SD BIST)	0	0	0	0	1	1
625 Line, 25 Frame, 27 MHz, PAL 4x3 (ITU-T BT.601)						
Ref. Black	0	1	0	0	0	0
PLL Path. (SD BIST)	0	1	0	0	0	1
EQ Path.	0	1	0	0	1	0
color Bars	0	1	0	0	1	1
525 Line, 30 Frame, 36 MHz, NTSC 16x9 (SMPTE 125M)						
Ref. Black	0	0	0	1	0	0
PLL Path.	0	0	0	1	0	1
EQ Path.	0	0	0	1	1	0
color Bars	0	0	0	1	1	1
625 Line, 25 Frame, 36 MHz, PAL 16x9 (ITU-T BT.601)						
Ref. Black	0	1	0	1	0	0
PLL Path.	0	1	0	1	0	1
EQ Path.	0	1	0	1	1	0
color Bars	0	1	0	1	1	1
525 Line, 30 Frame, 54 MHz (NTSC)						
Ref. Black	0	0	1	0	0	0
PLL Path.	0	0	1	0	0	1
EQ Path.	0	0	1	0	1	0
color Bars	0	0	1	0	1	1
625 Line, 25 Frame, 54 MHz (PAL)						
Ref. Black	0	1	1	0	0	0
PLL Path.	0	1	1	0	0	1
EQ Path.	0	1	1	0	1	0
color Bars	0	1	1	0	1	1

Copyright © 2006–2013, Texas Instruments Incorporated

Table 6. I/O Configuration Register Addresses for Control Register Functions

Register Bit	Bit Address Pin # SEL [n]						I/P or O/P	Power-On Status
	[5]	[4]	[3]	[2]	[1]	[0]		
reserved	0	0	0	0	0	0		
FF Flag Error	0	0	0	0	0	1	Output	
AP Flag Error	0	0	0	0	1	0	Output	
ANC Flag Error	0	0	0	0	1	1	Output	
CRC Error (SD/HD)	0	0	0	1	0	0	Output	I/O Port Bit 5
Addresses x05h through x0Ch are reserved.								
SAV	0	0	1	1	0	1	Output	
EAV	0	0	1	1	1	0	Output	
NSP	0	0	1	1	1	1	Output	
F	0	1	0	0	1	0	Output	I/O Port Bit 0
V	0	1	0	0	1	1	Output	I/O Port Bit 1
H	0	1	0	1	0	0	Output	I/O Port Bit 2
Format[0]	0	1	0	1	0	1	Output	
Format[1]	0	1	0	1	1	0	Output	
Format[2]	0	1	0	1	1	1	Output	
Format[3]	0	1	1	0	0	0	Output	
Format[4]	0	1	1	0	0	1	Output	I/O Port Bit 3 (SD/HD)
FIFO Full	0	1	1	0	1	0	Output	
FIFO Empty	0	1	1	0	1	1	Output	
Lock Detect	0	1	1	1	0	0	Output	I/O Port Bit 4
Pass/Fail	0	1	1	1	0	1	Output	I/O Port Bit 6
FIFO Overrun	0	1	1	1	1	0	Output	
ANC Chksum Error	0	1	1	1	1	1	Output	
EDH Force	1	0	0	0	0	0	Input	
Test Pattern Select[0]	1	0	0	0	0	1	Input	
Test Pattern Select[1]	1	0	0	0	1	0	Input	
Test Pattern Select[2]	1	0	0	0	1	1	Input	
Test Pattern Select[3]	1	0	0	1	0	0	Input	
Test Pattern Select[4]	1	0	0	1	0	1	Input	
Test Pattern Select[5]	1	0	0	1	1	0	Input	
EDH Enable	1	0	0	1	1	1	Input	
TPG Enable	1	0	1	0	0	0	Input	I/O Port Bit 7
reserved	1	0	1	0	0	1		
Chksum Attach In	1	0	1	0	1	0	Input	
reserved	1	0	1	0	1	1		
VPG Filter Enable	1	0	1	1	0	0	Input	
Dither Enable	1	0	1	1	0	1	Input	

Copyright © 2006–2013, Texas Instruments Incorporated

Distributor of Texas Instruments: Excellent Integrated System Limited
Datasheet of LMH0030VS/NOPB - IC SERIALIZER VID DGTL 64-TQFP
Contact us: sales@integrated-circuit.com Website: www.integrated-circuit.com

Table 6. I/O Configuration Register Addresses for Control Register Functions (continued)

Register Bit	Bit Address Pin # SEL [n]						I/P or O/P	Power-On Status
	[5]	[4]	[3]	[2]	[1]	[0]		
FIFO Insert Enable	1	0	1	1	1	1	Input	

Copyright © 2006–2013, Texas Instruments Incorporated

PIN DESCRIPTIONS(1)

Pin	Name	Description
1	V_{DDPLLD}	Positive Power Supply Input (2.5V supply, PLL Logic)
2	V_{SSPLLD}	Negative Power Supply Input (2.5V supply, PLL Logic)
3	IO0	Multi-Function I/O Port
4	IO1	Multi-Function I/O Port
5	DV0	Parallel Video Input (HD=Chroma, SD=Luma & Chroma)
6	DV1	Parallel Video Input (HD=Chroma, SD=Luma & Chroma)
7	DV2	Parallel Video Input (HD=Chroma, SD=Luma & Chroma)
8	DV3	Parallel Video Input (HD=Chroma, SD=Luma & Chroma)
9	DV4	Parallel Video Input (HD=Chroma, SD=Luma & Chroma)
10	V_{SSD}	Negative Power Supply Input (2.5V supply, Digital Logic)
11	DV5	Parallel Video Input (HD=Chroma, SD=Luma & Chroma)
12	DV6	Parallel Video Input (HD=Chroma, SD=Luma & Chroma)
13	DV7	Parallel Video Input (HD=Chroma, SD=Luma & Chroma)
14	DV8	Parallel Video Input (HD=Chroma, SD=Luma & Chroma)
15	DV9	Parallel Video Input (HD=Chroma, SD=Luma & Chroma)
16	V_{DDD}	Positive Power Supply Input (2.5V supply, Digital Logic)
17	V_{SSD}	Negative Power Supply Input (2.5V supply, Digital Logic)
18	DV10	Parallel Video Input (HD=Luma)
19	DV11	Parallel Video Input (HD=Luma)
20	DV12	Parallel Video Input (HD=Luma)
21	DV13	Parallel Video Input (HD=Luma)
22	DV14	Parallel Video Input (HD=Luma)
23	V_{DDIO}	Positive Power Supply Input (3.3V supply, I/O)
24	DV15	Parallel Video Input (HD=Luma)
25	DV16	Parallel Video Input (HD=Luma)
26	DV17	Parallel Video Input (HD=Luma)
27	DV18	Parallel Video Input (HD=Luma)
28	DV19	Parallel Video Input (HD=Luma)
29	V_{SSIO}	Negative Power Supply Input (3.3V supply, I/O)
30	IO2	Multi-Function I/O Port
31	IO3	Multi-Function I/O Port
32	IO4	Multi-Function I/O Port
33	IO5	Multi-Function I/O Port
34	IO6	Multi-Function I/O Port
35	IO7	Multi-Function I/O Port
36	ACLK	Ancillary/Control Clock Input
37	V_{DDD}	Positive Power Supply Input (2.5V supply, Digital Logic)
38	AD0	Ancillary/Control Data I/O Port
39	AD1	Ancillary/Control Data I/O Port
40	AD2	Ancillary/Control Data I/O Port
41	AD3	Ancillary/Control Data I/O Port
42	AD4	Ancillary/Control Data I/O Port
43	V_{SSD}	Negative Power Supply Input (2.5V supply, Digital Logic)
44	AD5	Ancillary/Control Data I/O Port
45	AD6	Ancillary/Control Data I/O Port
46	AD7	Ancillary/Control Data I/O Port

(1) **Note:** All LVCMOS inputs except VCLK and ACLK have internal pull-down devices.

Copyright © 2006–2013, Texas Instruments Incorporated

PIN DESCRIPTIONS(1) (continued)

Pin	Name	Description
47	AD8	Ancillary/Control Data I/O Port
48	AD9	Ancillary/Control Data I/O Port
49	RD/$\overline{WR}$	Ancillary/Control Data Port Read/Write Control Input
50	ANC/$\overline{CTRL}$	Ancillary/Control Data Port Function Control Input
51	V_{DDSD}	Positive Power Supply Input (3.3V supply, Output Driver)
52	R_{REF}PRE	Output Preemphasis Reference Resistor (4.75 KΩ, 1% Nom.)
53	R_{REF}LVL	Output Level Reference Resistor (4.75 KΩ, 1% Nom.)
54	V_{SSSD}	Negative Power Supply Input (3.3V supply, Output Driver)
55	V_{SSSD}	Negative Power Supply Input (3.3V supply, Output Driver)
56	SDO	Serial Data True Output
57	V_{DDLS}	Positive Power Supply Input (3.3V supply, Level Shift)
58	$\overline{SDO}$	Serial Data Complement Output
59	V_{SSLS}	Negative Power Supply Input (3.3V supply, Level Shift)
60	V_{DDZ}	Positive Power Supply Input (2.5V supply, Serializer)
61	V_{SSPLLA}	Negative Power Supply Input (2.5V supply, PLL Analog)
62	V_{DDPLLA}	Positive Power Supply Input (2.5V supply, PLL Analog)
63	VCLK	Video Data Clock Input
64	Reset	Manual Reset Input (High True)

Copyright © 2006–2013, Texas Instruments Incorporated

APPLICATION INFORMATION

Complete details for the SD130ASM evaluation PCB are available on TI's WEB site. This circuit demonstrates the capabilities of the LMH0030 and allows its evaluation in a native configuration. An assembled demonstration board kit, part number SD130EVK, complete with operating instructions, drawing package and list of materials is available. Contact the Interface Products Group or the Serial Digital Video and Interface Applications Group for ordering information. Complete circuit board layouts, schematics and other information for the SD130EVK are also available on TI's WEB site in the application information for this device. For latest product details and availability information, please see: www.ti.com/appinfo/interface.

PCB LAYOUT AND POWER SYSTEM BYPASS RECOMMENDATIONS

Circuit board layout and stack-up for the LMH0030 should be designed to provide noise-free power to the device. Good layout practice also will separate high frequency or high level inputs and outputs to minimize unwanted stray noise pickup, feedback and interference. Power system performance may be greatly improved by using thin dielectrics (4 to 10 mils) for power/ground sandwiches. This increases the intrinsic capacitance of the PCB power system which improves power supply filtering, especially at high frequencies, and makes the value and placement of external bypass capacitors less critical. External bypass capacitors should include both RF ceramic and tantalum electrolytic types. RF capacitors may use values in the range 0.01 µF to 0.1 µF. Tantalum capacitors may be in the range 2.2 µF to 10 µF. Voltage rating for tantalum capacitors should be at least 5X the power supply voltage being used. It is recommended practice to use two vias at each power pin of the LMH0030 as well as all RF bypass capacitor terminals. Dual vias reduce the interconnect inductance by up to half, thereby reducing interconnect inductance and extending the effective frequency range of the bypass components.

The outer layers of the PCB may be flooded with additional V_{SS} (ground) plane. These planes will improve shielding and isolation as well as increase the intrinsic capacitance of the power supply plane system. Naturally, to be effective, these planes must be tied to the V_{SS} power supply plane at frequent intervals with vias. Frequent via placement also improves signal integrity on signal transmission lines by providing short paths for image currents which reduces signal distortion. The planes should be pulled back from all transmission lines and component mounting pads a distance equal to the width of the widest transmission line or the thickness of the dielectric separating the transmission line from the internal power or ground plane(s) whichever is greater. Doing so minimizes effects on transmission line impedances and reduces unwanted parasitic capacitances at component mounting pads.

The LMH0030 uses two power supply voltages, 2.5 and 3.3 volts. These supplies connect to the device through seven sets of independent power input pins. The function and system supplied through these is given in the Pin Description Table. The power supply voltages normally share a common 0 volt or ground return system. Either a split plane or separate power planes can be used to supply the positive voltages to the device.

In especially noisy power supply environments, such as is often the case when using switching power supplies, separate filtering may be used at the LMH0030's PLL analog, PLL digital and serial output driver power pins. The LMH0030 was designed for this situation. The digital section, PLL and output driver power supply feeds are independent. See the Pin Description Table and the Connection Diagram for details. Supply filtering may take the form of L-section or pi-section, L-C filters in series with these V_{DD} inputs. Such filters are available in a single package from several manufacturers. Despite being independent feeds, all device power supplies should be applied simultaneously as from a common source.

Distributor of Texas Instruments: Excellent Integrated System Limited
Datasheet of LMH0030VS/NOPB - IC SERIALIZER VID DGTL 64-TQFP
Contact us: sales@integrated-circuit.com Website: www.integrated-circuit.com

PROCESSING NON-SUPPORTED AND pSf RASTER FORMATS

The number and type of HD raster formats has proliferated greatly since the LMH0030 was designed. Though not specifically capable of fully or automatically processing these new formats, the LMH0030 may still be capable of serializing them. The user is encouraged to experiment with processing of these formats keeping in mind that the LMH0030 has not been tested to handle raster formats other than those detailed in Table 4. Therefore, the results from attempts to process non-supported formats is not ensured. The following guidelines concerning device setup are provided to aid the user in configuring the LMH0030 to attempt limited processing of these other raster formats. In general, the device is configured to defeat its format and TRS detection function and to limit operation to a generic HD format type. (The user should consult Table 4 for guidance on the format groups similar to the non-supported one to be processed). Since these newer formats are in the HD realm, the LMH0030 should be configured to operate in HD-ONLY mode by setting bit-5 of the FORMAT 0 register (address 0Bh). Also, the device should be further configured by loading the FORMAT SET[4:0] bits of this register with a non-specific HD sub-format code. The complete data word for this HD sub-format code with HD-ONLY bit set is 33Fh (all 10 bits of AD[9:0]). Since this format differs from those in the table, the EAV/SAV indicators are disabled. Without these indicators, line numbering and CRC insertion are disabled and ancillary data insertion will not function. Pre-processing of the parallel data ahead of the LMH0030 will be required to insert CRC data and line numbering.

Among the specialized formats are so-called progressive-segmented frame formats (pSf). Refer to SMPTE 274M-2003, Annex A. These formats are composed of the video lines of progressive scan rasters rearranged in the manner of an interlaced raster. The even numbered lines are arranged to form Field 1 and the odd numbered lines form Field 2. In other respects, the format is identical to the normal interlaced format. The LMH0030 can serialize these pSf formats provided that the lines of the original progressive raster are first rearranged externally to the LMH0030 before being presented to it for processing.

 Copyright © 2006–2013, Texas Instruments Incorporated

Distributor of Texas Instruments: Excellent Integrated System Limited
Datasheet of LMH0030VS/NOPB - IC SERIALIZER VID DGTL 64-TQFP
Contact us: sales@integrated-circuit.com Website: www.integrated-circuit.com

REVISION HISTORY

Changes from Revision F (April 2013) to Revision G	Page
• Changed layout of National Data Sheet to TI format	32

Distributor of Texas Instruments: Excellent Integrated System Limited
Datasheet of LMH0030VS/NOPB - IC SERIALIZER VID DGTL 64-TQFP
Contact us: sales@integrated-circuit.com Website: www.integrated-circuit.com

PACKAGE OPTION ADDENDUM

PACKAGING INFORMATION

Orderable Device	Status (1)	Package Type	Package Drawing	Pins	Package Qty	Eco Plan (2)	Lead/Ball Finish (6)	MSL Peak Temp (3)	Op Temp (°C)	Device Marking (4/5)	Samples
LMH0030VS	NRND	TQFP	PAG	64	160	TBD	Call TI	Call TI	0 to 70	L030	
LMH0030VS/NOPB	ACTIVE	TQFP	PAG	64	160	Green (RoHS & no Sb/Br)	CU SN	Level-3-260C-168 HR	0 to 70	L030	Samples

(1) The marketing status values are defined as follows:
ACTIVE: Product device recommended for new designs.
LIFEBUY: TI has announced that the device will be discontinued, and a lifetime-buy period is in effect.
NRND: Not recommended for new designs. Device is in production to support existing customers, but TI does not recommend using this part in a new design.
PREVIEW: Device has been announced but is not in production. Samples may or may not be available.
OBSOLETE: TI has discontinued the production of the device.

(2) Eco Plan - The planned eco-friendly classification: Pb-Free (RoHS), Pb-Free (RoHS Exempt), or Green (RoHS & no Sb/Br) - please check http://www.ti.com/productcontent for the latest availability information and additional product content details.
TBD: The Pb-Free/Green conversion plan has not been defined.
Pb-Free (RoHS): TI's terms "Lead-Free" or "Pb-Free" mean semiconductor products that are compatible with the current RoHS requirements for all 6 substances, including the requirement that lead not exceed 0.1% by weight in homogeneous materials. Where designed to be soldered at high temperatures, TI Pb-Free products are suitable for use in specified lead-free processes.
Pb-Free (RoHS Exempt): This component has a RoHS exemption for either 1) lead-based flip-chip solder bumps used between the die and package, or 2) lead-based die adhesive used between the die and leadframe. The component is otherwise considered Pb-Free (RoHS compatible) as defined above.
Green (RoHS & no Sb/Br): TI defines "Green" to mean Pb-Free (RoHS compatible), and free of Bromine (Br) and Antimony (Sb) based flame retardants (Br or Sb do not exceed 0.1% by weight in homogeneous material)

(3) MSL, Peak Temp. - The Moisture Sensitivity Level rating according to the JEDEC industry standard classifications, and peak solder temperature.

(4) There may be additional marking, which relates to the logo, the lot trace code information, or the environmental category on the device.

(5) Multiple Device Markings will be inside parentheses. Only one Device Marking contained in parentheses and separated by a "~" will appear on a device. If a line is indented then it is a continuation of the previous line and the two combined represent the entire Device Marking for that device.

(6) Lead/Ball Finish - Orderable Devices may have multiple material finish options. Finish options are separated by a vertical ruled line. Lead/Ball Finish values may wrap to two lines if the finish value exceeds the maximum column width.

Important Information and Disclaimer: The information provided on this page represents TI's knowledge and belief as of the date that it is provided. TI bases its knowledge and belief on information provided by third parties, and makes no representation or warranty as to the accuracy of such information. Efforts are underway to better integrate information from third parties. TI has taken and continues to take reasonable steps to provide representative and accurate information but may not have conducted destructive testing or chemical analysis on incoming materials and chemicals. TI and TI suppliers consider certain information to be proprietary, and thus CAS numbers and other limited information may not be available for release.

Distributor of Texas Instruments: Excellent Integrated System Limited
Datasheet of LMH0030VS/NOPB - IC SERIALIZER VID DGTL 64-TQFP
Contact us: sales@integrated-circuit.com Website: www.integrated-circuit.com

In no event shall TI's liability arising out of such information exceed the total purchase price of the TI part(s) at issue in this document sold by TI to Customer on an annual basis.

Distributor of Texas Instruments: Excellent Integrated System Limited
Datasheet of LMH0030VS/NOPB - IC SERIALIZER VID DGTL 64-TQFP
Contact us: sales@integrated-circuit.com Website: www.integrated-circuit.com

PAG (S-PQFP-G64) **PLASTIC QUAD FLATPACK**

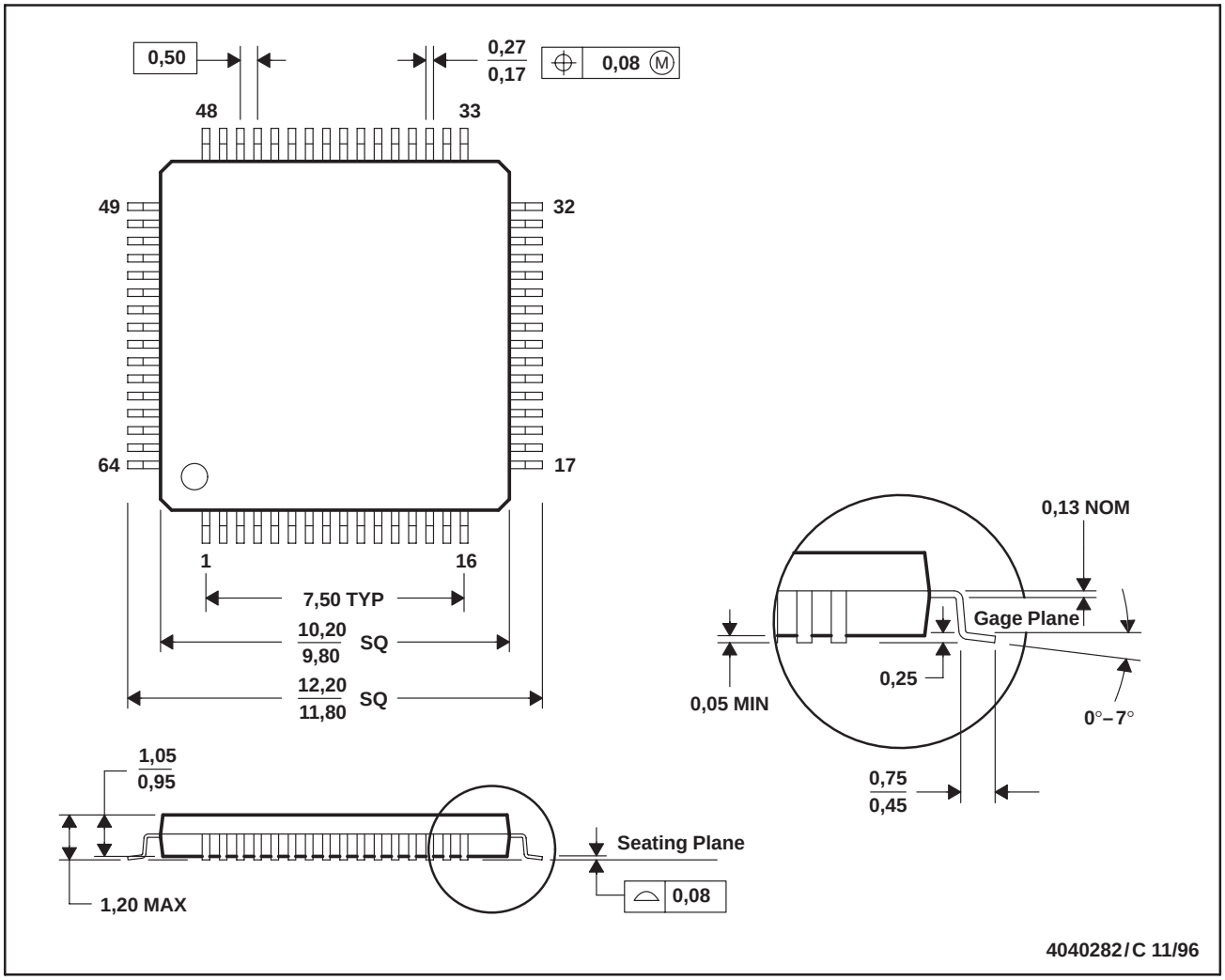

NOTES: A. All linear dimensions are in millimeters.
B. This drawing is subject to change without notice.
C. Falls within JEDEC MS-026

IMPORTANT NOTICE

Texas Instruments Incorporated and its subsidiaries (TI) reserve the right to make corrections, enhancements, improvements and other changes to its semiconductor products and services per JESD46, latest issue, and to discontinue any product or service per JESD48, latest issue. Buyers should obtain the latest relevant information before placing orders and should verify that such information is current and complete. All semiconductor products (also referred to herein as "components") are sold subject to TI's terms and conditions of sale supplied at the time of order acknowledgment.

TI warrants performance of its components to the specifications applicable at the time of sale, in accordance with the warranty in TI's terms and conditions of sale of semiconductor products. Testing and other quality control techniques are used to the extent TI deems necessary to support this warranty. Except where mandated by applicable law, testing of all parameters of each component is not necessarily performed.

TI assumes no liability for applications assistance or the design of Buyers' products. Buyers are responsible for their products and applications using TI components. To minimize the risks associated with Buyers' products and applications, Buyers should provide adequate design and operating safeguards.

TI does not warrant or represent that any license, either express or implied, is granted under any patent right, copyright, mask work right, or other intellectual property right relating to any combination, machine, or process in which TI components or services are used. Information published by TI regarding third-party products or services does not constitute a license to use such products or services or a warranty or endorsement thereof. Use of such information may require a license from a third party under the patents or other intellectual property of the third party, or a license from TI under the patents or other intellectual property of TI.

Reproduction of significant portions of TI information in TI data books or data sheets is permissible only if reproduction is without alteration and is accompanied by all associated warranties, conditions, limitations, and notices. TI is not responsible or liable for such altered documentation. Information of third parties may be subject to additional restrictions.

Resale of TI components or services with statements different from or beyond the parameters stated by TI for that component or service voids all express and any implied warranties for the associated TI component or service and is an unfair and deceptive business practice. TI is not responsible or liable for any such statements.

Buyer acknowledges and agrees that it is solely responsible for compliance with all legal, regulatory and safety-related requirements concerning its products, and any use of TI components in its applications, notwithstanding any applications-related information or support that may be provided by TI. Buyer represents and agrees that it has all the necessary expertise to create and implement safeguards which anticipate dangerous consequences of failures, monitor failures and their consequences, lessen the likelihood of failures that might cause harm and take appropriate remedial actions. Buyer will fully indemnify TI and its representatives against any damages arising out of the use of any TI components in safety-critical applications.

In some cases, TI components may be promoted specifically to facilitate safety-related applications. With such components, TI's goal is to help enable customers to design and create their own end-product solutions that meet applicable functional safety standards and requirements. Nonetheless, such components are subject to these terms.

No TI components are authorized for use in FDA Class III (or similar life-critical medical equipment) unless authorized officers of the parties have executed a special agreement specifically governing such use.

Only those TI components which TI has specifically designated as military grade or "enhanced plastic" are designed and intended for use in military/aerospace applications or environments. Buyer acknowledges and agrees that any military or aerospace use of TI components which have ***not*** been so designated is solely at the Buyer's risk, and that Buyer is solely responsible for compliance with all legal and regulatory requirements in connection with such use.

TI has specifically designated certain components as meeting ISO/TS16949 requirements, mainly for automotive use. In any case of use of non-designated products, TI will not be responsible for any failure to meet ISO/TS16949.

Products		**Applications**	
Audio	www.ti.com/audio	Automotive and Transportation	www.ti.com/automotive
Amplifiers	amplifier.ti.com	Communications and Telecom	www.ti.com/communications
Data Converters	dataconverter.ti.com	Computers and Peripherals	www.ti.com/computers
DLP® Products	www.dlp.com	Consumer Electronics	www.ti.com/consumer-apps
DSP	dsp.ti.com	Energy and Lighting	www.ti.com/energy
Clocks and Timers	www.ti.com/clocks	Industrial	www.ti.com/industrial
Interface	interface.ti.com	Medical	www.ti.com/medical
Logic	logic.ti.com	Security	www.ti.com/security
Power Mgmt	power.ti.com	Space, Avionics and Defense	www.ti.com/space-avionics-defense
Microcontrollers	microcontroller.ti.com	Video and Imaging	www.ti.com/video
RFID	www.ti-rfid.com		
OMAP Applications Processors	www.ti.com/omap	**TI E2E Community**	e2e.ti.com
Wireless Connectivity	www.ti.com/wirelessconnectivity		

Mailing Address: Texas Instruments, Post Office Box 655303, Dallas, Texas 75265
Copyright © 2013, Texas Instruments Incorporated