Excellent Integrated System Limited

Stocking Distributor

Click to view price, real time Inventory, Delivery & Lifecycle Information:

TE Connectivity Aerospace, Defense and Marine
M24308/3-1F

For any questions, you can email us directly:
sales@integrated-circuit.com

tyco Electronics

AMPLIMITE Connectors, Series 109

AMP

Solder Cup, Series 109, Standard Density Connectors

Material and Finish:

Shell — Steel or brass, cadmium plated

Insert — Approved material per MIL-DTL-24308

Contact — Copper alloy, plated gold over copper underplate

Related Product Data:

Cavity Identification — page 5101

Mounting, Mating Specifications — page 5143

Accessories — pages 5148-5150

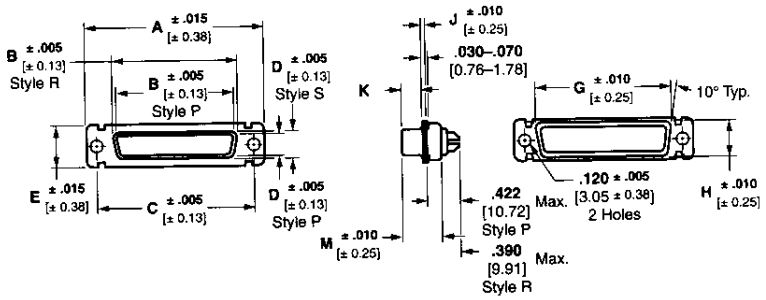

MS Shell Size	Connector Style	Dimensions A	B	C	D	E	G	H	J	K	M
1	Plug	1.213 30.81	.666 16.92	.984 24.99	.329 8.36	.494 12.55	.759 19.28	.422 10.72	.030 0.76	.238/.229 6.09/5.81	.422 10.72
	Receptacle	1.213 30.81	.643 16.33	.984 24.99	.311 7.90	.494 12.55	.759 19.28	.422 10.72	.030 0.76	.248/.238 6.29/6.09	.429 10.90
2	Plug	1.541 39.14	.994 25.25	1.312 33.32	.329 8.36	.494 12.55	1.083 27.51	.422 10.72	.030 0.76	.238/.229 6.09/5.81	.422 10.72
	Receptacle	1.541 39.14	.971 24.66	1.312 33.32	.311 7.90	.494 12.55	1.083 27.51	.422 10.72	.030 0.76	.248/.238 6.29/6.09	.429 10.90
3	Plug	2.088 53.04	1.534 38.96	1.852 47.04	.329 8.36	.494 12.55	1.625 41.28	.422 10.72	.039 0.99	.236/.224 5.99/5.68	.426 10.82
	Receptacle	2.088 53.04	1.511 38.38	1.852 47.04	.311 7.90	.494 12.55	1.625 41.28	.422 10.72	.030 0.76	.248/.238 6.29/6.09	.429 10.90
4	Plug	2.729 69.32	2.182 55.42	2.500 63.5	.329 8.36	.494 12.55	2.272 57.71	.422 10.72	.039 0.99	.236/.224 5.99/5.68	.426 10.82
	Receptacle	2.729 69.32	2.159 54.84	2.500 63.5	.311 7.90	.494 12.55	2.272 57.71	.422 10.72	.030 0.76	.248/.238 6.29/6.09	.429 10.90
5	Plug	2.635 66.93	2.079 52.81	2.406 61.11	.441 11.20	.605 15.37	2.178 55.32	.534 13.56	.039 0.99	.236/.224 5.99/5.68	.426 10.82
	Receptacle	2.635 66.93	2.064 52.43	2.406 61.11	.423 10.74	.605 15.37	2.178 55.32	.534 13.55	.030 0.76	.248/.238 6.29/6.09	.429 10.90

Solder Cup Assemblies

Steel Shells

Contact Style	Shell Size	No. Pos.	Mount	Military Part No. M24308/	AMP Part No.
Receptacle	1	9	Std.	1-1F	593007-1
	2	15	Std.	1-2F	593007-2
	3	25	Std.	1-3F	593007-3
	4	37	Std.	1-4F	593007-4
	5	50	Std.	1-5F	593007-5
Receptacle	1	9	F/F	1-12F	593008-1
	2	15	F/F	1-13F	593008-2
	3	25	F/F	1-14F	593008-3
	4	37	F/F	1-15F	593008-4
	5	50	F/F	1-16F	593008-5
Receptacle	1	9	D/F	1-23F	593009-1
	2	15	D/F	1-24F	593009-2
	3	25	D/F	1-25F	593009-3
	4	37	D/F	1-26F	593009-4
	5	50	D/F	1-27F	593009-5
Plug	1	9	Std.	3-1F	593002-1
	2	15	Std.	3-2F	593002-2
	3	25	Std.	3-3F	593002-3
	4	37	Std.	3-4F	593002-4
	5	50	Std.	3-5F	593002-5
Plug	1	9	F/F	3-12F	593004-1
	2	15	F/F	3-13F	593004-2
	3	25	F/F	3-14F	593004-3
	4	37	F/F	3-15F	593004-4
	5	50	F/F	3-16F	593004-5

Brass Shells (Non-Magnetic)

Contact Style	Shell Size	No. Pos.	Mount	Military Part No. M24308/	AMP Part No.
Receptacle	1	9	Std.	5-1F	593036-1
	2	15	Std.	5-2F	593036-2
	3	25	Std.	5-3F	593036-3
	4	37	Std.	5-4F	593036-4
	5	50	Std.	5-5F	593036-5
Receptacle	1	9	F/F	5-12F	593037-1
	2	15	F/F	5-13F	593037-2
	3	25	F/F	5-14F	593037-3
	4	37	F/F	5-15F	593037-4
	5	50	F/F	5-16F	593037-5
Receptacle	1	9	D/F	5-23F	593038-1
	2	15	D/F	5-24F	593038-2
	3	25	D/F	5-25F	593038-3
	4	37	D/F	5-26F	593038-4
	5	50	D/F	5-27F	593038-5
Plug	1	9	Std.	7-1F	593057-1
	2	15	Std.	7-2F	593057-2
	3	25	Std.	7-3F	593057-3
	4	37	Std.	7-4F	593057-4
	5	50	Std.	7-5F	593057-5
Plug	1	9	F/F	7-12F	593058-1
	2	15	F/F	7-13F	593058-2
	3	25	F/F	7-14F	593058-3
	4	37	F/F	7-15F	593058-4
	5	50	F/F	7-16F	593058-5

Mounting Abbreviations: Std. = Standard, F/F = Front Float, D/F - Dual Float
Note: The suffix "F" on M24308 part numbers designates cadmium shell plating.

Catalog 1308940
Revised 5-03

www.tycoelectronics.com

Dimensions are in inches and millimeters unless otherwise specified. Values in brackets are metric equivalents.

Dimensions are shown for reference purposes only. Specifications subject to change.

USA: 1-800-522-6752
Canada: 1-905-470-4425
Mexico: 01-800-733-8926
C. America: 52-55-5-729-0425

South America: 55-11-3611-1514
Hong Kong: 852-2735-1628
Japan: 81-44-844-8013
UK: 44-141-810-8967