Excellent Integrated System Limited

Stocking Distributor

Click to view price, real time Inventory, Delivery & Lifecycle Information:

AVX Corporation
108447032001025

For any questions, you can email us directly:
sales@integrated-circuit.com

Male Style E

Series 8447 – 3 rows (3 x 16)

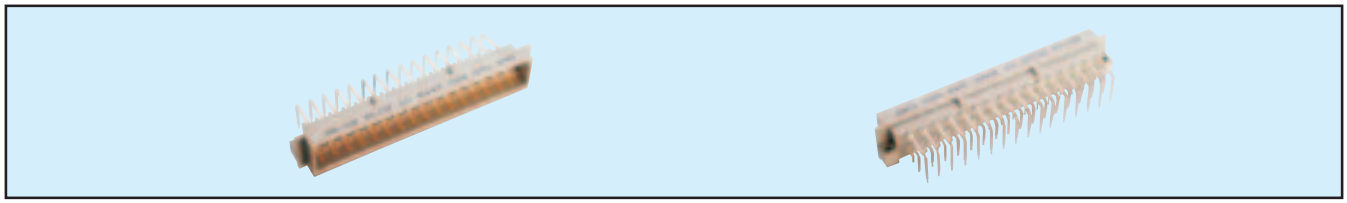

Contact Design and Termination Length	Number of Contacts	Loading Description	Part Number Performance classes according to DIN 41612 II	I
3.0 mm (Y) (0.6 x 0.6 mm) Right Angled Pitch 5.08	48	a + c + e fully loaded	10 8447 048 001 025	10 8447 048 001 049
3.0 mm (Y) (0.6 x 0.6 mm) Right Angled Pitch 2.54	48	a + c + e fully loaded	10 8447 048 002 025	10 8447 048 002 049

NB: Alternative Prefix Variations Available: 12, please refer to Page 10.
Additional Plating & Loading Variations: Please contact your local AVX sales office or distributor.

LOADING DESCRIPTION

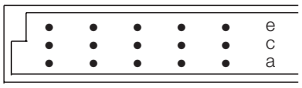

48 contacts, rows a + c + e fully loaded

Ground pin not available

DIMENSIONS

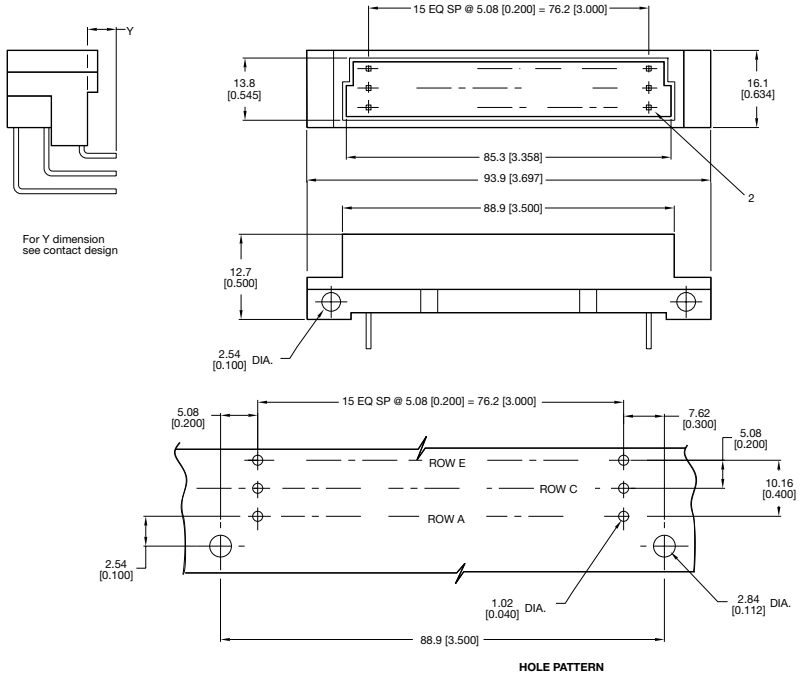

Part Numbering Format

10 8457 096 002 025

PREFIX VARIATIONS

10 Male without keying system
11 Male Press-Fit without flanges, without keying system
12 Male with keying system
13 Male Press-Fit without flanges, with keying system
16 Male with 1.6mm board retention clip without keying system
17 Male with 1.6mm board retention clip with keying system

20 Female without keying system
21 Female Press-Fit without flanges, without keying system
22 Female with keying system
23 Female Press-Fit without flanges, with keying system
26 Female with 1.6mm board retention clip without keying system
27 Female with 1.6mm board retention clip with keying system
00 Special Device

SERIES NUMBER

NUMBER OF CONTACT CAVITIES

Ex: 096 = 96 cavities
128 = 128 cavities
160 = 160 cavities

CONTACT VARIATIONS

Tail lengths, Lead styles etc.

PERFORMANCE CLASS AND LOADING VARIATIONS

Class	M55302 Class I	DIN 41612 Class II	DIN 41612 Class III
Cycle Life	500+ Mating Cycles	400 Mating Cycles	50 Mating Cycles

QUALIFIED MILITARY PART NUMBERS

Military Designation	
M55302/131-01	M55302/134-02
M55302/131-02	M55302/134-04
M55302/132-01	M55302/134-05
M55302/132-02	M55302/134-07
M55302/132-03	M55302/134-08
M55302/132-04	M55302/157-01
M55302/132-05	M55302/157-02
M55302/132-06	M55302/157-03
M55302/133-01	M55302/157-04
M55302/133-02	M55302/158-01
M55302/133-03	M55302/158-02
M55302/134-01	

Technical Specifications

inches (mm)

SERIES 8254/8459 8457/8458 8477/8478 8483/8484	Basic Grid	0.100 (2.54) x 0.100 (2.54) - 0.100 (2.54) x 0.200 (5.08)
	Insertion Force	3.0 oz./.83 N average per contact pair (20.23/90N max. for 96 contacts)
	Withdrawal Force	Average per contact pair (.54 oz./0.15N min. per contact)
	Contact Positions	2 x 16, 2 x 32, 3 x 10, 3 x 16, 3 x 32, 3 x 50, 4 x 32, 4 x 50, 5 x 32
	Contact Resistance	20 milliohms max.
	Current Rating* (see note)	3 amperes @ 20°C max. on connectors up to 96 contacts
		1 ampere max. on connectors from 100 to 201 contacts
	Insulation Resistance	5,000 megohms min. at 500 VDC
	Dielectric Withstanding	1,000 VAC rms at sea level
	Operating Temperature	-65°C to +125°C
	Insulator Material	Thermoplastic polyester (GF), 94 V-O, UL rated
	Socket Contact Material	Phosphor bronze
	Pin Contact Material	Copper tin
	Wrap Post Dimension	0.024 x 0.024 (0.6 mm x 0.6 mm)
	Push-Out Force of Post in Insulator	3 lbs.
	Contact Plating	DIN performance classes
SERIES 8447	Basic Grid	0.200 (5.08) x 0.200 (5.08)
	Insertion Force	4.0 oz./1.11 N average per contact pair (9.0 lbs./40N max. for 32 contacts)
	Withdrawal Force	Average per contact pair (.54 oz./0.15N min. per contact)
	Contact Positions	2 x 16, 3 x 16
	Contact Resistance	15 milliohms max.
	Current Rating* (see note)	5.5 amperes @ 20°C max.
	Insulation Resistance	5,000 megohms min. at 500 VDC
	Dielectric Withstanding	1,550 VAC rms at sea level
	Operating Temperature	-65°C to +125°C
	Insulator Material	Thermoplastic (GI), 94 V-O, UL Rated
	Pin Contact Material	Copper alloy
	Wrap Post Dimension	1.0 mm x 1.0 mm
	Contact Plating	DIN performance classes
SERIES 8557/8577	Basic Grid	0.100 (2.54) x 0.100 (2.54) - 0.100 (2.54) x 0.200 (5.08)
	Insertion Force	3.0 oz./.83 N average per contact pair (20.23/90N max. for 96 contacts)
	Withdrawal Force	Average per contact pair (.54 oz./0.15N min. per contact)
	Contact Positions	3 x 16, 3 x 32, 4 x 32, (inverted receptacle)
	Contact Resistance	20 milliohms max.
	Current Rating* (see note)	3 amperes @ 20°C max. on connectors up to 96 contacts
	Insulation Resistance	5,000 megohms min. at 500 VDC
	Dielectric Withstanding	1,000 VAC rms at sea level
	Operating Temperature	-65°C to +125°C
	Insulator Material	Surface mount compatible polymers, 94 V-O, UL Rated
	Socket Contact Material	Phosphor bronze
	Pin Contact Material	Copper alloy
	Wrap Post Dimension	0.024 x 0.024 (0.6 mm x 0.6 mm)
	Push-Out Force of Post in Insulator	3 lbs.
	Contact Plating	DIN performance classes
	Solder Temperature	max. 250°C

*Current Rating: UL approval allows that DIN connectors up to 96 contacts be rated at 3 amperes. Over 96 pins must be derated to 1.0 ampere maximum VDE, CSA, and other European standards rate all DIN and DIN type connectors at 1 ampere maximum when they are on an 0.100 (2.54) x 0.100 (2.54) grid. (UL file # E27610 Vol. #1 Section #6)

Technical Specifications

inches (mm)

SERIES 8449/8450 8456/8454 8487	Basic Grid	0.200 (5.08) x 0.200 (5.08)
	Insertion Force	4.0 oz./1.11 N average per contact pair (9.0 lbs./40N max. for 32 contacts)
	Withdrawal Force	Average per contact pair (.54 oz./0.15N min. per contact)
	Contact Positions	2 x 5 + 2, 3 x 16, 1 x 11, 1 x 7, 1 x 8
	Contact Resistance	15 milliohms max.
	Current Rating* (see note)	5.5 amperes @ 20°C max. (8456)
	Insulation Resistance	5,000 megohms min. at 500 VDC
	Dielectric Withstanding	1,550 VAC rms at sea level
	Operating Temperature	-65°C to +125°C
	Insulator Material	Polycarbonate (GF)
	Pin Contact Material	Copper alloy
	Wrap Post Dimension	N/A
	Contact Plating	DIN performance classes

*Current Rating: UL approval allows that DIN connectors up to 96 contacts be rated at 3 amperes. Over 96 pins must be derated to 1.0 ampere maximum VDE, CSA, and other European standards rate all DIN and DIN type connectors at 1 ampere maximum when they are on an 0.100 (2.54) x 0.100 (2.54) grid. (UL file # E27610 Vol. #1 Section #6)