# Excellent Integrated System Limited

Stocking Distributor

Click to view price, real time Inventory, Delivery & Lifecycle Information:

International Rectifier (Infineon Technologies Americas Corp.)
IPS1041LPBF

For any questions, you can email us directly:
sales@integrated-circuit.com

Distributor of International Rectifier (Infineon Technologies Americas Corp.): Excellent In
Datasheet of IPS1041LPBF - INTELLIGENT POWER SW 1CH SOT223
Contact us: sales@integrated-circuit.com Website: www.integrated-circuit.com

International Rectifier

Data Sheet No. PD60296_B

# IPS1041(L)(R)PbF / IPS1042GPbF

## SINGLE/DUAL CHANNEL INTELLIGENT POWER LOW SIDE SWITCH

### Features

- Over temperature shutdown
- Over current shutdown
- Active clamp
- Low current & logic level input
- ESD protection
- Optimized Turn On/Off for EMI
- Diagnostic on the input current

### Product Summary

| | |
|---|---|
| Rds(on) | 100mΩ (max.) |
| Vclamp | 39V |
| Ishutdown | 4.5A (typ.) |

### Description

The IPS1041(L)(R)PbF and IPS1042GPbF are three terminal Intelligent Power Switches (IPS) featuring low side MOSFETs with over-current, over-temperature, ESD protection and drain to source active clamp. The IPS1042G is a dual channel device while the IPS1041 is a single channel. These devices offer protections and the high reliability required in harsh environments. Each switch provides efficient protection by turning OFF the power MOSFET when the temperature exceeds 165°C or when the drain current reaches 4.5A. The device restarts once the input is cycled. A serial resistance connected to the input provides the diagnostic. The avalanche capability is significantly enhanced by the active clamp and covers most inductive load demagnetizations.

### Packages

| SOT-223 | SO-8 | D-Pak |
|---|---|---|
| IPS1041LPbF | IPS1042GPbF | IPS1041RPbF |

### Typical Connection

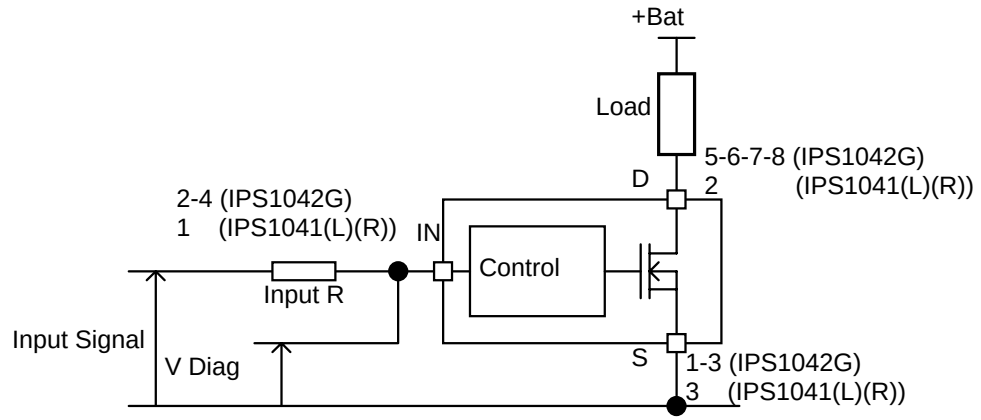

## Absolute Maximum Ratings

Absolute maximum ratings indicate sustained limits beyond which damage to the device may occur. All voltage parameters are referenced to Ground lead. (Tambient=25°C unless otherwise specified).

| Symbol | Parameter | Min. | Max. | Units |
|---|---|---|---|---|
| Vds | Maximum drain to source voltage | -0.3 | 36 | V |
| Vds cont | Maximum continuous drain to source voltage | - | 28 | V |
| Vin | Maximum input voltage | -0.3 | 6 | V |
| Isd cont. | Max diode continuous current (limited by thermal dissipation) | — | 1.5 | A |
| Pd | Maximum power dissipation (internally limited by thermal protection) Rth=60°C/W IPS1041L 1" sqr. footprint | | 2 | W |
| | Rth=100°C/W IPS1042G std. footprint | | 1.25 | |
| ESD | Electrostatic discharge voltage (Human body) C=100pF, R=1500Ω Between drain and source | — | 4 | kV |
| | Other combinations | — | 3 | |
| | Electrostatic discharge voltage (Machine Model) C=200pF,R=0Ω Between drain and source | — | 0.5 | |
| | Other combinations | — | 0.3 | |
| Tj max. | Max. storage & operating temperature junction temperature | -40 | 150 | °C |
| Tsoldering | Lead soldering temperature (10 seconds) | — | 300 | °C |

## Thermal Characteristics

| Symbol | Parameter | Typ. | Max. | Units |
|---|---|---|---|---|
| Rth1 | Thermal resistance junction to ambient IPS1041L SOT-223 std. footprint | 100 | — | °C/W |
| Rth2 | Thermal resistance junction to ambient IPS1041L SOT-223 1" sqr. footprint | 60 | — | |
| Rth1 | Thermal resistance junction to ambient IPS1041R D-Pak std. footprint | 70 | — | |
| Rth2 | Thermal resistance junction to case IPS1041R D-Pak | 6 | — | |
| Rth1 | Thermal resistance junction to ambient IPS1042G SO-8 std. Footprint 1 die active | 100 | — | |
| Rth1 | Thermal resistance junction to ambient IPS1042G SO-8 std. footprint 2 die active | 130 | — | |

## Recommended Operating Conditions

These values are given for a quick design. For operation outside these conditions, please consult the application notes.

| Symbol | Parameter | Min. | Max. | Units |
|---|---|---|---|---|
| VIH | High level input voltage | 4.5 | 5.5 | V |
| VIL | Low level input voltage | 0 | 0.5 | |
| Ids | Continuous drain current, Tambient=85°C, Tj=125°C, Vin=5V Rth=60°C/W IPS1041L 1" sqr. Footprint | — | 1.95 | A |
| | Continuous drain current, Tambient=85°C, Tj=125°C, Vin=5V Rth=50°C/W IPS1041R 1" sqr. Footprint | — | 2.2 | |
| | Continuous drain current, Tambient=85°C, Tj=125°C, Vin=5V Rth=100°C/W IPS1042G 1" sqr. Footprint - 1 die active | — | 1.5 | |
| | Continuous drain current, Tambient=85°C, Tj=125°C, Vin=5V Rth=130°C/W IPS1042G 1" sqr. Footprint - 2 die active | | 0.7 | |
| Rin | Recommended resistor in series with IN pin to generate a diagnostic | 0.5 | 10 | kΩ |
| Max L | Max. recommended load inductance ( including line inductance ) (1) | — | 20 | µH |
| Max. F | Max. frequency | — | 2000 | Hz |
| Max. t rise | Max. input rising time | — | 1 | µs |

(1) Higher inductance is possible if maximum load current is limited - see figure 11

## Static Electrical Characteristics

Tj=25°C, Vcc=14V (unless otherwise specified)

| Symbol | Parameter | Min. | Typ. | Max. | Units | Test Conditions |
|---|---|---|---|---|---|---|
| Rds(on) | ON state resistance Tj=25°C | — | 80 | 100 | mΩ | Vin=5V, Ids=3A |
| | ON state resistance Tj=150°C | — | 135 | 175 | | |
| Idss1 | Drain to source leakage current | — | 0.1 | 5 | µA | Vcc=14V, Tj=25°C |
| Idss2 | Drain to source leakage current | — | 0.2 | 10 | | Vcc=28V, Tj=25°C |
| V clamp1 | Drain to source clamp voltage 1 | 36 | 38 | — | V | Id=10mA |
| V clamp2 | Drain to source clamp voltage 2 | — | 39 | 42 | | Id=1A |
| Vin clamp | IN to source pin clamp voltage | 5.5 | 6.5 | 7.5 | | Iin=1mA |
| Vth | Input threshold voltage | — | 1.7 | — | | Id=10mA |

## Switching Electrical Characteristics

Vcc=14V, Resistive load=5Ω, Rinput=0Ω, Vin=5V, Tj=25°C

| Symbol | Parameter | Min. | Typ. | Max. | Units | Test Conditions |
|---|---|---|---|---|---|---|
| Tdon | Turn-on delay time to 20% | 3 | 10 | 23 | µs | See figure 2 |
| Tr | Rise time 20% to 80% | 2 | 7 | 20 | | |
| Tdoff | Turn-off delay time to 80% | 15 | 40 | 150 | | |
| Tf | Fall time 80% to 20% | 4 | 10 | 20 | | |
| Eon + Eoff | Turn on and off energy | — | 0.2 | — | mJ | |

## Protection Characteristics

| Symbol | Parameter | Min. | Typ. | Max. | Units | Test Conditions |
|---|---|---|---|---|---|---|
| Tsd | Over temperature threshold | 150(2) | 165 | — | °C | See figure 1 |
| Isd | Over current threshold | 3 | 4.5 | 6 | A | See figure 1 |
| OV | Over voltage protection ( not active when the device is ON ) | 34 | 37 | — | V | |
| Vreset | IN protection reset threshold | — | 1.7 | — | V | |
| Treset | Time to reset protection | 15(2) | 50 | 200 | µs | Vin=0V, Tj=25°C |

(2) Guaranteed by design

## Diagnostic

| Symbol | Parameter | Min. | Typ. | Max. | Units | Test Conditions |
|---|---|---|---|---|---|---|
| Iin, on | ON state IN positive current | 15 | 32 | 70 | µA | Vin=5V |
| Iin, off | OFF state IN positive current ( after protection latched ) | 150 | 230 | 350 | | Vin=5V |

## Lead Assignments

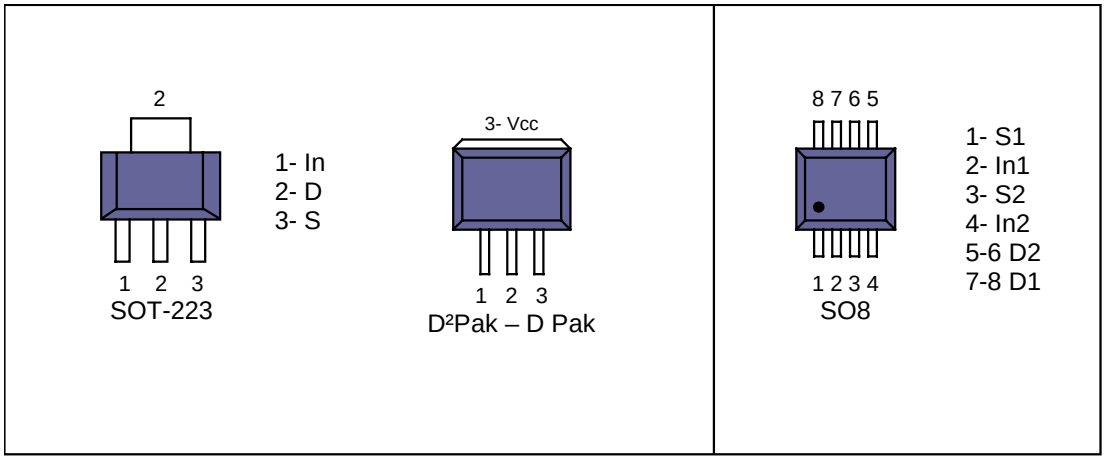


## Functional Block Diagram

All values are typical

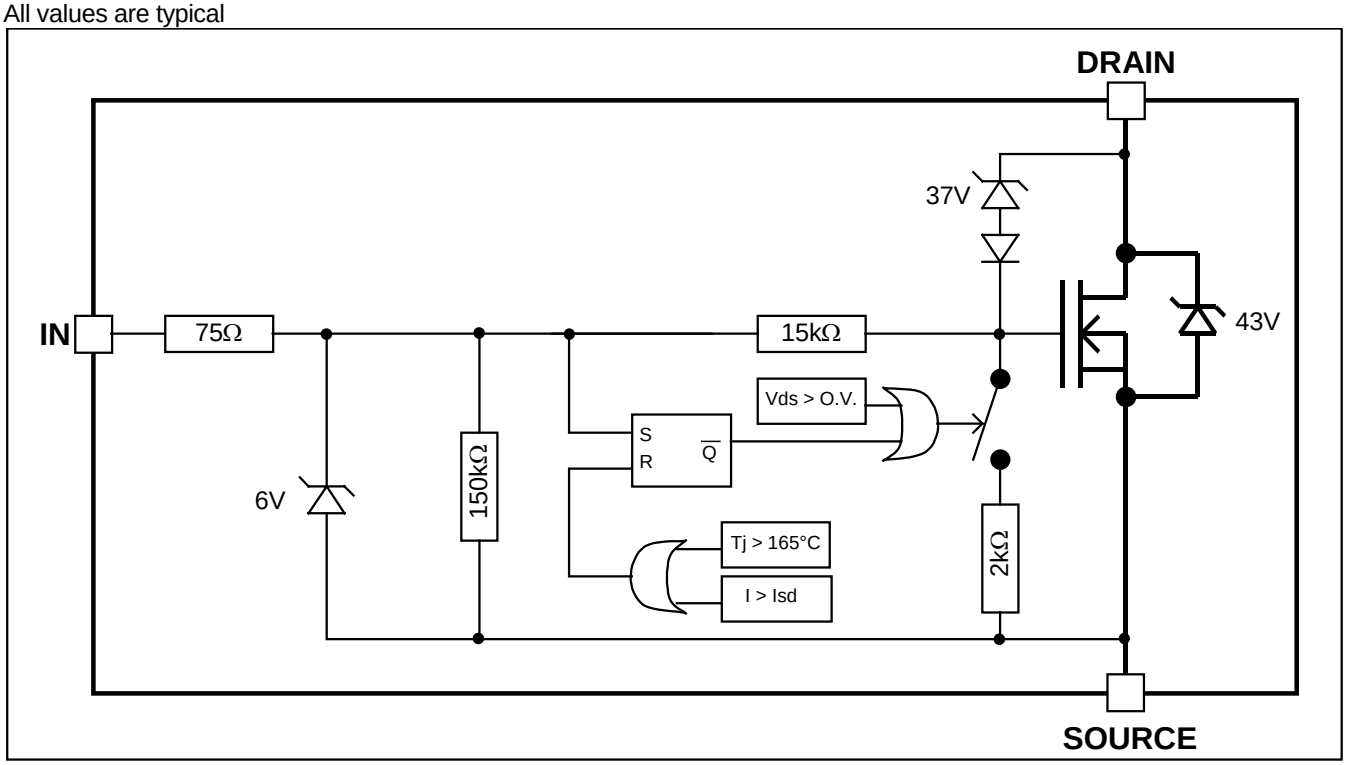

All curves are typical values. Operating in the shaded area is not recommended.

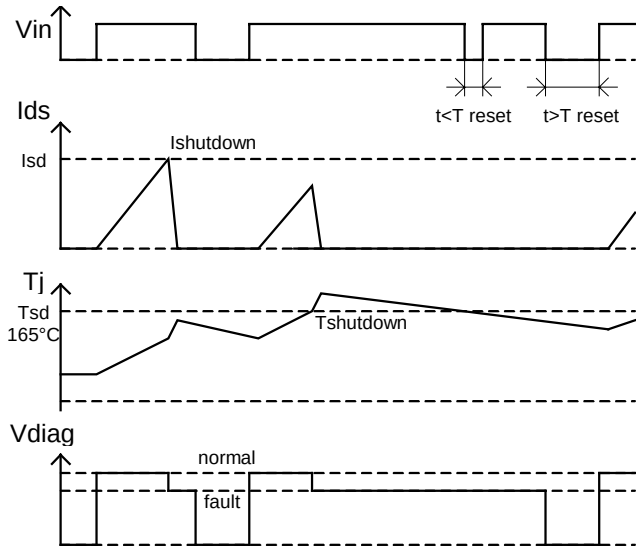


**Figure 1 – Timing diagram**

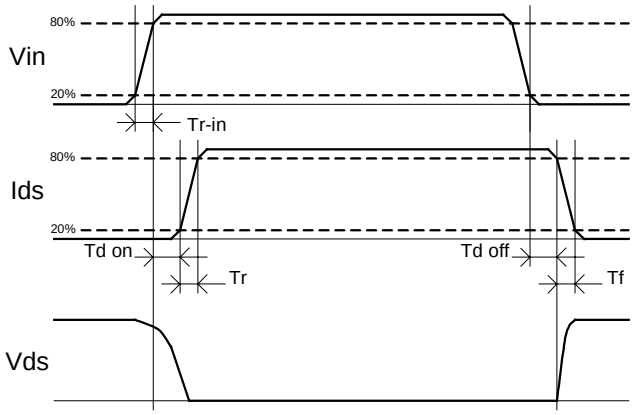


**Figure 2 – IN rise time & switching definitions**

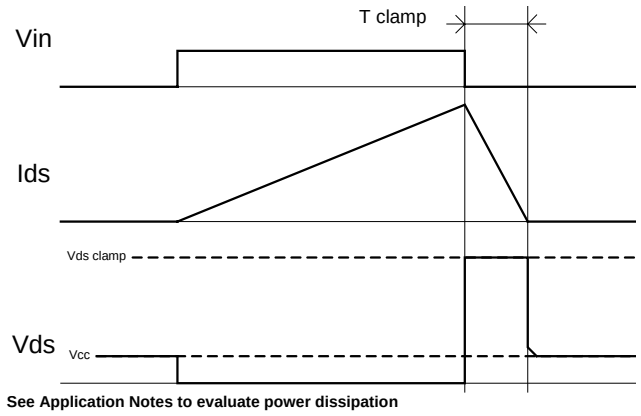


**Figure 3 – Active clamp waveforms**

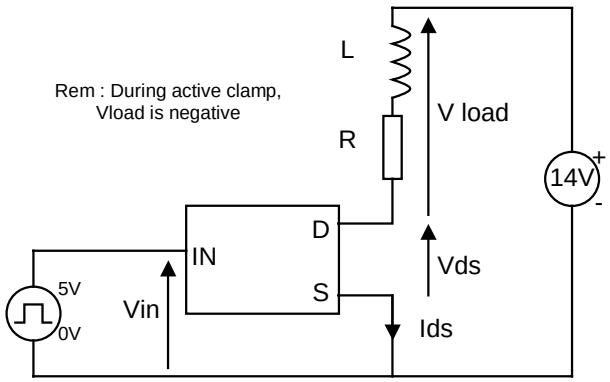


**Figure 4 – Active clamp test circuit**

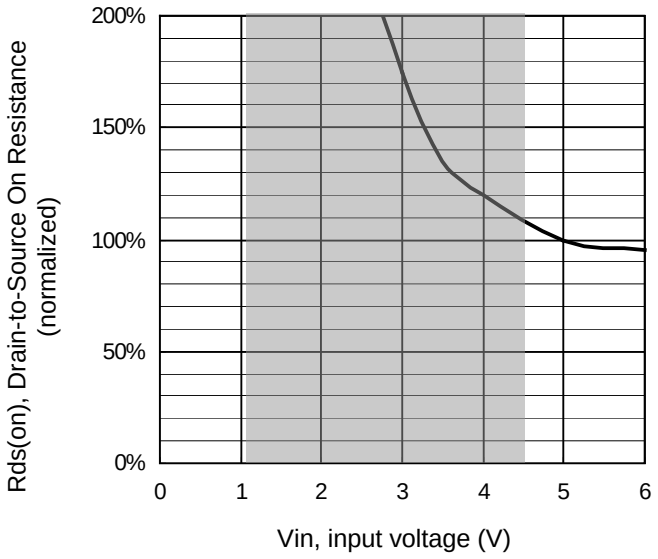


**Figure 5 – Normalized Rds(on) (%) Vs Input voltage (V)**

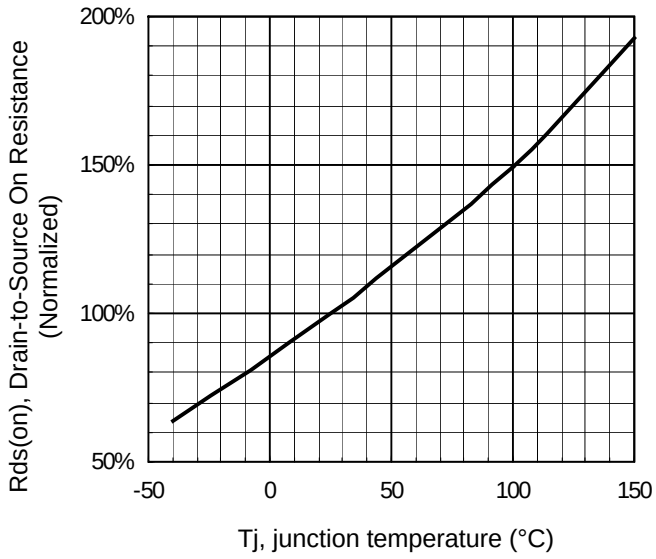


**Figure 6 - Normalized Rds(on) (%) Vs Tj (°C)**

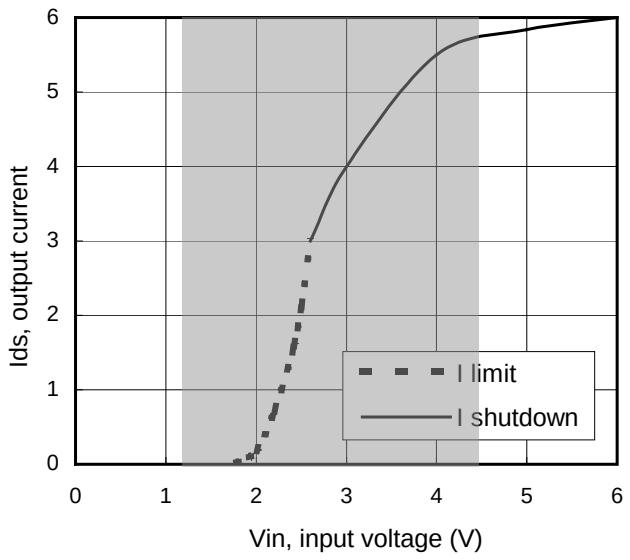


**Figure 7 – Current limitation and current shutdown Vs Input voltage (V)**

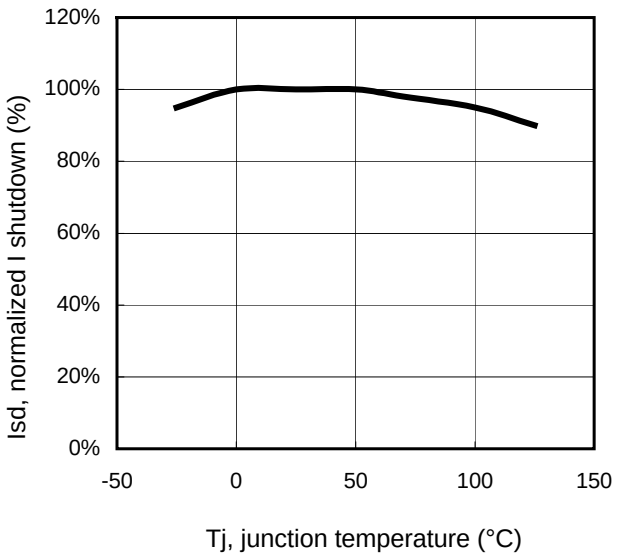


**Figure 8 – Normalized I shutdown (%) Vs junction temperature (°C)**

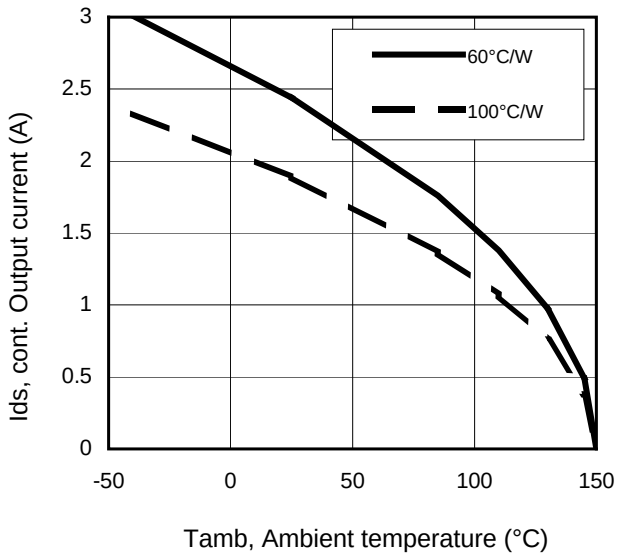


**Figure 9 – Max. continuous output current (A) Vs Ambient temperature (°C)**

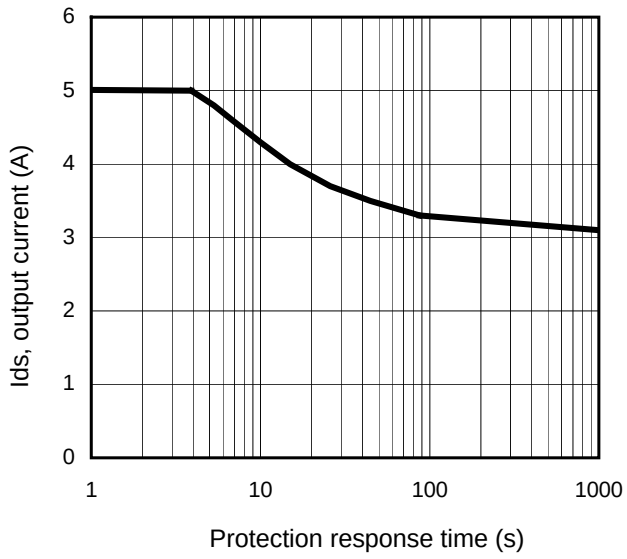


**Figure 10 – Ids (A) Vs over temperature protection response time (s) / IPS1041L**

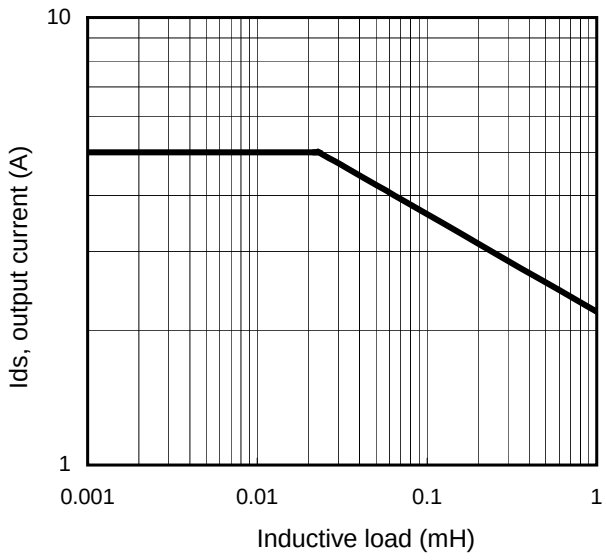


**Figure 11 – Max. ouput current (A) Vs Inductive load (mH)**

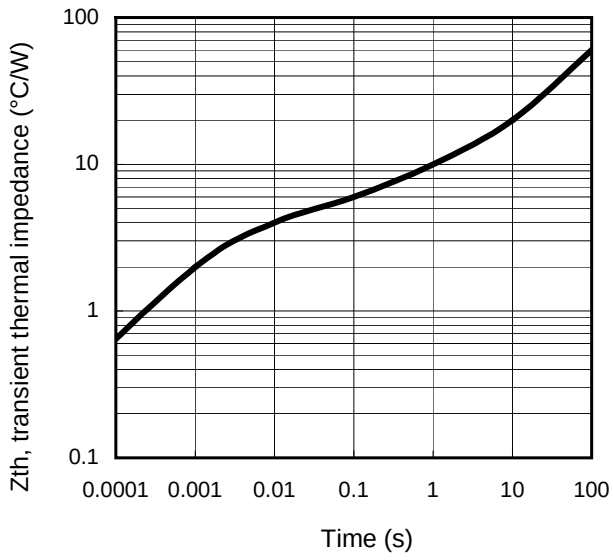


**Figure 12 – Transient thermal impedance (°C/W) Vs time (s)**

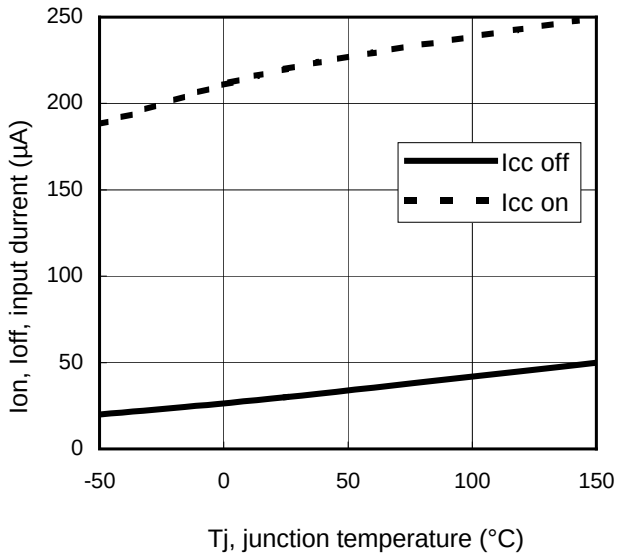


**Figure 13 – Input current (µA) On and Off Vs junction temperature (°C)**

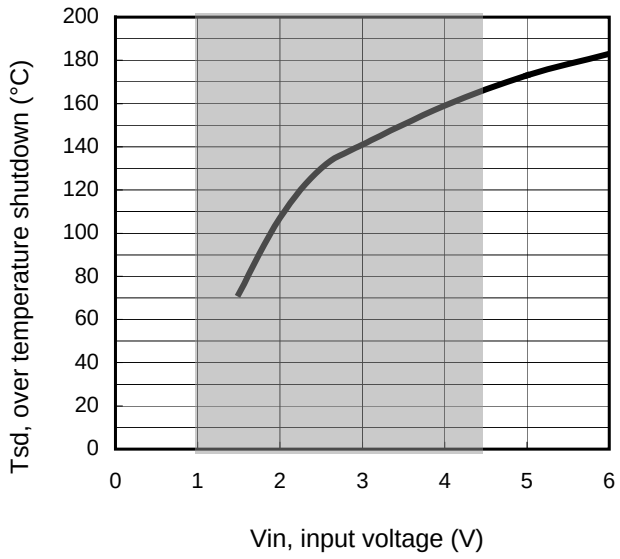


**Figure 14 – Over temperature shutdown (°C) Vs input voltage (V)**

International
IOR Rectifier

# IPS1041(L)(R)PbF / IPS1042GPbF

## Case Outline - SOT-223 - Automotive Q100 PbF MSL2 qualified

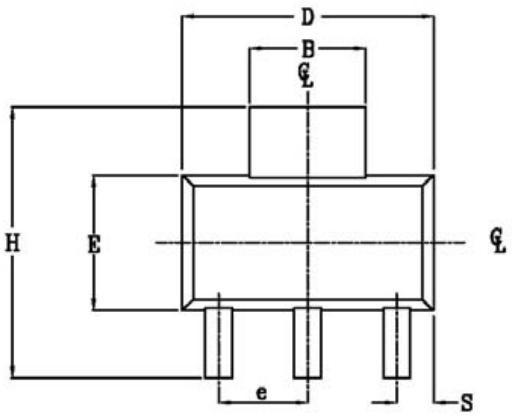


| POS | MILLIMETERS | | INCHES | |
|---|---|---|---|---|
| 1 | MAX | MIN | MAX | MIN |
| A | 1.70 | 1.50 | .067 | .060 |
| A1 | 0.10 | 0.02 | .004 | .0008 |
| B | 3.15 | 2.95 | .124 | .116 |
| B1 | 0.85 | 0.65 | .033 | .026 |
| C | 0.35 | 0.25 | .014 | .010 |
| D | 6.70 | 6.30 | .264 | .248 |
| e | 2.30 NOM | | .0905 NOM | |
| e1 | 4.60 NOM | | .181 NOM | |
| E | 3.70 | 3.30 | .146 | .130 |
| H | 7.30 | 6.70 | .287 | .264 |
| S | 1.05 | 0.85 | .041 | .033 |
| t | 1.30 | 1.10 | .051 | .043 |
| Θ | 10° MAX | | 10° MAX | |
| Θ1 | 16° | 10° | 16° | 10° |
| Θ2 | 16° | 10° | 16° | 10° |
| L | 0.75 MIN | | 0.0295 MIN | |

NOTE:
1. PACKAGE OUTLINE EXCLUSIVE OF ANY MOLD FLASHES DIMENSION.
2. PACKAGE OUTLINE EXCLUSIVE OF BURR DIMENSION.

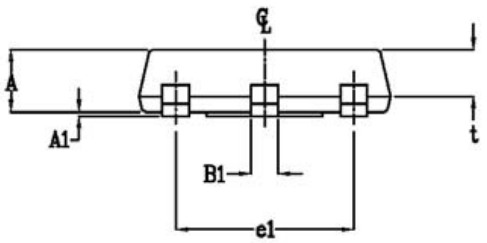


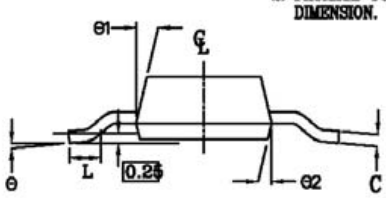


Leads and drain are plated with 100% Sn

International
IOR Rectifier

# IPS1041(L)(R)PbF / IPS1042GPbF

## Tape & Reel - SOT-223

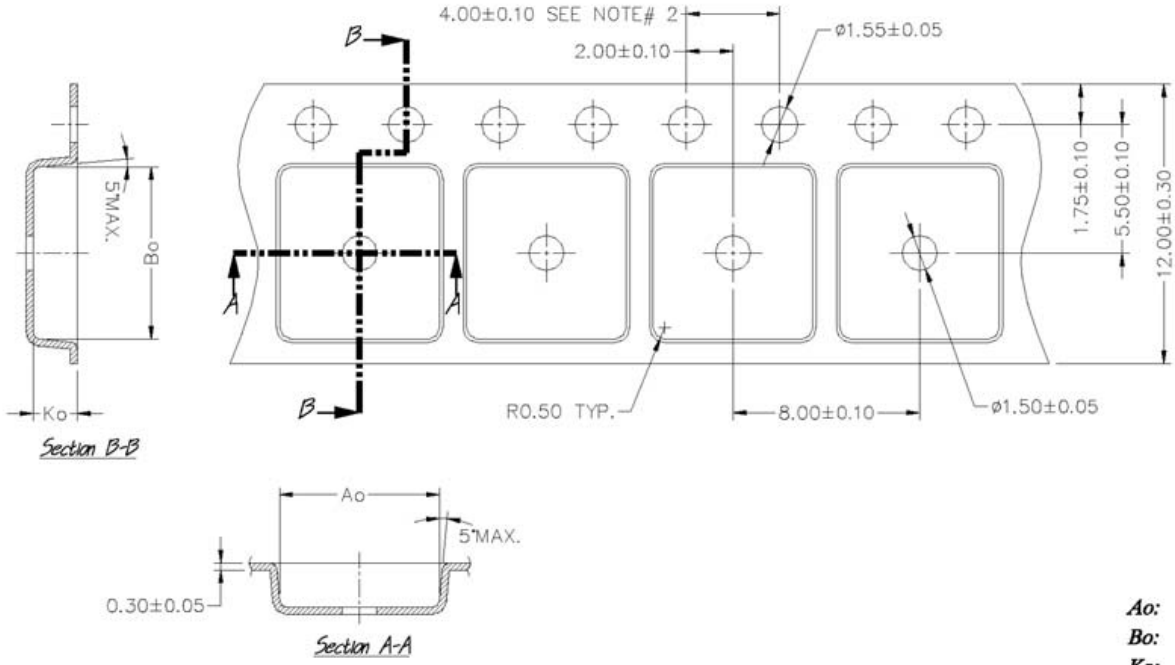


NOTES:
1. Ao & Bo are measured at 0.3mm above base of pocket.
2. 10 picthes cumulative tol. ±0.2mm.

| | |
|---|---|
| Ao: | 6.85 |
| Bo: | 7.40 |
| Ko: | 1.90 |
| Pitch: | 8.00 |
| Width: | 12.00 |

International
IOR Rectifier

# IPS1041(L)(R)PbF / IPS1042GPbF

## Case Outline - SO-8 - Automotive Q100 PbF MSL2 qualified

Dimensions are shown in millimeters (inches)

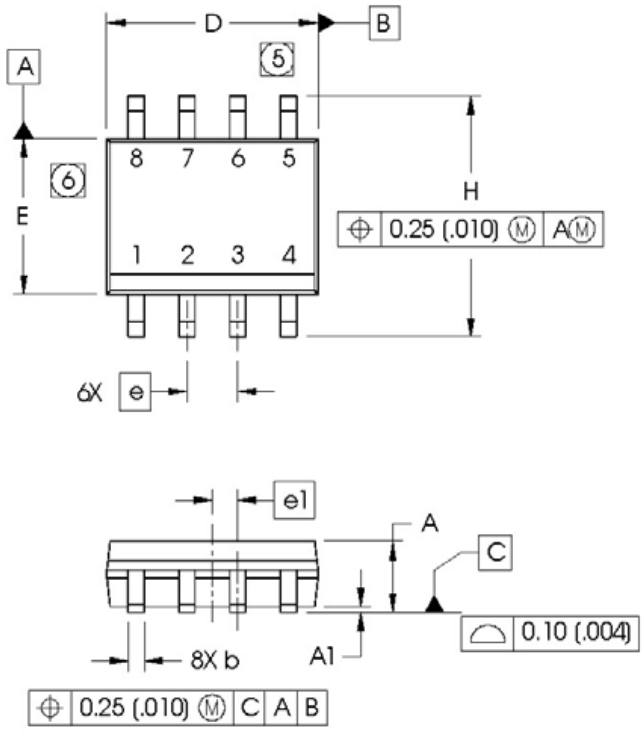


| DIM | INCHES | | MILLIMETERS | |
|---|---|---|---|---|
| | MIN | MAX | MIN | MAX |
| A | .0532 | .0688 | 1.35 | 1.75 |
| A1 | .0040 | .0098 | 0.10 | 0.25 |
| b | .013 | .020 | 0.33 | 0.51 |
| c | .0075 | .0098 | 0.19 | 0.25 |
| D | .189 | .1968 | 4.80 | 5.00 |
| E | .1497 | .1574 | 3.80 | 4.00 |
| e | .050 BASIC | | 1.27 BASIC | |
| e 1 | .025 BASIC | | 0.635 BASIC | |
| H | .2284 | .2440 | 5.80 | 6.20 |
| K | .0099 | .0196 | 0.25 | 0.50 |
| L | .016 | .050 | 0.40 | 1.27 |
| y | 0° | 8° | 0° | 8° |

NOTES:

1. DIMENSIONING & TOLERANCING PER ASME Y14.5M-1994.
2. CONTROLLING DIMENSION: MILLIMETER
3. DIMENSIONS ARE SHOWN IN MILLIMETERS [INCHES].
4. OUTLINE CONFORMS TO JEDEC OUTLINE MS-012AA.
5. DIMENSION DOES NOT INCLUDE MOLD PROTRUSIONS. MOLD PROTRUSIONS NOT TO EXCEED 0.15 [.006].
6. DIMENSION DOES NOT INCLUDE MOLD PROTRUSIONS. MOLD PROTRUSIONS NOT TO EXCEED 0.25 [.010].
7. DIMENSION IS THE LENGTH OF LEAD FOR SOLDERING TO A SUBSTRATE.

FOOTPRINT

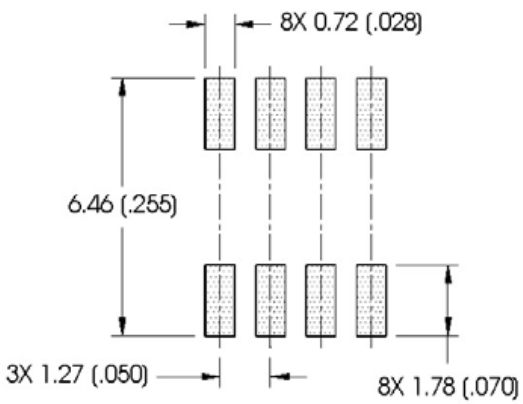


Leads and drain are plated with 100% Sn

## Tape & Reel - SO-8

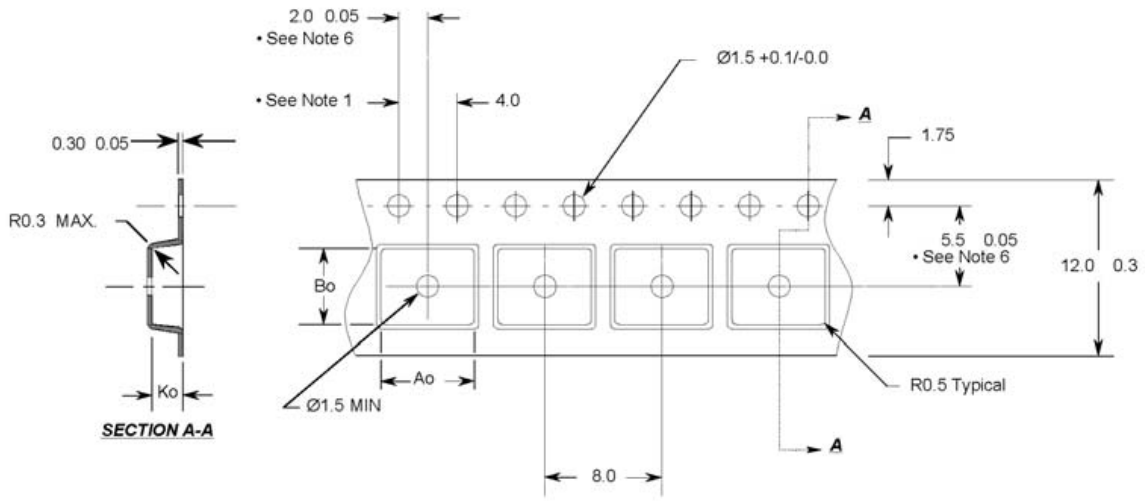


**Notes:**
1. 10 sprocket hole pitch cumulative tolerance 0.2
2. Camber not to exceed 1mm in 100mm
3. Material: Black Conductive Advantek Polystyrene
4. Ao and Bo measured on a plane 0.3mm above the bottom of the pocket
5. Ko measured from a plane on the inside bottom of the pocket to the top surface of the carrier.
6. Pocket position relative to sprocket hole measured as true position of pocket, not pocket hole.

Ao = 6.4 mm
Bo = 5.2 mm
Ko = 2.1 mm

- All Dimensions in Millimeters -

International
IOR Rectifier

# IPS1041(L)(R)PbF / IPS1042GPbF

## Case Outline – D-Pak - Automotive Q100 PbF MSL1 qualified

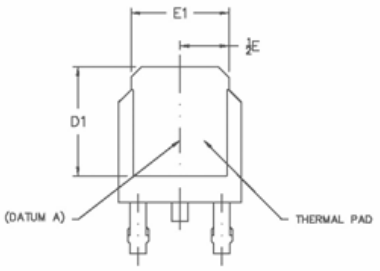


VIEW A–A

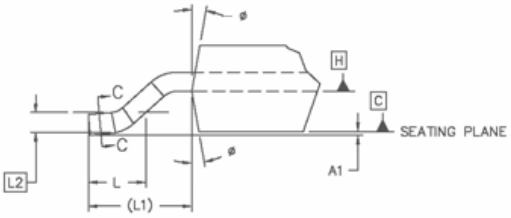


DETAIL "A"
ROTATED 90°

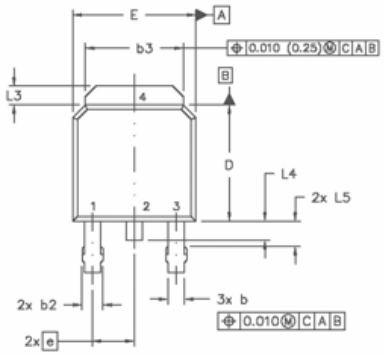


| SYMBOL | DIMENSIONS | | | | NOTES |
|---|---|---|---|---|---|
| | MILLIMETERS | | INCHES | | |
| | MIN. | MAX. | MIN. | MAX. | |
| A | 2.18 | 2.39 | .086 | .094 | |
| A1 | | 0.13 | | .005 | |
| b | 0.64 | 0.89 | .025 | .035 | 5 |
| b1 | 0.64 | 0.79 | .025 | 0.031 | 5 |
| b2 | 0.76 | 1.14 | .030 | .045 | |
| b3 | 4.95 | 5.46 | .195 | .215 | |
| c | 0.46 | 0.61 | .018 | .024 | 5 |
| c1 | 0.41 | 0.56 | .016 | .022 | 5 |
| c2 | .046 | 0.89 | .018 | .035 | 5 |
| D | 5.97 | 6.22 | .235 | .245 | 6 |
| D1 | 5.21 | – | .205 | – | 4 |
| E | 6.35 | 6.73 | .250 | .265 | 6 |
| E1 | 4.32 | – | .170 | | 4 |
| e | 2.29 | | .090 BSC | | |
| H | 9.40 | 10.41 | .370 | .410 | |
| L | 1.40 | 1.78 | .055 | .070 | |
| L1 | 2.74 REF. | | .108 REF. | | |
| L2 | 0.051 BSC | | .020 BSC | | |
| L3 | 0.89 | 1.27 | .035 | .050 | |
| L4 | | 1.02 | | .040 | |
| L5 | 1.14 | 1.52 | .045 | .060 | 3 |
| ø | 0° | 10° | 0° | 10° | |
| ø1 | 0° | 15° | 0° | 15° | |

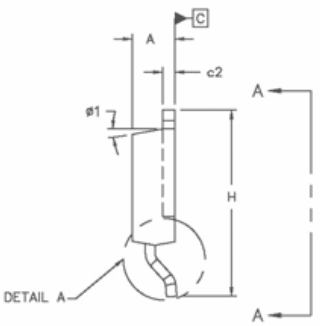


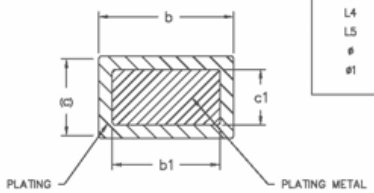


SECTION C–C

NOTES:

1.0 DIMENSIONING AND TOLERANCING PER ASME Y14.5 M– 1994.
2.0 DIMENSIONS ARE SHOWN IN INCHES [MILLIMETERS].
3.0 LEAD DIMENSION UNCONTROLLED IN L5
4.0 DIMENSION D1 AND E1 ESTABLISH A MINIMUM MOUNTING SURFACE FOR THERMAL PAD.
5.0 SECTION C–C DIMENSIONS APPLY TO THE FLAT SECTION OF THE LEAD BETWEEN .005 [0.127] AND .010 [0.2540 FROM THE LEAD TIP.
6.0 DIMENSION D & E DO NOT INCLUDE MOLD FLASH. MOLD FLASH SHALL NOT EXCEED .005" (0.127) PER SIDE. THESE DIMENSIONS ARE MEASURED AT THE OUTERMOST EXTREMES OF THE PLASTIC BODY.
7.0 OUTLINE CONFORMS TO JEDEC OUTLINE TO–252AA.
8.0 LEADS AND DRAIN ARE PLTED WITH 100% Sn

## Tape & Reel - D-Pak

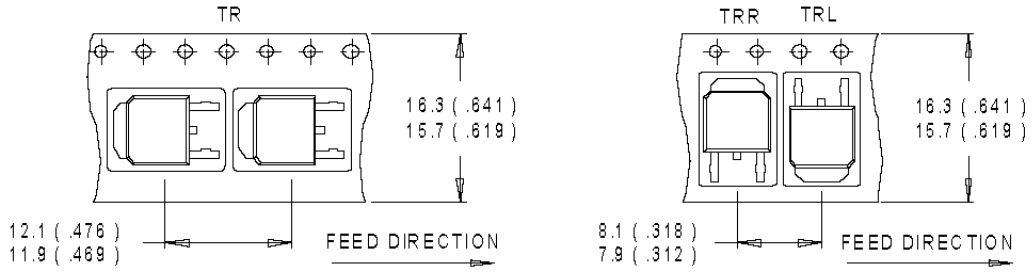


NOTES :
1. CONTROLLING DIMENSION : MILLIMETER.
2. ALL DIMENSIONS ARE SHOWN IN MILLIMETERS ( INCHES ).
3. OUTLINE CONFORMS TO EIA-481 & EIA-541.

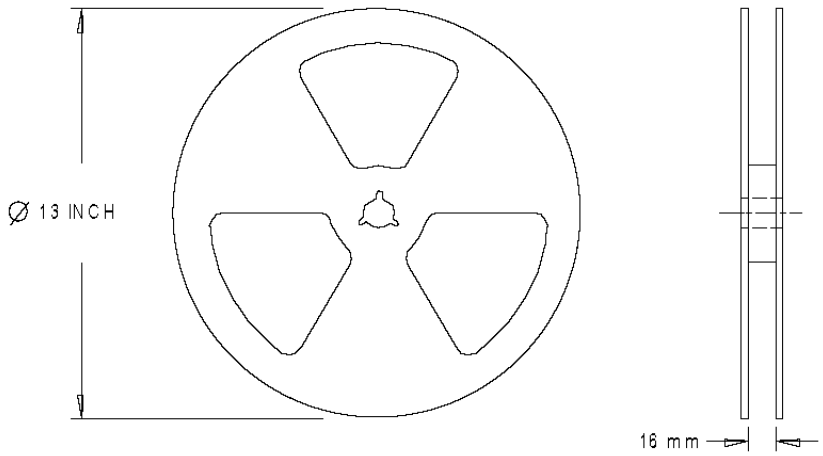


NOTES :
1. OUTLINE CONFORMS TO EIA-481.

Dimensions are shown in millimeters (inches)

Note: For the most current drawings please refer to the IR website at:
http://www.irf.com/package/