Excellent Integrated System Limited

Stocking Distributor

Click to view price, real time Inventory, Delivery & Lifecycle Information:

FCI
HM1L51LDP000H6PLF

For any questions, you can email us directly:
sales@integrated-circuit.com

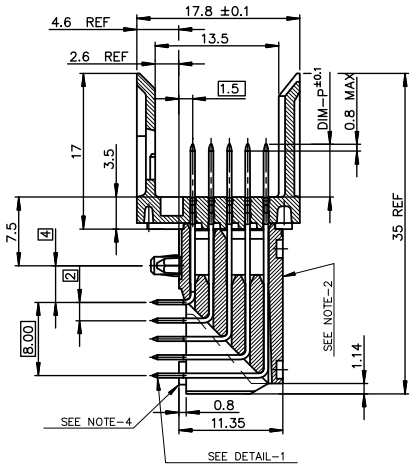

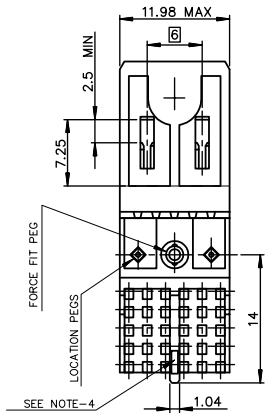

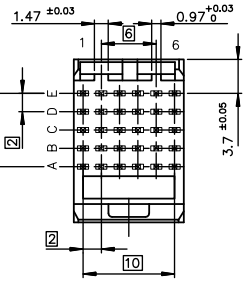

DETAIL OF FORCE-FIT PEGS

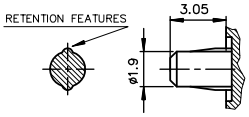

LAYOUT FOR P.C.B
(PER 12mm LENGTH)

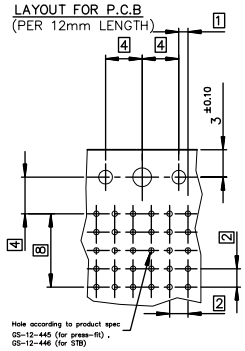

DETAIL-1: SOLDER PIN

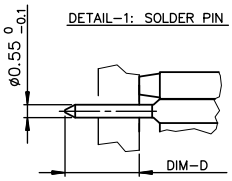

NOTE-2: INSERTION IN PCB, HANDLING OR BENCH PRESS
NOTE-3: IF SUFFIX "P" IS ADDED IN P/N PACKAGING IS IN TRAYS BUT CONNECTOR MARKING IS WITHOUT "P"
EXAMPLE: HM1XXXXXXXXXXH6P, MARKED HM1XXXXXXXXXXH6
NOTE-4: REAR CENTRAL SUPPORT FOR BETTER ASSY ON PCB

GENERAL CHARACTERISTICS AND ROHS INFORMATIONS:
SEE PRODUCT SPECIFICATION GS-12-446

European Views

rev	ecn no	dr	date
B	-	MAS	2000/08/31
C	LS05-001	MLE	2005/03/15
D	LS06-0095	LGO	2006/07/10
E	LS07-0184	MLE	2007/07/24
F	DG10-0231	Cenh	2010/06/18
-	-	-	-
-	-	-	-

Dr	CHAMPION	1997/06/17
Eng	LENOIR	1997/06/17
Chr	LEGARE	1997/06/17
Appr	LEGARE	1997/06/17

www.fciconnect.com

surface ISO 1302 | tolerance std ISO 406 ISO 1101
TOLERANCES UNLESS OTHERWISE SPECIFIED

ANGULAR	LINEAR		
0.XX° ±2°		0.X	±0.1
		0.XX	±0.1
		0.XXX	±0.1

Product family METRAL

projection | mm | size A3 | Scale 2.5 | ECN | Spec ref -

title METRAL RA HEADER 5 ROW
STANDARD SOLDER 30 WAY
catalog no -
dwg no C-8626-0239 Rev. F
CUSTOMER sheet 1 of 2

REV F - 2006-04-17

Copyright FCI.

PDM: Rev:F STATUS: Released Printed: May 19, 2011

Distributor of FCI: Excellent Integrated System Limited
Datasheet of HM1L51LDP000H6PLF - METRAL HDR RA PF 5X6
Contact us: sales@integrated-circuit.com Website: www.integrated-circuit.com

TIN LEAD PART NUMBER

Part Number: HM1L51xyP000Hz

MATING LENGTH DIM-P / REPLACE 'x' BY:

	ROW-A	ROW-B	ROW-C	ROW-D	ROW-E
A =	5.00	5.00	5.00	5.00	5.00
STD → L =	5.75	5.75	5.75	5.75	5.75
D =	6.50	6.50	6.50	6.50	6.50
B =	**6.50**	5.00	5.00	5.00	5.00
C =	6.50	5.75	5.75	6.50	5.75

TERMINATION LENGTH DIM-D	D=2.90 ±0.3,replace y by A
	D=3.70 ±0.3,replace y by B

LEAD FREE PART NUMBER

Part Number: HM1L51xyP000HzLF

MATING LENGTH DIM-P / REPLACE 'x' BY:

	ROW-A	ROW-B	ROW-C	ROW-D	ROW-E
A =	5.00	5.00	5.00	5.00	5.00
STD → L =	5.75	5.75	5.75	5.75	5.75
D =	6.50	6.50	6.50	6.50	6.50
B =	**6.50**	5.00	5.00	5.00	5.00
C =	6.50	5.75	5.75	6.50	5.75

TERMINATION LENGTH DIM-D	D=2.90 ±0.3,replace y by A
	D=3.70 ±0.3,replace y by B

PART NUMBER / CONTACT LOADING

Special Loading	MATING LENGTH DIM-P					PART NUMBER	
	ROW-A	ROW-B	ROW-C	ROW-D	ROW-E		DIM-D
	5.75	5.75	—	5.75	5.75	HM1L51LAP347H6PLF	2.90±0.3

"–" EMPTY POSITION

Copyright FCI.

European Views

www.fciconnect.com			surface ISO 1302	tolerance std ISO 406 ISO 1101	projection	mm
			TOLERANCES UNLESS OTHERWISE SPECIFIED			
Dr	CHAMPION	1997/06/17	ANGULAR	LINEAR 0.X ±0.1	size A3	Scale 2.5
Eng	LENOIR	1997/06/17		0.XX ±0.1		
Chr	LEGARE	1997/06/17	0.XX° ±2°	0.XXX ±0.1	ECN	
Appr	LEGARE	1997/06/17	Product family	METRAL	Spec ref –	
title	METRAL RA HEADER 5 ROW STANDARD SOLDER 30 WAY				dwg no C-8626-0239	Rev. F
	catalog no –				CUSTOMER	sheet 2 of 2

REV F – 2006-04-17