Excellent Integrated System Limited

Stocking Distributor

Click to view price, real time Inventory, Delivery & Lifecycle Information:

On-Shore Technology, Inc.
OSTTO020152

For any questions, you can email us directly:
sales@integrated-circuit.com

SIGN	DATE	DESCRIPTION	APPROVER

THIS IS CAD DRAWING, DO NOT REVISE MANUALLY!!!

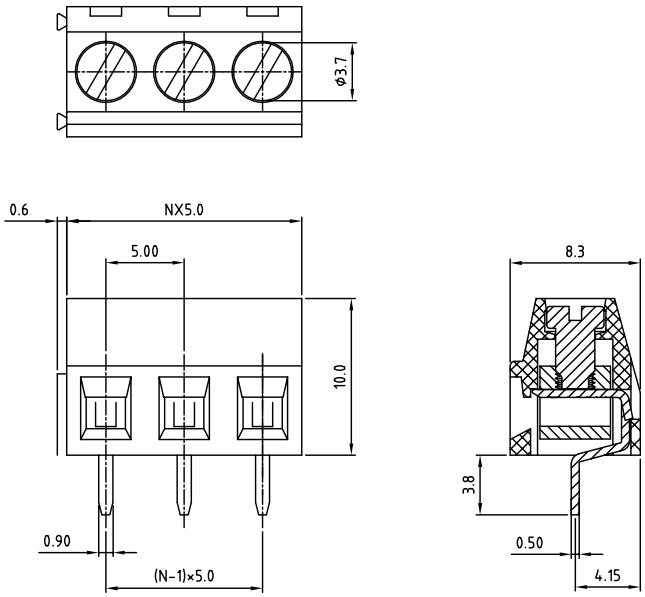

N=Number of contacts

P.C.B. LAYOUT

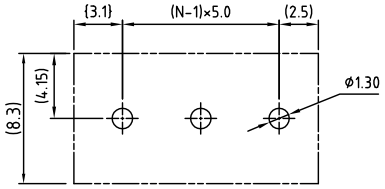

Material

- Terminal body
- (metal housing): Brass(CuZn)
- Terminal screw: Steel Zinc plating "-" slot type
- Contacts: Brass
- Surface of solder tail: Tin plated
- Insulator (housing): Thermoplastic (UL94V-0)

Electrical UL / VDE

- Voltage rating: 300VAC/250VAC
- Current rating: 10A/10A
- Wire range: 0.5-1.5mm²
  Solid wire(AWG): 16-26
  Stranded wire(AWG): 16-26
- Torque: 3.5Lb-In/0.4N.m
- Screw: M2.5
- Wire strip length: 5-6mm
- Withstanding Voltage: 1.6KV/2KV
- Operating temperature: -30°C to +105°C
- Soldering temperature: 250°C±10°C/5 Sec
- Safety Approval:

RoHS Compliant

OSTTOXX0152

No. of Poles
02: 2 Poles
03: 3 Poles
. .. ...
24: 24 Poles

COLOR:
0: Black
5: Green (Standard)
6: Blue
8: Grey

THESE DRAWINGS AND SPECIFICATIONS ARE THE PROPERTY OF ON-SHORE TECHNOLOGY, INC. AND SHALL NOT BE REPRODUCED, COPIED OR USED IN ANY MANNER WITHOUT THE PRIOR WRITTEN CONSENT OF ON-SHORE TECHNOLOGY, INC.

ON-SHORE TECHNOLOGY, INC.

TITLE	OSTTO 5.0mm Series				
PART NO.	OSTTOXX0152			DWG NO.	OSTTOXX0152.DWG
APPROVED	CHECKED	DESIGNED	DRAWN	CUST NO.	
Shi Jun 2006.10.20	Shi Jun 2006.10.20	xionghaitao 2006.10.20	xionghaitao 2006.10.20	UNIT: mm SCALE: NONE SHEET: 01/01 REV.: E	

Tolerance	
X.	±0.50
X.X	±0.30
X.XX	±0.10
X°	±1°