Excellent Integrated System Limited

Stocking Distributor

Click to view price, real time Inventory, Delivery & Lifecycle Information:

Texas Instruments
TL1464IPT

For any questions, you can email us directly:
sales@integrated-circuit.com

Distributor of Texas Instruments: Excellent Integrated System Limited
Datasheet of TL1464IPT - IC REG CTRLR INV PWM 48-LQFP
Contact us: sales@integrated-circuit.com Website: www.integrated-circuit.com

TL1464I
QUAD PULSE-WIDTH-MODULATION CONTROL CIRCUIT

SLVS266 – FEBRUARY 2000

- **High-Speed Drive Controller for PNP Power Transistor**
- **Internal-Regulator Provides a Stable 1.5 V Reference Supply**
- **Low Start-Up Voltage 3.1 V**
- **Internal Short-Circuit Protection**
- **Internal Undervoltage Lockout Protection**
- **Internal Shut-Down Circuit by Channel**
- **Controllable Base Current of External Transistor**

description

The TL1464I incorporates on a single monolithic chip all the functions required in the construction of a pulse-width-modulation control circuit. Designed primarily for power supply control, the TL1464I contains an on-chip 1.5 V regulator, four error amplifiers, an oscillator, two dead-time comparators, undervoltage lockout circuitry, short circuit protection, standby control circuitry, and output circuits.

The external speed-up capacitors provide exceptional rise and fall time performance for the PNP power transistor.

The TL1464I operates from 3.1 V supply voltage and 2 pair of four-outputs (CH-1/CH-3, CH-2/CH-4 the same period) at the inverse phase of each other. As a result, the TL1464I provides high-efficiency power supply.

FUNCTION TABLE

INPUTS		OUTPUT FUNCTIONS				
STANDBY	STANDBY-2 TO4	VREF	OUTPUT-1	OUTPUT-2	OUTPUT-3	OUTPUT-4
$V_I \le 0.4$ V	$V_I \le 0.4$ V, $V_I \ge 2.4$ V	L	OFF	OFF	OFF	OFF
$V_I \ge 2.4$ V	$V_I \ge 2.4$ V	H	ON	ON	ON	ON
	$V_I \ge 0.4$ V	H	ON	See Note	See Note	See Note

NOTE: When the STANDBY input is high (≥ 2.4 V), OUTPUT-2 to 4 are controlled individually. If STANDBY-2 input is low (≤ 0.4 V), OUTPUT-2 is turned off. When CH-2 standby mode is released, CH-2 can do the soft-start function.

Please be aware that an important notice concerning availability, standard warranty, and use in critical applications of Texas Instruments semiconductor products and disclaimers thereto appears at the end of this data sheet.

PRODUCTION DATA information is current as of publication date. Products conform to specifications per the terms of Texas Instruments standard warranty. Production processing does not necessarily include testing of all parameters.

Copyright © 2000, Texas Instruments Incorporated

TEXAS INSTRUMENTS
POST OFFICE BOX 655303 • DALLAS, TEXAS 75265

TL1464I
QUAD PULSE-WIDTH-MODULATION CONTROL CIRCUIT

SLVS266 – FEBRUARY 2000

PT PACKAGE
(TOP VIEW)

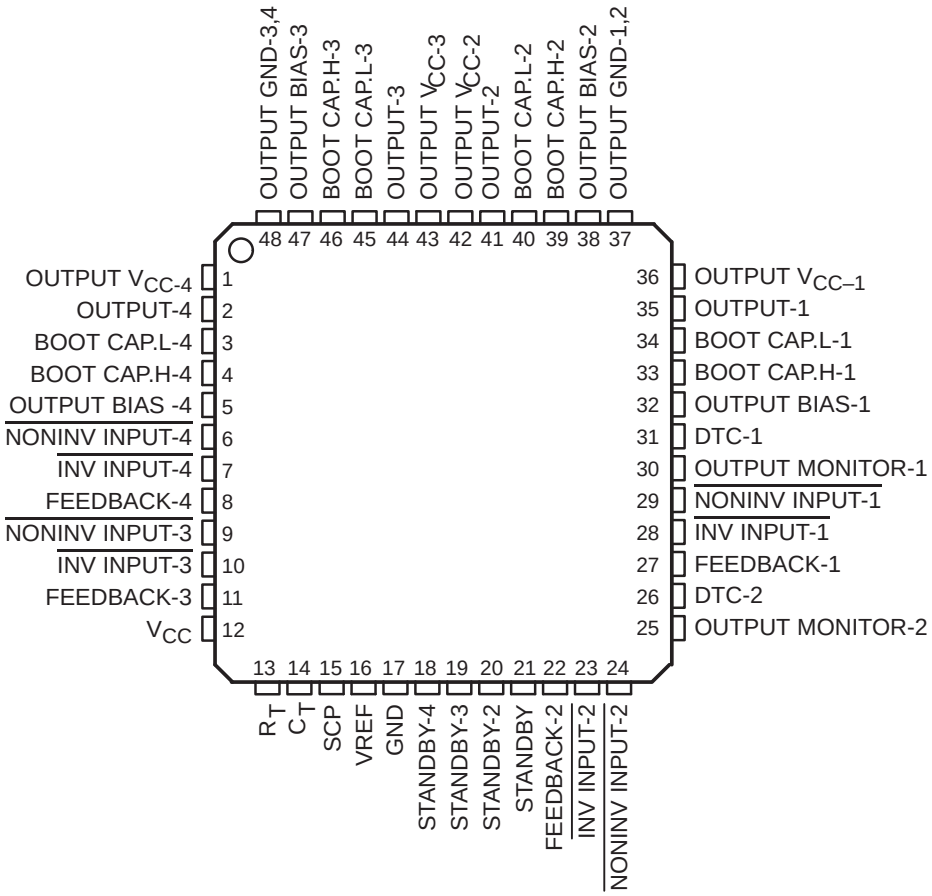

Distributor of Texas Instruments: Excellent Integrated System Limited
Datasheet of TL1464IPT - IC REG CTRLR INV PWM 48-LQFP
Contact us: sales@integrated-circuit.com Website: www.integrated-circuit.com

functional block diagram

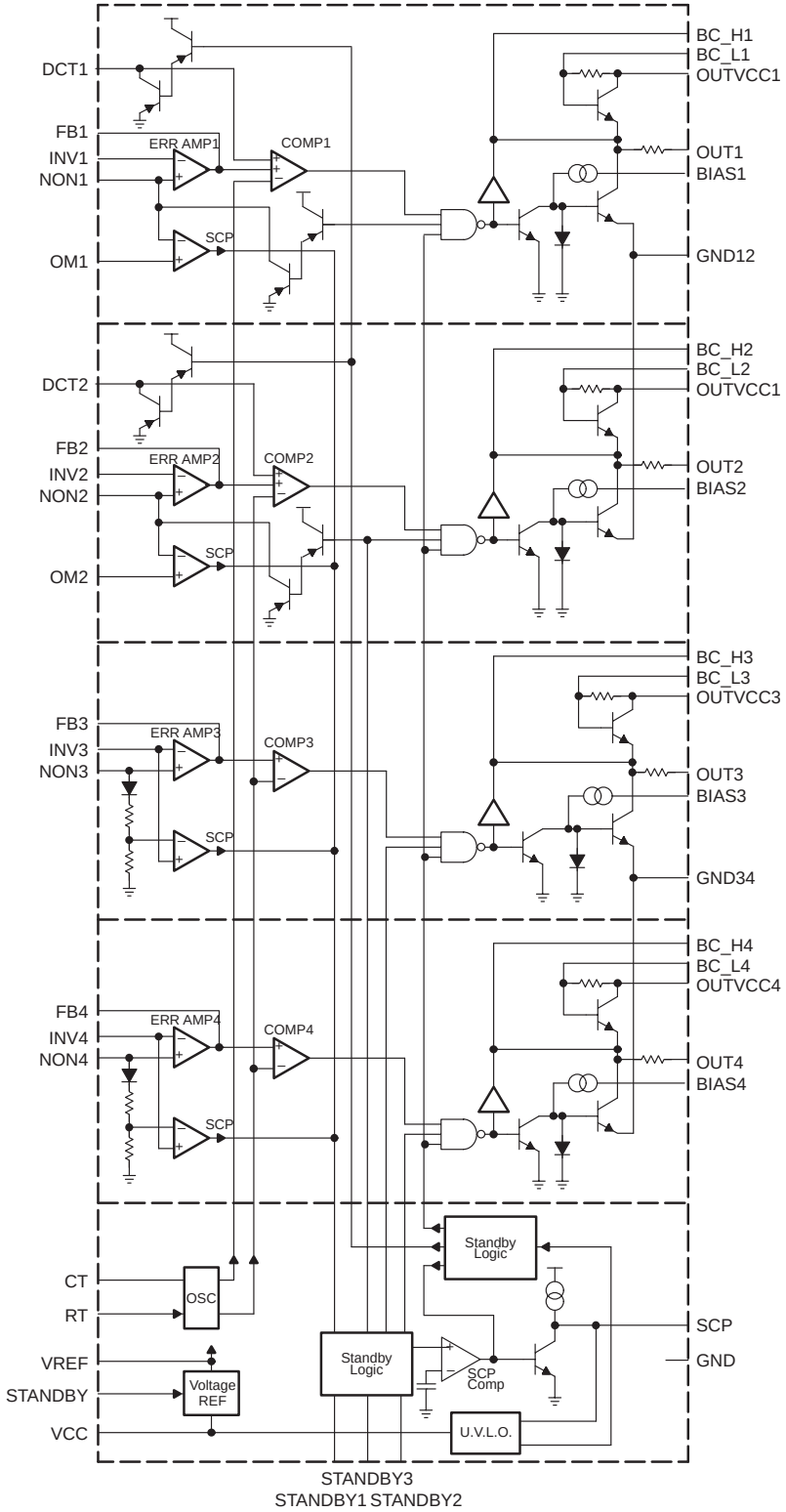

Distributor of Texas Instruments: Excellent Integrated System Limited
Datasheet of TL1464IPT - IC REG CTRLR INV PWM 48-LQFP
Contact us: sales@integrated-circuit.com Website: www.integrated-circuit.com

Terminal Functions

TERMINAL NAME	NO.	I/O	DESCRIPTION
BOOT CAP.H-1	33		Boot-strap capacitor connect pin (CH-1)
BOOT CAP.L-1	34		
BOOT CAP.H-2	39		Boot-strap capacitor connect pin (CH-2)
BOOT CAP.L-2	40		
BOOT CAP.H-3	46		Boot-strap capacitor connect pin (CH-3)
BOOT CAP.L-3	45		
BOOT CAP.H-4	4		Boot-strap capacitor connect pin (CH-4)
BOOT CAP.L-4	3		
C_T	14		Timing capacitor connect pin
DTC-1	31		Dead-time control input pin (CH-1)
DTC-2	26		Dead-time control input pin (CH-2)
FEEDBACK-1	27		Error amplifier output pin (CH-1)
FEEDBACK-2	22		Error amplifier output pin (CH-2)
FEEDBACK-3	11		Error amplifier output pin (CH-3)
FEEDBACK-4	8		Error amplifier output pin (CH-4)
GND	17		Ground pin
$\overline{\text{INV INPUT-1}}$	28		Error amplifier inverting input pin (CH-1)
$\overline{\text{INV INPUT-2}}$	23		Error amplifier inverting input pin (CH-2)
$\overline{\text{INV INPUT-3}}$	10		Error amplifier inverting input pin (CH-3)
$\overline{\text{INV INPUT-4}}$	7		Error amplifier inverting input pin (CH-4)
$\overline{\text{NONINV INPUT-1}}$	29		Error amplifier noninverting input pin (CH-1)
$\overline{\text{NONINV INPUT-2}}$	24		Error amplifier noninverting input pin (CH-2)
$\overline{\text{NONINV INPUT-3}}$	9		Error amplifier noninverting input pin (CH-3)
$\overline{\text{NONINV INPUT-4}}$	6		Error amplifier noninverting input pin (CH-4)
OUTPUT-1	35		Output pin (CH-1)
OUTPUT-2	41		Output pin (CH-2)
OUTPUT-3	44		Output pin (CH-3)
OUTPUT-4	2		Output pin (CH-4)
OUTPUT BIAS-1	32		Output ON current setup pin (CH-1)
OUTPUT BIAS-2	38		Output ON current setup pin (CH-2)
OUTPUT BIAS-3	47		Output ON current setup pin (CH-3)
OUTPUT BIAS-4	5		Output ON current setup pin (CH-4)
OUTPUT GND-1,2	37		Output ground pin (CH-1,2)
OUTPUT GND-3,4	48		Output ground pin (CH-3,4)
OUTPUT MONITOR-1	30		Output monitor comparator input pin (CH-1)
OUTPUT MONITOR-2	25		Output monitor comparator input pin (CH-2)
OUTPUT V_{CC-1}	36		Output supply pin (CH-1)
OUTPUT V_{CC-2}	42		Output supply pin (CH-2)
OUTPUT V_{CC-3}	43		Output supply pin (CH-3)
OUTPUT V_{CC-4}	1		Output supply pin (CH-4)
R_T	13		Timing resistor connect pin
SCP	15		Short-circuit protection capacitor connect pin

Distributor of Texas Instruments: Excellent Integrated System Limited
Datasheet of TL1464IPT - IC REG CTRLR INV PWM 48-LQFP
Contact us: sales@integrated-circuit.com Website: www.integrated-circuit.com

Terminal Functions (Continued)

TERMINAL NAME	NO.	I/O	DESCRIPTION
STANDBY	21		Output-1 to 4 control pin. Input L level voltage (0.4 V max). All outputs function and VREF are shutdown.
STANDBY-2	20		Output-2 control pin. Input L level voltage (0.4 V max), output-2 function is shutdown.
STANDBY-3	19		Output-3 control pin. Input L level voltage (0.4 V max), output-3 function is shutdown.
STANDBY-4	18		Output-4 control pin. Input L level voltage (0.4 V max), output-4 function is shutdown.
V_{CC}	12		Power supply pin

absolute maximum ratings over operating free-air temperature (unless otherwise noted)†

Supply voltage range, V_{CC} (see Note 1) . . . . . 13 V
Amplifier input voltage, V_{IC} . . . . . 13 V
Output voltage, V_O . . . . . 13 V
Peak output current (sink), $I_{(SINK)}$ . . . . . 100 mA
Peak output current (source), I_{SOURCE} . . . . . 1 A
Continuous total dissipation at (or below) 25°C free-air temperature (unit), P_D . . . . . 695 mW
Continuous total dissipation at (or below) 25°C free-air temperature (using board), P_D
(see Note 2) . . . . . 1315 mW
Operating free-air temperature range, T_A . . . . . –20°C to 75°C
Storage temperature range, T_{stg} . . . . . –65°C to 150°C
Lead temperature 1,6 mm (1/16 inch) from case for 10 seconds . . . . . 260°C

† Stresses beyond those listed under "absolute maximum ratings" may cause permanent damage to the device. These are stress ratings only, and functional operation of the device at these or any other conditions beyond those indicated under "recommended operating conditions" is not implied. Exposure to absolute-maximum-rated conditions for extended periods may affect device reliability.

NOTES: 1. All voltage4 value are with respect to network ground terminal.
2. Using t1.6 × 50 × 50 mm glass epoxy resin.

recommended operating conditions

		MIN	NOM	MAX	UNIT
Supply voltage, V_{CC}		3.1		12	V
Amplifier input voltage, V_{IC}	CH-1,2	–0.1		V_{CC}–1.8	V
	CH-3,4	0		V_{CC}–1.8	
Standby input voltage, V_I (pins 18, 19. 20. 21)	H level	2.4		V_{CC}	V
	L level			0.4	
Output voltage, V_O				12	V
Current into feedback terminal, $I_{(CAMP)}$				–45	µA
Feedback resistor, $R_{(NF)}$		100			kΩ
Boot-strap capacitor, $C_{(BOOT)}$		100	500		pF
Bias resistor, $R_{(BIAS)}$		1.2		20	
Bias capacitor, $C_{(BIAS)}$			30	200	pF
Timing resistor, $R_{(T)}$		7		50	kΩ
Timing capacitor, $C_{(T)}$		68		1000	pF
Oscillation frequency, $f_{(OSC)}$		0.05		2	MHz
Operating free-air temperature, T_A		–20		75	°C

Distributor of Texas Instruments: Excellent Integrated System Limited
Datasheet of TL1464IPT - IC REG CTRLR INV PWM 48-LQFP
Contact us: sales@integrated-circuit.com Website: www.integrated-circuit.com

electrical characteristics over recommended operating free-air temperature range, V_{CC} = 6 V, f = 1 MHz (unless otherwise noted)

reference section

PARAMETER		TEST CONDITIONS	MIN	TYP	MAX	UNIT
V_{ref}	Output voltage (pin 16)	T_A = 25°C, $I_{(OR)}$ = –1 mA	1.485	1.50	1.515	V
$R_{(EGIN)}$	Input regulation	V_{OS} = 3.1 V to 12 V, $I_{(OR)}$ = –1 mA		2	12.5	mV
$R_{(EFL)}$	Output regulation	$I_{(OR)}$ = –0.1 mA to –1 mA		1	7.5	mV
$V_{(RTC1)}$	Output voltage change with temperature	T_A = 20°C to 25°C		–0.2%	±2%	
$R_{(RTC2)}$		T_A = 25°C to 75°C		–0.2%	±2%	
I_{OS}	Short-circuit output current	V_{ref} = 0 V	4	8		mA

undervoltage lockout section

PARAMETER		TEST CONDITIONS	MIN	TYP	MAX	UNIT
V_{IH}	Upper threshold voltage	T_A = 25°C		2.7		V
V_{IL}	Lower threshold voltage			2.5		V
V_{hys}	Hysteresis		0.1	0.2		V
V_R	Reset threshold voltage (V_{CC})		2.2	2.3		V

output voltage monitor section

PARAMETER		TEST CONDITIONS	MIN	TYP	MAX	UNIT
$V_{IO(M)}$	Input offset voltage	T_A = 25°C (CH-1,2)		0		V
		V_I = 1.5 V (pins 6 and 9), T_A = 25°C (CH-3,4)		10.5		
$I_{(BOM)}$	Input bias current	V_I = 0 V		–200	–500	nA
$V_{(IOM)}$	Input voltage range	V_{CC} = 3.1 V ~ 12 V	0 to V_{CC}–1.8			V

protection control section

PARAMETER		TEST CONDITIONS	MIN	TYP	MAX	UNIT
$V_{(tPC)}$	Input threshold voltage (pin 15)	T_A = 25°C	1.45	1.50	1.55	V
$V_{(stby)}$	Standby voltage (pin 15)		40	70	100	mV
V_I	Latched input voltage (pin 15)			10	30	mV
$I_{(bPC)}$	Input source current (pin 15)	T_A = 25°C	–1	–3	–6	µA

oscillator section

PARAMETER		TEST CONDITIONS	MIN	TYP	MAX	UNIT
$f_{(OSC)}$	Frequency	C_t = 100 pF, R_t = 10 kΩ		1		MHz
$f_{(dev)}$	Standard deviation of frequency	All values are constant		7%		
$f_{(dV)}$	Frequency change with voltage	V_{CC} = 3 V ~ 12 V		1%		
$f_{(dT1)}$	Frequency change with temperature	T_A = 20°C to 25°C		–0.5%	±4%	
$f_{(dT2)}$		T_A = 25°C to 75°C		0.5%	±4%	

Distributor of Texas Instruments: Excellent Integrated System Limited
Datasheet of TL1464IPT - IC REG CTRLR INV PWM 48-LQFP
Contact us: sales@integrated-circuit.com Website: www.integrated-circuit.com

electrical characteristics over recommended operating free-air temperature range, V_{CC} = 6 V, f = 1 MHz (unless otherwise noted) (continued)

dead-time control section

PARAMETER		TEST CONDITIONS	MIN	TYP	MAX	UNIT
$I_{(Idt)}$	Input current			–1	–4	µA
$I_{(dt)}$	Latched mode sink current	T_A = 25°C	0.3	1	2	mA
$V_{(dt)}$	Latched input voltage	$I_{(dt)}$ = 100 µA			0.5	V
V_{IO}	Input threshold voltage	Zero duty cycle	0.6	0.7	0.8	V
$V_{(tt00)}$		100% duty cycle	1.3	1.4	1.5	

error-amplifier section

PARAMETER			TEST CONDITIONS	MIN	TYP	MAX	UNIT
V_{IO}	Input offset voltage		V_O = 1 V			±10	mV
I_{IO}	Input offset current		V_O = 1 V			±100	nA
I_{IB}	Input bias current		V_O = 1 V		–200	–500	nA
V_{ICR}	Common-mode input voltage	CH-1,2	V_{CC} = 3.1 V ~ 12 V	–0.1 to V_{CC}–1.8			V
		CH-3,4		0 to V_{CC}–1.8			
$A_{(v)}$	Open-loop voltage amplification		R_I = 200 kΩ	60	75		dB
B1	Unity-gain bandwidth				6		MHz
CMRR	Common-mode rejection ratio		V_{IC} = –0.1 V ~ V_{CC} – 1.8 V	60	80		dB
V_{OM+}	Maximum output voltage swing			V_{ref}–0.1			V
V_{OM-}						0.2	
$I_{O(vr+)}$	Output current (sink)		V_{ID} = –0.1 V, V_O = 1.25 V	0.5	1		mA
I_{I+}	Sink current (pin 24) (standby mode)		V_I = 0.3 V (pin 24) V_I = 0 V (pin 20)	0.1	0.5		mA
I_{OM-}	Output current (source)		V_{ID} = 0.1 V, V_O = 0.75 V	–45	–85		µA

output section

PARAMETER		TEST CONDITIONS	MIN	TYP	MAX	UNIT
$I_{(SINK)}$	Output current (sink)	$R_{(BIAS)}$ = 2.4 kΩ	15	20	25	mA
		$R_{(BIAS)}$ = 5.8 kΩ	7.5	10	12.5	

total device

PARAMETER		TEST CONDITIONS	MIN	TYP	MAX	UNIT
$I_{O(CS)}$	Standby supply current	Standby pin input voltage = 0 V		1	200	µA
$I_{O(CA)}$	Average supply current	R_t = 10 kΩ		4	7	mA

Distributor of Texas Instruments: Excellent Integrated System Limited
Datasheet of TL1464IPT - IC REG CTRLR INV PWM 48-LQFP
Contact us: sales@integrated-circuit.com Website: www.integrated-circuit.com

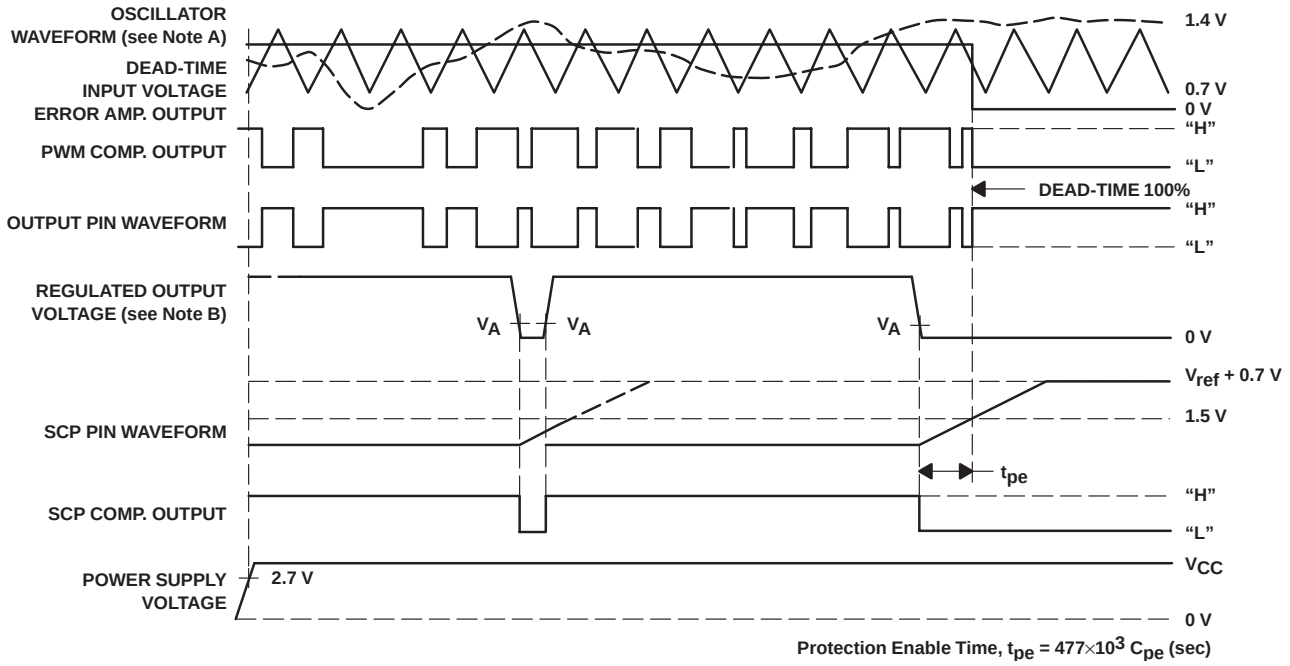

Figure 1. Timing Diagram (CH-1/CH-2)

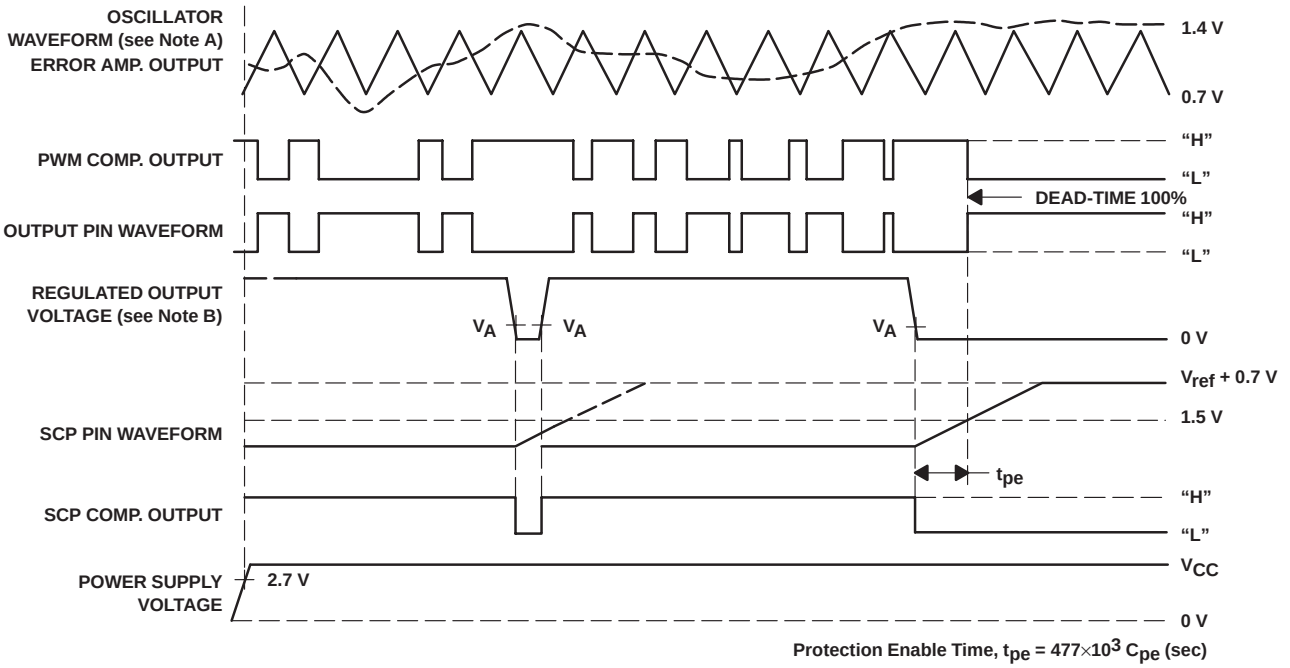

Figure 2. Timing Diagram (CH-3/CH-4)

NOTES: A. Oscillator waveform of CH-1 and CH-2 is inverting output each other.
B. Va = input voltage of pin 29 (pin 24)

Distributor of Texas Instruments: Excellent Integrated System Limited
Datasheet of TL1464IPT - IC REG CTRLR INV PWM 48-LQFP
Contact us: sales@integrated-circuit.com Website: www.integrated-circuit.com

MECHANICAL DATA

PT (S-PQFP-G48) **PLASTIC QUAD FLATPACK**

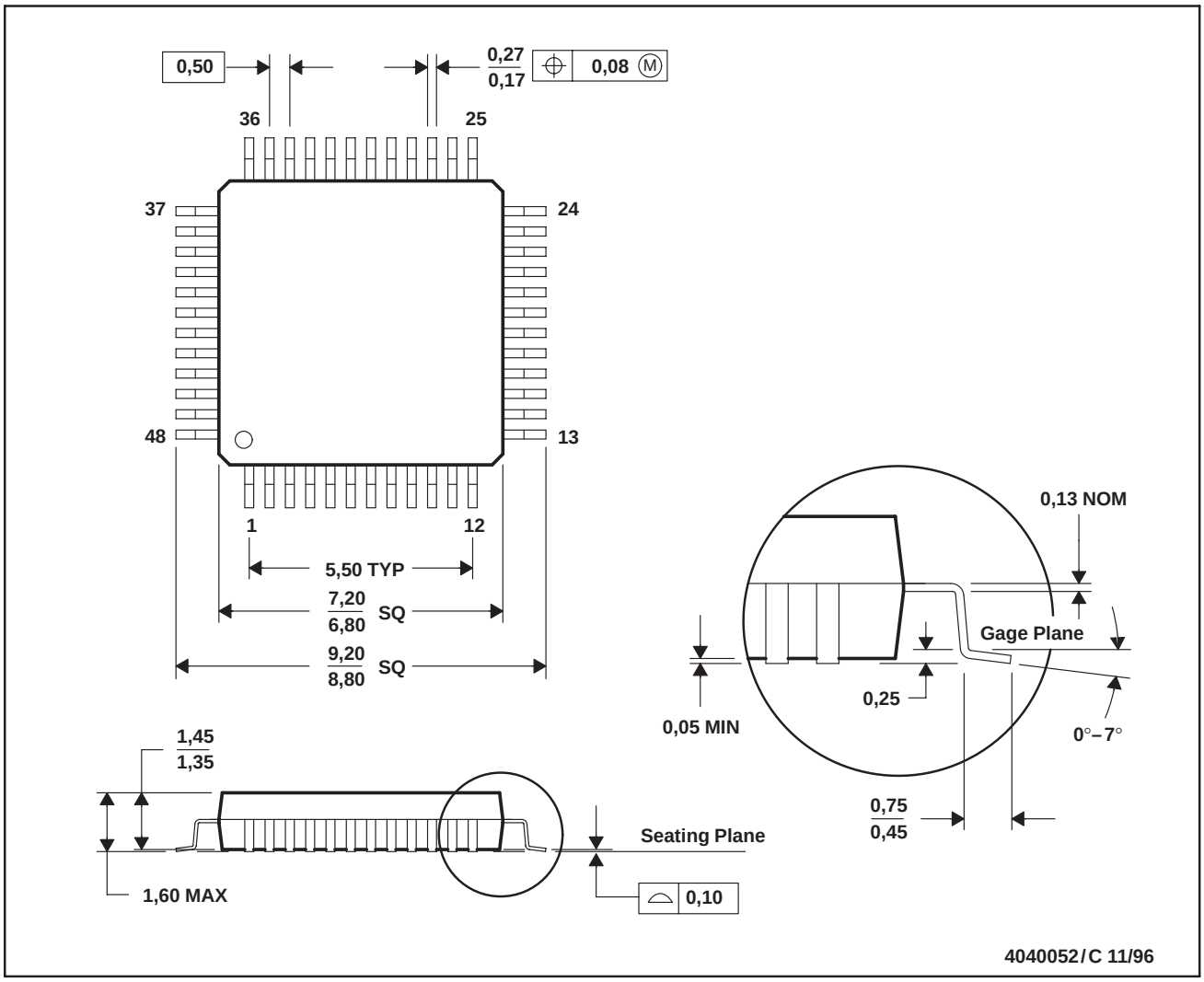

NOTES: A. All linear dimensions are in millimeters.
B. This drawing is subject to change without notice.
C. Falls within JEDEC MS-026
D. This may also be a thermally enhanced plastic package with leads conected to the die pads.

Distributor of Texas Instruments: Excellent Integrated System Limited
Datasheet of TL1464IPT - IC REG CTRLR INV PWM 48-LQFP
Contact us: sales@integrated-circuit.com Website: www.integrated-circuit.com

PACKAGING INFORMATION

Orderable Device	Status [1]	Package Type	Package Drawing	Pins	Package Qty	Eco Plan [2]	Lead/Ball Finish	MSL Peak Temp [3]
TL1464IPT	ACTIVE	LQFP	PT	48	250	Green (RoHS & no Sb/Br)	CU NIPDAU	Level-1-260C-UNLIM
TL1464IPTG4	ACTIVE	LQFP	PT	48	250	Green (RoHS & no Sb/Br)	CU NIPDAU	Level-1-260C-UNLIM
TL1464IPTR	ACTIVE	LQFP	PT	48	1000	Green (RoHS & no Sb/Br)	CU NIPDAU	Level-1-260C-UNLIM
TL1464IPTRG4	ACTIVE	LQFP	PT	48	1000	Green (RoHS & no Sb/Br)	CU NIPDAU	Level-1-260C-UNLIM

[1] The marketing status values are defined as follows:
ACTIVE: Product device recommended for new designs.
LIFEBUY: TI has announced that the device will be discontinued, and a lifetime-buy period is in effect.
NRND: Not recommended for new designs. Device is in production to support existing customers, but TI does not recommend using this part in a new design.
PREVIEW: Device has been announced but is not in production. Samples may or may not be available.
OBSOLETE: TI has discontinued the production of the device.

[2] Eco Plan - The planned eco-friendly classification: Pb-Free (RoHS), Pb-Free (RoHS Exempt), or Green (RoHS & no Sb/Br) - please check http://www.ti.com/productcontent for the latest availability information and additional product content details.
TBD: The Pb-Free/Green conversion plan has not been defined.
Pb-Free (RoHS): TI's terms "Lead-Free" or "Pb-Free" mean semiconductor products that are compatible with the current RoHS requirements for all 6 substances, including the requirement that lead not exceed 0.1% by weight in homogeneous materials. Where designed to be soldered at high temperatures, TI Pb-Free products are suitable for use in specified lead-free processes.
Pb-Free (RoHS Exempt): This component has a RoHS exemption for either 1) lead-based flip-chip solder bumps used between the die and package, or 2) lead-based die adhesive used between the die and leadframe. The component is otherwise considered Pb-Free (RoHS compatible) as defined above.
Green (RoHS & no Sb/Br): TI defines "Green" to mean Pb-Free (RoHS compatible), and free of Bromine (Br) and Antimony (Sb) based flame retardants (Br or Sb do not exceed 0.1% by weight in homogeneous material)

[3] MSL, Peak Temp. -- The Moisture Sensitivity Level rating according to the JEDEC industry standard classifications, and peak solder temperature.

Important Information and Disclaimer: The information provided on this page represents TI's knowledge and belief as of the date that it is provided. TI bases its knowledge and belief on information provided by third parties, and makes no representation or warranty as to the accuracy of such information. Efforts are underway to better integrate information from third parties. TI has taken and continues to take reasonable steps to provide representative and accurate information but may not have conducted destructive testing or chemical analysis on incoming materials and chemicals. TI and TI suppliers consider certain information to be proprietary, and thus CAS numbers and other limited information may not be available for release.

In no event shall TI's liability arising out of such information exceed the total purchase price of the TI part(s) at issue in this document sold by TI to Customer on an annual basis.

Distributor of Texas Instruments: Excellent Integrated System Limited
Datasheet of TL1464IPT - IC REG CTRLR INV PWM 48-LQFP
Contact us: sales@integrated-circuit.com Website: www.integrated-circuit.com

TAPE AND REEL INFORMATION

REEL DIMENSIONS

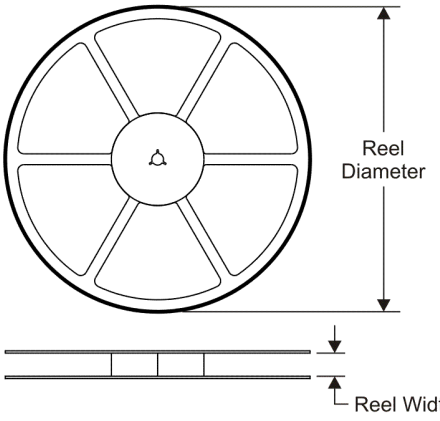

TAPE DIMENSIONS

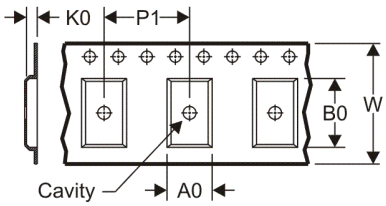

A0	Dimension designed to accommodate the component width
B0	Dimension designed to accommodate the component length
K0	Dimension designed to accommodate the component thickness
W	Overall width of the carrier tape
P1	Pitch between successive cavity centers

QUADRANT ASSIGNMENTS FOR PIN 1 ORIENTATION IN TAPE

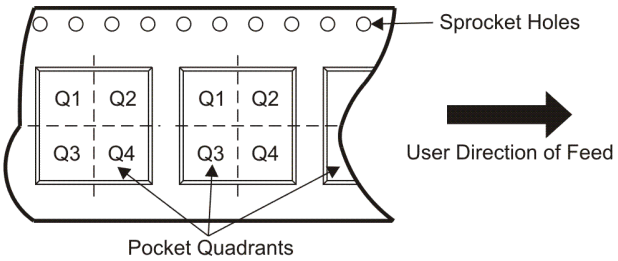

*All dimensions are nominal

Device	Package Type	Package Drawing	Pins	SPQ	Reel Diameter (mm)	Reel Width W1 (mm)	A0 (mm)	B0 (mm)	K0 (mm)	P1 (mm)	W (mm)	Pin1 Quadrant
TL1464IPTR	LQFP	PT	48	1000	330.0	16.4	9.6	9.6	1.9	12.0	16.0	Q2

PACKAGE MATERIALS INFORMATION

www.ti.com

11-Mar-2008

TAPE AND REEL BOX DIMENSIONS

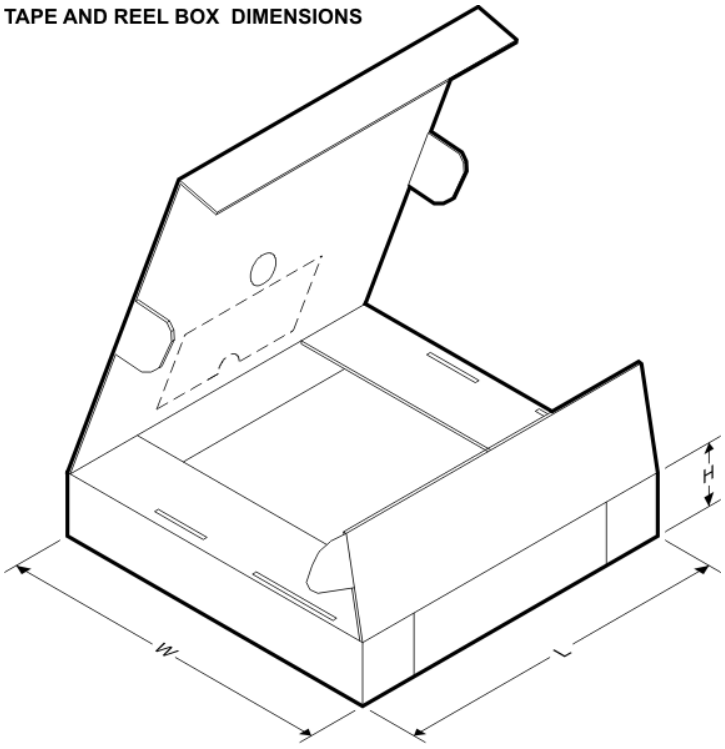

*All dimensions are nominal

Device	Package Type	Package Drawing	Pins	SPQ	Length (mm)	Width (mm)	Height (mm)
TL1464IPTR	LQFP	PT	48	1000	346.0	346.0	33.0

IMPORTANT NOTICE

Texas Instruments Incorporated and its subsidiaries (TI) reserve the right to make corrections, modifications, enhancements, improvements, and other changes to its products and services at any time and to discontinue any product or service without notice. Customers should obtain the latest relevant information before placing orders and should verify that such information is current and complete. All products are sold subject to TI's terms and conditions of sale supplied at the time of order acknowledgment.

TI warrants performance of its hardware products to the specifications applicable at the time of sale in accordance with TI's standard warranty. Testing and other quality control techniques are used to the extent TI deems necessary to support this warranty. Except where mandated by government requirements, testing of all parameters of each product is not necessarily performed.

TI assumes no liability for applications assistance or customer product design. Customers are responsible for their products and applications using TI components. To minimize the risks associated with customer products and applications, customers should provide adequate design and operating safeguards.

TI does not warrant or represent that any license, either express or implied, is granted under any TI patent right, copyright, mask work right, or other TI intellectual property right relating to any combination, machine, or process in which TI products or services are used. Information published by TI regarding third-party products or services does not constitute a license from TI to use such products or services or a warranty or endorsement thereof. Use of such information may require a license from a third party under the patents or other intellectual property of the third party, or a license from TI under the patents or other intellectual property of TI.

Reproduction of TI information in TI data books or data sheets is permissible only if reproduction is without alteration and is accompanied by all associated warranties, conditions, limitations, and notices. Reproduction of this information with alteration is an unfair and deceptive business practice. TI is not responsible or liable for such altered documentation. Information of third parties may be subject to additional restrictions.

Resale of TI products or services with statements different from or beyond the parameters stated by TI for that product or service voids all express and any implied warranties for the associated TI product or service and is an unfair and deceptive business practice. TI is not responsible or liable for any such statements.

TI products are not authorized for use in safety-critical applications (such as life support) where a failure of the TI product would reasonably be expected to cause severe personal injury or death, unless officers of the parties have executed an agreement specifically governing such use. Buyers represent that they have all necessary expertise in the safety and regulatory ramifications of their applications, and acknowledge and agree that they are solely responsible for all legal, regulatory and safety-related requirements concerning their products and any use of TI products in such safety-critical applications, notwithstanding any applications-related information or support that may be provided by TI. Further, Buyers must fully indemnify TI and its representatives against any damages arising out of the use of TI products in such safety-critical applications.

TI products are neither designed nor intended for use in military/aerospace applications or environments unless the TI products are specifically designated by TI as military-grade or "enhanced plastic." Only products designated by TI as military-grade meet military specifications. Buyers acknowledge and agree that any such use of TI products which TI has not designated as military-grade is solely at the Buyer's risk, and that they are solely responsible for compliance with all legal and regulatory requirements in connection with such use.

TI products are neither designed nor intended for use in automotive applications or environments unless the specific TI products are designated by TI as compliant with ISO/TS 16949 requirements. Buyers acknowledge and agree that, if they use any non-designated products in automotive applications, TI will not be responsible for any failure to meet such requirements.

Following are URLs where you can obtain information on other Texas Instruments products and application solutions:

Products		**Applications**	
Amplifiers	amplifier.ti.com	Audio	www.ti.com/audio
Data Converters	dataconverter.ti.com	Automotive	www.ti.com/automotive
DSP	dsp.ti.com	Broadband	www.ti.com/broadband
Clocks and Timers	www.ti.com/clocks	Digital Control	www.ti.com/digitalcontrol
Interface	interface.ti.com	Medical	www.ti.com/medical
Logic	logic.ti.com	Military	www.ti.com/military
Power Mgmt	power.ti.com	Optical Networking	www.ti.com/opticalnetwork
Microcontrollers	microcontroller.ti.com	Security	www.ti.com/security
RFID	www.ti-rfid.com	Telephony	www.ti.com/telephony
RF/IF and ZigBee® Solutions	www.ti.com/lprf	Video & Imaging	www.ti.com/video
		Wireless	www.ti.com/wireless

Mailing Address: Texas Instruments, Post Office Box 655303, Dallas, Texas 75265
Copyright © 2008, Texas Instruments Incorporated