Excellent Integrated System Limited

Stocking Distributor

Click to view price, real time Inventory, Delivery & Lifecycle Information:

Maxim Integrated
MAX5893EGK+D

For any questions, you can email us directly:
sales@integrated-circuit.com

Distributor of Maxim Integrated: Excellent Integrated System Limited
Datasheet of MAX5893EGK+D - IC DAC 12BIT DUAL 500MSPS 68-QFN
Contact us: sales@integrated-circuit.com Website: www.integrated-circuit.com

19-3546; Rev 2; 10/08

EVALUATION KIT AVAILABLE

12-Bit, 500Msps Interpolating and Modulating Dual DAC with CMOS Inputs

MAX5893

General Description

The MAX5893 programmable interpolating, modulating, 500Msps, dual digital-to-analog converter (DAC) offers superior dynamic performance and is optimized for high-performance wideband, single-carrier transmit applications. The device integrates a selectable 2x/4x/8x interpolating filter, a digital quadrature modulator, and dual 12-bit high-speed DACs on a single integrated circuit. At 30MHz output frequency and 500Msps update rate, the in-band SFDR is 84dBc while consuming 1.1W. The device also delivers 72dB ACLR for single-carrier WCDMA at a 61.44MHz output frequency.

The selectable interpolating filters allow lower input data rates while taking advantage of the high DAC update rates. These linear-phase interpolation filters ease reconstruction filter requirements and enhance the passband dynamic performance. Individual offset and gain programmability allow the user to calibrate out local oscillator (LO) feedthrough and sideband suppression errors generated by analog quadrature modulators.

The MAX5893 features a $f_{IM}/4$ digital image-reject modulator. This modulator generates a quadrature-modulated IF signal that can be presented to an analog I/Q modulator to complete the upconversion process. A second digital modulation mode allows the signal to be frequency-translated with image pairs at $f_{IM}/2$ or $f_{IM}/4$.

The MAX5893 features a standard 1.8V CMOS, 3.3V tolerant data input bus for easy interface. A 3.3V SPI™ port is provided for mode configuration. The programmable modes include the selection of 2x/4x/8x interpolating filters, $f_{IM}/2$, $f_{IM}/4$ or no digital quadrature modulation with image rejection, channel gain and offset adjustment, and offset binary or two's complement data interface.

Pin-compatible 14- and 16-bit devices are also available. Refer to the MAX5894 data sheet for the 14-bit version and the MAX5895 data sheet for the 16-bit version.

Applications

Base Stations: 3G UMTS, CDMA, and GSM

Broadband Wireless Transmitters

Broadband Cable Infrastructure

Instrumentation and Automatic Test Equipment (ATE)

Analog Quadrature Modulation Architectures

Pin Configuration appears at end of data sheet.

SPI is a trademark of Motorola, Inc.

cdma2000 is a registered trademark of Telecommunications Industry Association.

Features

- **72dB ACLR at f_{OUT} = 61.44MHz (Single-Carrier WCDMA)**
- **Meets 3G UMTS, cdma2000®, GSM Spectral Masks (f_{OUT} = 122MHz)**
- **Noise Spectral Density = -151dBFS/Hz at f_{OUT} = 16MHz**
- **90dBc SFDR at Low-IF Frequency (10MHz)**
- **86dBc SFDR at High-IF Frequency (50MHz)**
- **Low Power: 511mW (f_{CLK} = 100MHz)**
- **User Programmable**
  Selectable 2x, 4x, or 8x Interpolating Filters
  < 0.01dB Passband Ripple
  > 99dB Stopband Rejection
  Selectable Real or Complex Modulator Operation
  Selectable Modulator LO Frequency: OFF, $f_{IM}/2$, or $f_{IM}/4$
  Selectable Output Filter: Lowpass or Highpass
  Channel Gain and Offset Adjustment
- **EV Kit Available (Order the MAX5893EVKIT)**

Ordering Information

PART	TEMP RANGE	PIN-PACKAGE
MAX5893EGK-D	-40°C to +85°C	68 QFN-EP*
MAX5893EGK+D	-40°C to +85°C	68 QFN-EP*

D = Dry pack.
**EP = Exposed pad.*
+Denotes a lead-free/RoHS-compliant package.

Selector Guide

PART	RESOLUTION (BITS)	DAC UPDATE RATE (Msps)	INPUT LOGIC
MAX5893	12	500	CMOS
MAX5894	14	500	CMOS
MAX5895	16	500	CMOS
MAX5898	16	500	LVDS

Simplified Diagram

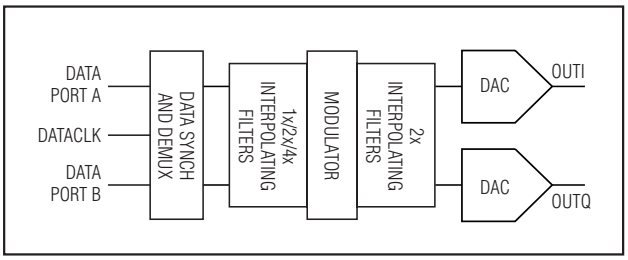

For pricing, delivery, and ordering information, please contact Maxim Direct at 1-888-629-4642, or visit Maxim's website at www.maxim-ic.com.

Distributor of Maxim Integrated: Excellent Integrated System Limited
Datasheet of MAX5893EGK+D - IC DAC 12BIT DUAL 500MSPS 68-QFN
Contact us: sales@integrated-circuit.com Website: www.integrated-circuit.com

12-Bit, 500Msps Interpolating and Modulating Dual DAC with CMOS Inputs

ABSOLUTE MAXIMUM RATINGS

$DV_{DD1.8}$, $AV_{DD1.8}$ to GND, DACREF .....-0.3V to +2.16V
$AV_{DD3.3}$, AV_{CLK}, $DV_{DD3.3}$ to GND, DACREF.....-0.3V to +3.9V
DATACLK, A0–A11, B0–B9,
SELIQ/B11, DATACLK/B10, $\overline{CS}$, $\overline{RESET}$, SCLK,
SDI and SDO to GND, DACREF.....-0.3V to ($DV_{DD3.3}$ + 0.3V)
CLKP, CLKN to GND, DACREF.....-0.3V to (AV_{CLK} + 0.3V)
REFIO, FSADJ to GND, DACREF .....-0.3V to ($AV_{DD3.3}$ + 0.3V)
OUTIP, OUTIN, OUTQP,
OUTQN to GND, DACREF.....-1V to ($AV_{DD3.3}$ + 0.3V)
SDO, DATACLK, DATACLK/BIO Continuous Current 8mA
Continuous Power Dissipation (T_A = +70°C)
68-Pin QFN (derate 41.7mW/°C above +70°C)
(Note 1) 3333.3mW
Junction Temperature.....+150°C
Operating Temperature Range .....-40°C to +85°C
Storage Temperature Range .....-65°C to +150°C
Lead Temperature (soldering, 10s) .....+300°C
Thermal Resistance θ_{JC} (Note 1).....0.8°C/W

Note 1: Thermal resistance based on a multilayer board with 4 x 4 via array in exposed pad area.

Stresses beyond those listed under "Absolute Maximum Ratings" may cause permanent damage to the device. These are stress ratings only, and functional operation of the device at these or any other conditions beyond those indicated in the operational sections of the specifications is not implied. Exposure to absolute maximum rating conditions for extended periods may affect device reliability.

ELECTRICAL CHARACTERISTICS

($DV_{DD1.8}$ = $AV_{DD1.8}$ = 1.8V, AV_{CLK} = $AV_{DD3.3}$ = $DV_{DD3.3}$ = 3.3V, modulator off, 2x interpolation, DATACLK input mode, dual-port mode, 50Ω double-terminated outputs, external reference at 1.25V, T_A = -40°C to +85°C, unless otherwise noted. Typical values are at T_A = +25°C, unless otherwise noted.) (Note 2)

PARAMETER	SYMBOL	CONDITIONS		MIN	TYP	MAX	UNITS
STATIC PERFORMANCE							
Resolution					12		Bits
Differential Nonlinearity	DNL				±0.5		LSB
Integral Nonlinearity	INL				±1		LSB
Offset Error	OS			-0.025	±0.003	+0.025	%FS
Offset Drift					±0.03		ppm/°C
Full-Scale Gain Error	GE_{FS}			-4	±0.6	+4	%FS
Gain-Error Drift					±110		ppm/°C
Full-Scale Output Current	I_{OUTFS}			2		20	mA
Output Compliance				-0.5		+1.1	V
Output Resistance	R_{OUT}				1		MΩ
Output Capacitance	C_{OUT}				5		pF
DYNAMIC PERFORMANCE							
Maximum Clock Frequency	f_{CLK}			500			MHz
Minimum Clock Frequency	f_{CLK}					1	MHz
Maximum DAC Update Rate	f_{DAC}	f_{DAC} = f_{CLK} or f_{DAC} = f_{CLK}/2		500			Msps
Minimum DAC Update Rate	f_{DAC}	f_{DAC} = f_{CLK} or f_{DAC} = f_{CLK}/2				1	Msps
Maximum Input Data Rate	f_{DATA}			125			MWps
Noise Spectral Density		$f_{DATACLK}$ = 125MHz, f_{OUT} = 16MHz, f_{OFFSET} = 10MHz, -12dBFS	No interpolation		-151		dBFS/Hz
			2x interpolation		-147		
			4x interpolation		-148		
		$f_{DATACLK}$ = 125MHz, f_{OUT} = 16MHz, f_{OFFSET} = 10MHz, 0dBFS	4x interpolation		-145		

12-Bit, 500Msps Interpolating and Modulating Dual DAC with CMOS Inputs

ELECTRICAL CHARACTERISTICS (continued)

($DV_{DD1.8}$ = $AV_{DD1.8}$ = 1.8V, AV_{CLK} = $AV_{DD3.3}$ = $DV_{DD3.3}$ = 3.3V, modulator off, 2x interpolation, DATACLK input mode, dual-port mode, 50Ω double-terminated outputs, external reference at 1.25V, T_A = -40°C to +85°C, unless otherwise noted. Typical values are at T_A = +25°C, unless otherwise noted.) (Note 2)

PARAMETER	SYMBOL	CONDITIONS		MIN	TYP	MAX	UNITS
In-Band SFDR (DC to $f_{DATA}/2$)	SFDR	$f_{DATACLK}$ = 125MHz, interpolation off, 0dBFS	f_{OUT} = 10MHz		90		dBc
			f_{OUT} = 30MHz		83		
			f_{OUT} = 50MHz		72		
		$f_{DATACLK}$ = 125MHz, 2x interpolation, 0dBFS	f_{OUT} = 10MHz	77	88		
			f_{OUT} = 30MHz		83		
			f_{OUT} = 50MHz		84		
		$f_{DATACLK}$ = 125MHz, 4x interpolation, 0dBFS	f_{OUT} = 10MHz		90		
			f_{OUT} = 30MHz		84		
			f_{OUT} = 50MHz		86		
Two-Tone IMD	TTIMD	$f_{DATACLK}$ = 125MHz, f_{OUT1} = 9MHz, f_{OUT2} = 10MHz, -6.1dBFS	No interpolation		-100		dBc
			2x interpolation		-100		
			4x interpolation		-100		
		f_{DATA} = 125MHz, f_{OUT1} = 79MHz, f_{OUT2} = 80MHz, -6.1dBFS	2x interpolation, $f_{IM}/4$ complex modulation		-73		
			4x interpolation, $f_{IM}/4$ complex modulation		-75		
		$f_{DATACLK}$ = 62.5MHz, f_{OUT1} = 9MHz, f_{OUT2} = 10MHz, -6.1dBFS	8x interpolation		-99		
		$f_{DATACLK}$ = 62.5MHz, f_{OUT1} = 69MHz, f_{OUT2} = 70MHz, -6.1dBFS	8x interpolation, $f_{IM}/4$ complex modulation		-67		
		$f_{DATACLK}$ = 62.5MHz, f_{OUT1} = 179MHz, f_{OUT2} = 180MHz, -6.1dBFS	8x, highpass interpolation, $f_{IM}/4$ complex modulation		-62		
Four-Tone IMD	FTIMD	$f_{DATACLK}$ = 125MHz, f_{OUT} spaced 1MHz apart from 32MHz, -12dBFS, 2x interpolation			-93		dBc
ACLR for WCDMA (Note 3)	ACLR	$f_{DATACLK}$ = 61.44MHz, f_{OUT} = baseband	4x interpolation		74		dB
			8x interpolation		73		
		$f_{DATACLK}$ = 122.88MHz, f_{OUT} = 61.44MHz	2x interpolation, $f_{IM}/4$ complex modulation		73		
		$f_{DATACLK}$ = 122.88MHz, f_{OUT} = 122.88MHz	4x interpolation, $f_{IM}/4$ complex modulation		69		

12-Bit, 500Msps Interpolating and Modulating Dual DAC with CMOS Inputs

ELECTRICAL CHARACTERISTICS (continued)

($DV_{DD1.8}$ = $AV_{DD1.8}$ = 1.8V, AV_{CLK} = $AV_{DD3.3}$ = $DV_{DD3.3}$ = 3.3V, modulator off, 2x interpolation, DATACLK input mode, dual-port mode, 50Ω double-terminated outputs, external reference at 1.25V, T_A = -40°C to +85°C, unless otherwise noted. Typical values are at T_A = +25°C, unless otherwise noted.) (Note 2)

PARAMETER	SYMBOL	CONDITIONS	MIN	TYP	MAX	UNITS
Output Propagation Delay	t_{PD}	1x interpolation (Note 4)		2.9		ns
Output Rise Time	t_{RISE}	10% to 90% (Note 5)		0.75		ns
Output Fall Time	t_{FALL}	10% to 90% (Note 5)		1		ns
Output Settling Time		To 0.5% (Note 5)		11		ns
Output Bandwidth		-1dB bandwidth (Note 6)		240		MHz
Passband Width		Ripple < -0.01dB		0.4 x f_{DATA}		
Stopband Rejection		0.604 x f_{DATA}, 2x interpolation		100		dB
		0.604 x f_{DATA}, 4x interpolation		100		
		0.604 x f_{DATA}, 8x interpolation		100		
Data Latency		1x interpolation		22		Clock Cycles
		2x interpolation		70		
		4x interpolation		146		
		8x interpolation		311		
DAC INTERCHANNEL MATCHING						
Gain Match	ΔGain	f_{OUT} = DC - 80MHz, I_{OUTFS} = 20mA		±0.1		dB
Gain-Match Tempco	ΔGain/°C	I_{OUTFS} = 20mA		±0.02		ppm/°C
Phase Match	ΔPhase	f_{OUT} = 60MHz, I_{OUTFS} = 20mA		±0.13		Deg
Phase-Match Tempco	ΔPhase/°C	f_{OUT} = 60MHz, I_{OUTFS} = 20mA		±0.006		Deg/°C
DC Gain Match		I_{OUTFS} = 20mA	-0.2	±0.04	+0.2	dB
Channel-to-Channel Crosstalk		f_{OUT} = 50MHz, f_{DAC} = 250MHz, 0dBFS		-90		dB
REFERENCE						
Reference Input Range			0.125		1.250	V
Reference Output Voltage	V_{REFIO}	Internal reference	1.14	1.20	1.27	V
Reference Input Resistance	R_{REFIO}			10		kΩ
Reference Voltage Drift				±50		ppm/°C
CMOS LOGIC INPUT/OUTPUT (A11–A0, SELIQ/B11, DATACLK/B10, B9–B0, DATACLK)						
Input High Voltage	V_{IH}		0.7 x $DV_{DD1.8}$			V
Input Low Voltage	V_{IL}				0.3 x $DV_{DD1.8}$	V
Input Current	I_{IN}			±1	±20	µA
Input Capacitance	C_{IN}			3		pF

ELECTRICAL CHARACTERISTICS (continued)

($DV_{DD1.8}$ = $AV_{DD1.8}$ = 1.8V, AV_{CLK} = $AV_{DD3.3}$ = $DV_{DD3.3}$ = 3.3V, modulator off, 2x interpolation, DATACLK input mode, dual-port mode, 50Ω double-terminated outputs, external reference at 1.25V, T_A = -40°C to +85°C, unless otherwise noted. Typical values are at T_A = +25°C, unless otherwise noted.) (Note 2)

PARAMETER	SYMBOL	CONDITIONS	MIN	TYP	MAX	UNITS
Output High Voltage	V_{OH}	200µA load	0.8 x $DV_{DD3.3}$			V
Output Low Voltage	V_{OL}	200µA load			0.2 x $DV_{DD3.3}$	V
Output Leakage Current		Three-state		1		µA
Rise/Fall Time		C_{LOAD} = 10pF, 20% to 80%		1.6		ns
CLOCK INPUT (CLKP, CLKN)						
Differential Input Voltage Swing	V_{DIFF}	Sine-wave input		> 1.5		V_{P-P}
		Square-wave input		> 0.5		
Differential Input Slew Rate				> 100		V/µs
Common-Mode Voltage	V_{COM}	AC-coupled		$AV_{CLK}/2$		V
Input Resistance	R_{CLK}			5		kΩ
Input Capacitance	C_{CLK}			3		pF
Minimum Clock Duty Cycle				45		%
Maximum Clock Duty Cycle				55		%
CLKP/CLKN, DATACLK TIMING (Figure 4) (Notes 7, 8)						
CLK to DATACLK Delay	t_D	DATACLK output mode, C_{LOAD} = 10pF		6.2		ns
Data Hold Time, DATACLK Input/Output (Pin 14)	t_{DH}	Capturing rising edge	1.0			ns
		Capturing falling edge	2.1			
Data Setup Time, DATACLK Input/Output (Pin 14)	t_{DS}	Capturing rising edge	0.4			ns
		Capturing falling edge	-0.7			
Data Hold Time, DATACLK/B10 Input/Output (Pin 27)	t_{DH}	Capturing rising edge	1.0			ns
		Capturing falling edge	2.3			
Data Setup Time, DATACLK/B10 Input/Output (Pin 27)	t_{DS}	Capturing rising edge	0.2			ns
		Capturing falling edge	-0.4			
SERIAL PORT INTERFACE TIMING (Figure 3) (Note 7)						
SCLK Frequency	f_{SCLK}				10	MHz
$\overline{CS}$ Setup Time	t_{SS}		2.5			ns
Input Hold Time	t_{SDH}		0			ns
Input Setup Time	t_{SDS}		4.5			ns
Data Valid Duration	t_{SDV}		6.5		16.5	ns

12-Bit, 500Msps Interpolating and Modulating Dual DAC with CMOS Inputs

ELECTRICAL CHARACTERISTICS (continued)

($DV_{DD1.8}$ = $AV_{DD1.8}$ = 1.8V, AV_{CLK} = $AV_{DD3.3}$ = $DV_{DD3.3}$ = 3.3V, modulator off, 2x interpolation, DATACLK input mode, dual-port mode, 50Ω double-terminated outputs, external reference at 1.25V, T_A = -40°C to +85°C, unless otherwise noted. Typical values are at T_A = +25°C, unless otherwise noted.) (Note 2)

PARAMETER	SYMBOL	CONDITIONS	MIN	TYP	MAX	UNITS
POWER SUPPLIES						
Digital Supply Voltage	$DV_{DD1.8}$		1.71	1.8	1.89	V
Digital I/O Supply Voltage	$DV_{DD3.3}$		3.0	3.3	3.6	V
Clock Supply Voltage	AV_{CLK}		3.135	3.3	3.465	V
Analog Supply Voltage	$AV_{DD3.3}$		3.135	3.3	3.465	V
	$AV_{DD1.8}$		1.71	1.8	1.89	
Analog Supply Current	$I_{AVDD3.3}$	f_{CLK} = 250MHz, 2x interpolation, 0dBFS, f_{OUT} = 10MHz, DATACLK output mode		110	130	mA
	$I_{AVDD1.8}$	f_{CLK} = 250MHz, 2x interpolation, 0dBFS, f_{OUT} = 10MHz, DATACLK output mode		27	32	
Digital Supply Current	$I_{DVDD1.8}$	f_{CLK} = 250MHz, 2x interpolation, 0dBFS, f_{OUT} = 10MHz, DATACLK output mode		205	250	mA
Digital I/O Supply Current	$I_{DVDD3.3}$	f_{CLK} = 250MHz, 2x interpolation, 0dBFS, f_{OUT} = 10MHz, DATACLK output mode		21	32	mA
Clock Supply Current	I_{AVCLK}	f_{CLK} = 250MHz, 2x interpolation, 0dBFS, f_{OUT} = 10MHz, DATACLK output mode		3	5	mA
Total Power Dissipation	P_{TOTAL}			511		mW
Power-Down Current		All I/O are static high or low, bit 2 to bit 4 of address 00h are set high; $AV_{DD3.3}$		450		µA
		$AV_{DD1.8}$		1		
		$DV_{DD1.8}$		10		
		$DV_{DD3.3}$		100		
		AV_{CLK}		1		
$AV_{DD3.3}$ Power-Supply Rejection Ratio	$PSRR_A$	(Note 9)		0.05		%FS/V

Note 2: All specifications are 100% tested at T_A ≥ +25°C. Specifications at T_A < +25°C are guaranteed by design and characterization data.
Note 3: 3.84MHz bandwidth, single carrier.
Note 4: Excludes data latency.
Note 5: Measured single-ended into a 50Ω load.
Note 6: Excludes sin(x)/x rolloff.
Note 7: Guaranteed by design and characterization.
Note 8: Setup and hold time specifications characterized with 3.3V CMOS logic levels.
Note 9: Parameter defined as the change in midscale output caused by a ±5% variation in the nominal supply voltage.

Distributor of Maxim Integrated: Excellent Integrated System Limited
Datasheet of MAX5893EGK+D - IC DAC 12BIT DUAL 500MSPS 68-QFN
Contact us: sales@integrated-circuit.com Website: www.integrated-circuit.com

12-Bit, 500Msps Interpolating and Modulating Dual DAC with CMOS Inputs

Typical Operating Characteristics

($DV_{DD1.8}$ = $AV_{DD1.8}$ = 1.8V, AV_{CLK} = $AV_{DD3.3}$ = $DV_{DD3.3}$ = 3.3V, modulator off, 2x interpolation, output is transformer-coupled to 50Ω load, T_A = +25°C, unless otherwise noted.)

IN-BAND SFDR vs. OUTPUT FREQUENCY
f_{DATA} = 125MWps, 2x INTERPOLATION

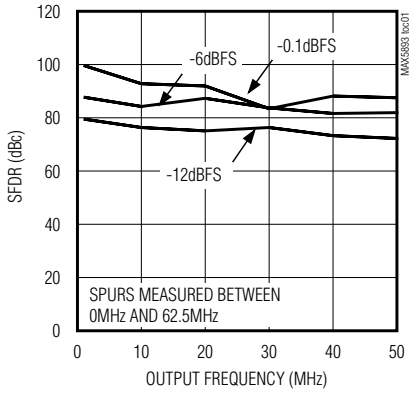

OUT-OF-BAND SFDR vs. OUTPUT FREQUENCY
f_{DATA} = 125MWps, 2x INTERPOLATION

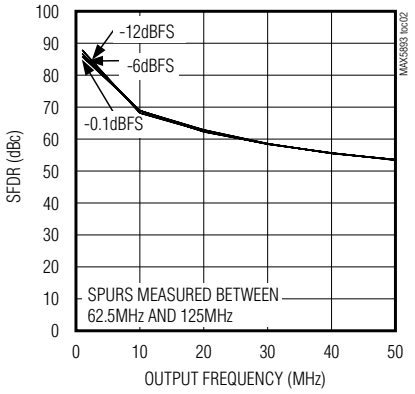

IN-BAND SFDR vs. OUTPUT FREQUENCY
f_{DATA} = 125MWps, 2x INTERPOLATION

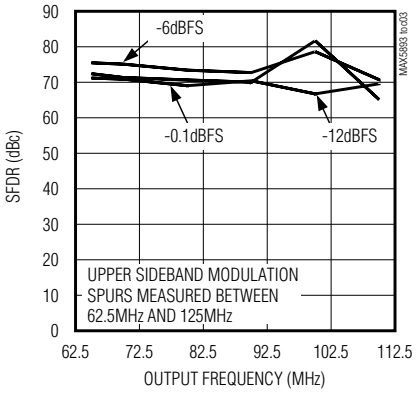

IN-BAND SFDR vs. OUTPUT FREQUENCY
f_{DATA} = 125MWps, 4x INTERPOLATION

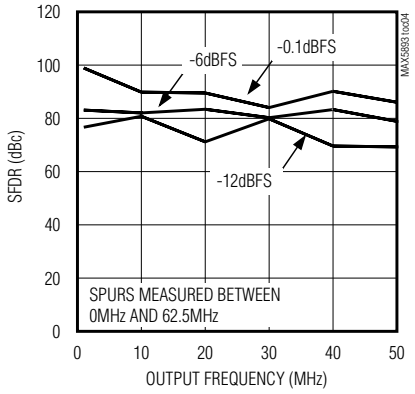

OUT-OF-BAND SFDR vs. OUTPUT FREQUENCY
f_{DATA} = 125MWps, 4x INTERPOLATION

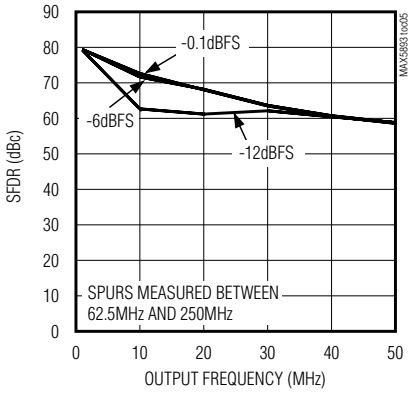

IN-BAND SFDR vs. OUTPUT FREQUENCY
f_{DATA} = 125MWps, 4x INTERPOLATION

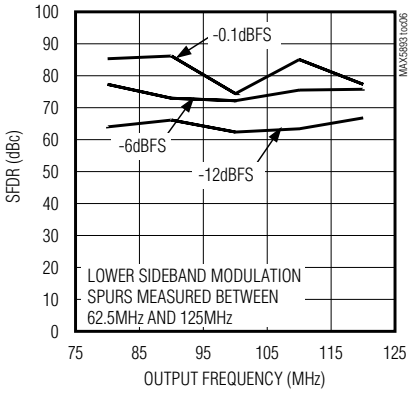

IN-BAND SFDR vs. OUTPUT FREQUENCY
f_{DATA} = 125MWps, 4x INTERPOLATION

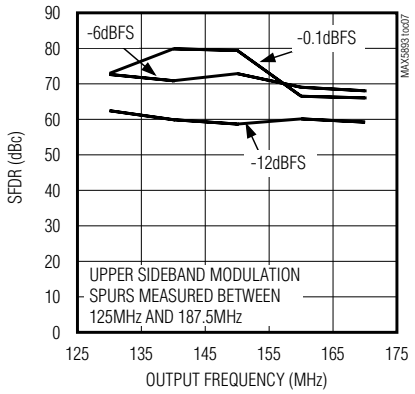

TWO-TONE IMD vs. OUTPUT FREQUENCY
f_{DATA} = 125MWps, 2x INTERPOLATION

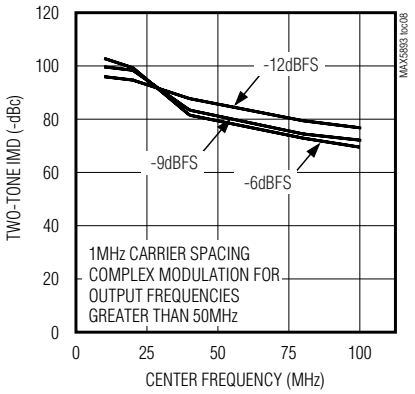

TWO-TONE IMD vs. OUTPUT FREQUENCY
f_{DATA} = 125Msps, 4x INTERPOLATION

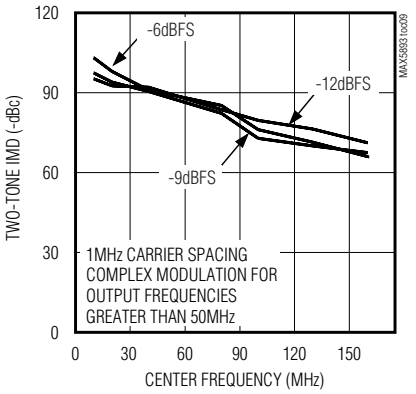

12-Bit, 500Msps Interpolating and Modulating Dual DAC with CMOS Inputs

Typical Operating Characteristics (continued)

($DV_{DD1.8}$ = $AV_{DD1.8}$ = 1.8V, AV_{CLK} = $AV_{DD3.3}$ = $DV_{DD3.3}$ = 3.3V, modulator off, 2x interpolation, output is transformer-coupled to 50Ω load, T_A = +25°C, unless otherwise noted.)

GAIN MISMATCH vs. TEMPERATURE
f_{DATA} = 125Msps, 2x INTERPOLATION

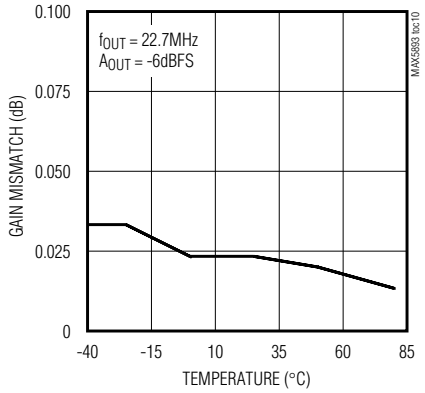

DIFFERENTIAL NONLINEARITY vs. DIGITAL INPUT CODE

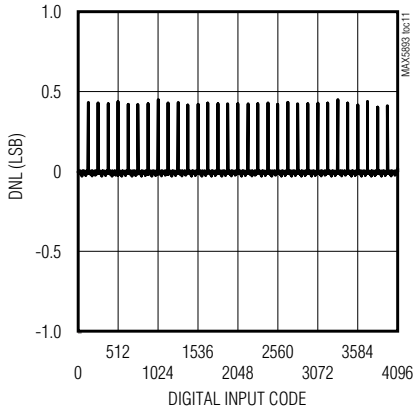

INTEGRAL NONLINEARITY vs. DIGITAL INPUT CODE

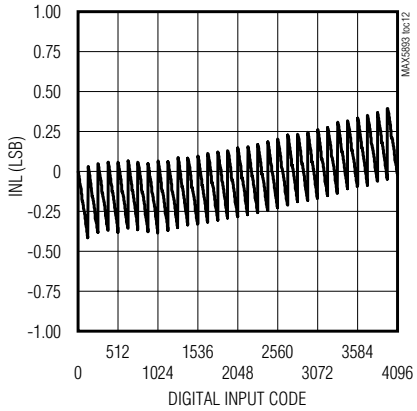

SUPPLY CURRENTS vs. DAC UPDATE RATE
2x INTERPOLATION, f_{OUT} = 5MHz

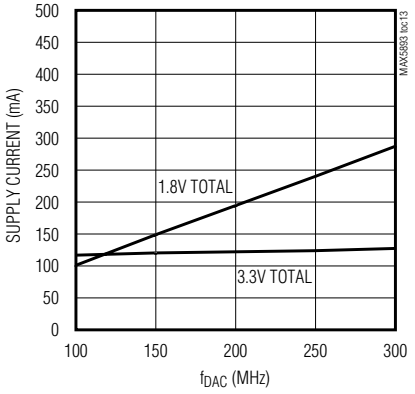

SUPPLY CURRENTS vs. DAC UPDATE RATE
4x INTERPOLATION, f_{OUT} = 5MHz

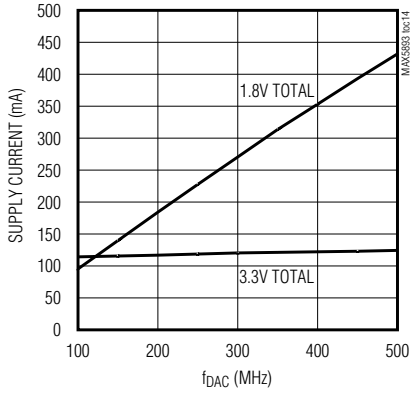

SUPPLY CURRENTS vs. DAC UPDATE RATE
8x INTERPOLATION, f_{OUT} = 5MHz

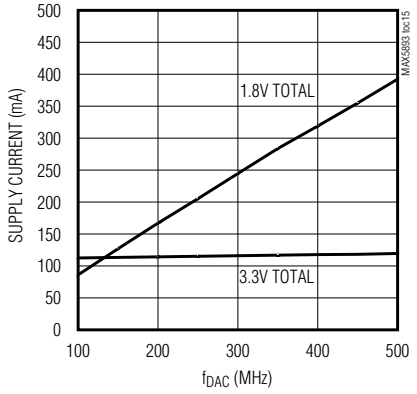

12-Bit, 500Msps Interpolating and Modulating Dual DAC with CMOS Inputs

Typical Operating Characteristics (continued)

($DV_{DD1.8}$ = $AV_{DD1.8}$ = 1.8V, AV_{CLK} = $AV_{DD3.3}$ = $DV_{DD3.3}$ = 3.3V, modulator off, 2x interpolation, output is transformer-coupled to 50Ω load, T_A = +25°C, unless otherwise noted.)

WCDMA ACLR vs. OUTPUT FREQUENCY
f_{DATA} = 122.88MWps, 4x INTERPOLATION

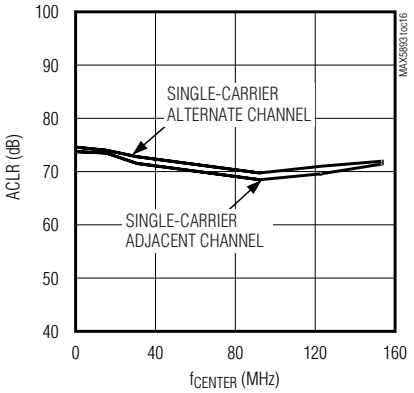

WCDMA ACLR vs. OUTPUT FREQUENCY
f_{DATA} = 76.8MWps, 4x INTERPOLATION

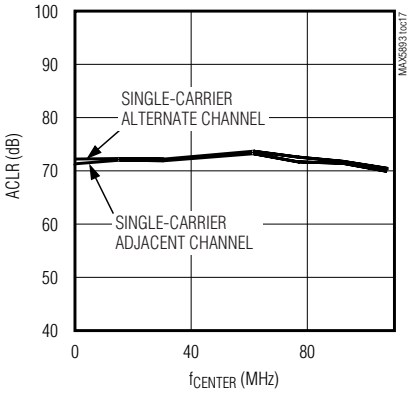

WCDMA ACLR SPECTRAL PLOT
f_{DATA} = 61.44MWps, 8x INTERPOLATION

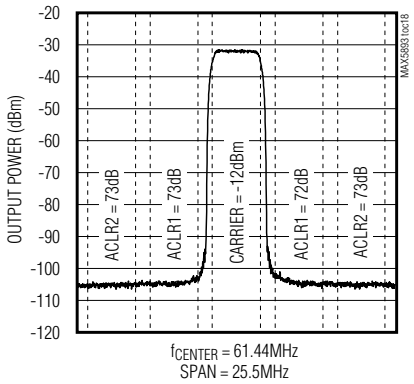

WCDMA ACLR SPECTRAL PLOT
f_{DATA} = 122.88MWps, 4x INTERPOLATION

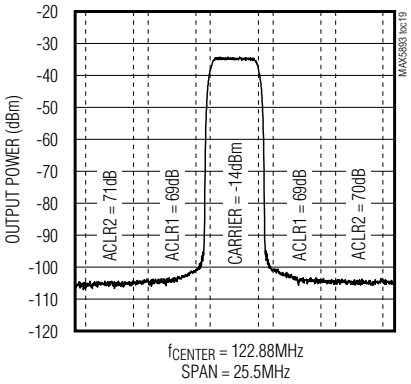

12-Bit, 500Msps Interpolating and Modulating Dual DAC with CMOS Inputs

Pin Description

PIN	NAME	FUNCTION
1	CLKP	Noninverting Differential Clock Input
2	CLKN	Inverting Differential Clock Input
3, 4, 5, 22–25, 40–43	N.C.	Internally Connected. Do not connect.
6, 21, 30, 37	$DV_{DD1.8}$	Digital Power Supply. Accepts a 1.71V to 1.89V supply range. Bypass each pin to ground with a 0.1µF capacitor as close to the pin as possible.
7–12, 15–20	A11–A0	A-Port Data Inputs. Dual-port mode: I-channel data input. Data is latched on the rising/falling edge (programmable) of the DATACLK. Single-port mode: I-channel and Q-channel data input, with SELIQ.
13, 44	$DV_{DD3.3}$	CMOS I/O Power Supply. Accepts a 3.0V to 3.6V supply range. Bypass each pin to ground with a 0.1µF capacitor as close to the pin as possible.
14	DATACLK	Programmable Data Clock Input/Output. See the *DATACLK Modes* section for details.
26	SELIQ/B11	Select I/Q-Channel Input or B-Port MSB Input. Single-port mode: If SELIQ = LOW, data is latched into Q-channel on the rising/falling edge (programmable) of the DATACLK. If SELIQ = HIGH, data is latched into I-channel on the rising/falling edge (programmable) of the DATACLK. Dual-port mode: Q-channel MSB input.
27	DATACLK/B10	Alternate DATACLK Input/Output or B-Port Bit 10 Input. Single-port mode: See the *DATACLK Modes* section for details. Dual-port mode: Q-channel bit 10 input. If unused connect to GND.
28, 29, 31–36, 38, 39	B9–B0	B-Port Data Bits 9–0. Dual-port mode: Q-channel inputs. Data is latched on the rising/falling (programmable) edge of the DATACLK. Single-port mode: Connect to GND.
45	SDO	Serial-Port Data Output
46	SDI	Serial-Port Data Input
47	SCLK	Serial-Port Clock Input. Data on SDI is latched on the rising edge of SCLK.
48	$\overline{CS}$	Serial-Port Interface Select. Drive $\overline{CS}$ low to enable serial-port interface.
49	$\overline{RESET}$	Reset Input. Set $\overline{RESET}$ low during power-up.
50	REFIO	Reference Input/Output. Bypass to ground with a 1µF capacitor as close to the pin as possible.
51	DACREF	Current-Set Resistor Return Path. For a 20mA full-scale output current, connect a 2kΩ resistor between FSADJ and DACREF. Internally connected to GND. **Do not use as an external ground connection.**
52	FSADJ	Full-Scale Adjust Input. This input sets the full-scale output current of the DAC. For a 20mA full-scale output current, connect a 2kΩ resistor between FSADJ and DACREF.

Distributor of Maxim Integrated: Excellent Integrated System Limited
Datasheet of MAX5893EGK+D - IC DAC 12BIT DUAL 500MSPS 68-QFN
Contact us: sales@integrated-circuit.com Website: www.integrated-circuit.com

12-Bit, 500Msps Interpolating and Modulating Dual DAC with CMOS Inputs

Pin Description (continued)

PIN	NAME	FUNCTION
53, 67	$AV_{DD1.8}$	Low Analog Power Supply. Accepts a 1.71V to 1.89V supply range. Bypass each pin to GND with a 0.1µF capacitor as close to the pin as possible.
54, 56, 59, 61, 64, 66	GND	Ground
55, 60, 65	$AV_{DD3.3}$	Analog Power Supply. Accepts a 3.135V to 3.465V supply range. Bypass each pin to GND with a 0.1µF capacitor as close to the pin as possible.
57	OUTQN	Inverting Differential DAC Current Output for Q-Channel
58	OUTQP	Noninverting Differential DAC Current Output for Q-Channel
62	OUTIN	Inverting Differential DAC Current Output for I-Channel
63	OUTIP	Noninverting Differential DAC Current Output for I-Channel
68	AV_{CLK}	Clock Power Supply. Accepts a 3.135V to 3.465V supply range. Bypass to ground with a 0.1µF capacitor as close to the pin as possible.
—	EP	Exposed Pad. Must be connected to GND through a low-impedance path.

Functional Diagram

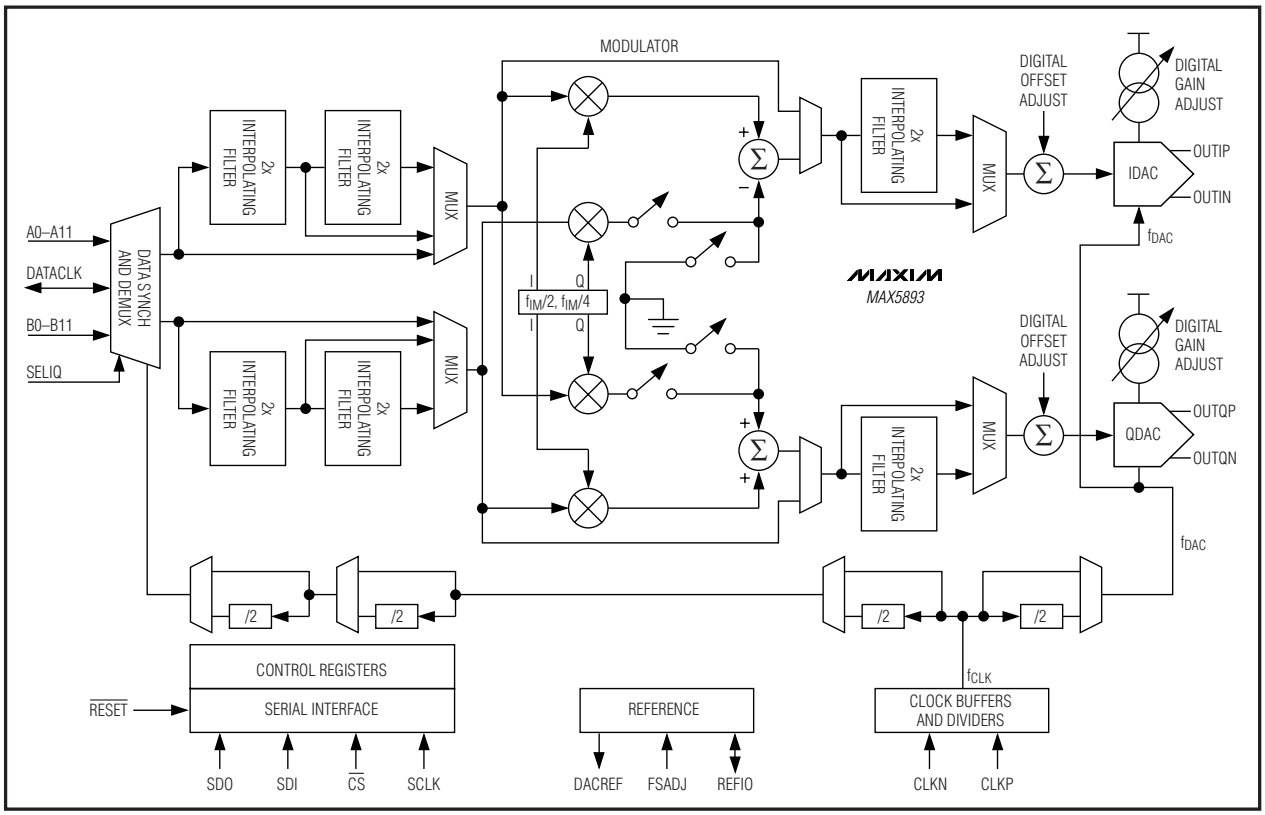

12-Bit, 500Msps Interpolating and Modulating Dual DAC with CMOS Inputs

Detailed Description

The MAX5893 dual, 500Msps, high-speed, 12-bit, current-output DAC provides superior performance in communication systems requiring low-distortion analog-signal reconstruction. The MAX5893 combines two DAC cores with 8x/4x/2x/1x programmable digital interpolation filters, a digital quadrature modulator, an SPI-compatible serial interface for programming the device, and an on-chip 1.20V reference. The full-scale output current range is programmable from 2mA to 20mA to optimize power dissipation and gain control.

Each channel contains three selectable interpolating filters making the MAX5893 capable of 1x, 2x, 4x, or 8x interpolation, which allows for low-input and high-output data rates. When operating in 8x interpolation mode, the interpolator increases the DAC conversion rate by a factor of eight, providing an eight-fold increase in separation between the reconstructed waveform spectrum and its first image. The MAX5893 accepts either two's complement or offset binary input data format and can operate from either a single- or dual-port input bus.

The MAX5893 includes modulation modes at $f_{IM}/2$ and $f_{IM}/4$, where f_{IM} is the data rate at the input of the modulator. If 2x interpolation is used, this data rate is 2x the input data rate. If 4x or 8x interpolation is used, this data rate is 4x the input data rate. Table 1 summarizes the modulator operating data rates for dual-port mode.

The power-down modes can be used to turn off each DAC's output current or the entire digital section. Programming both DACs into power-down simultaneously will automatically power down the digital interpolator filters. Note the SPI section is always active.

The analog and digital sections of the MAX5893 have separate power-supply inputs ($AV_{DD3.3}$, $AV_{DD1.8}$, AV_{CLK}, $DV_{DD3.3}$, and $DV_{DD1.8}$), which minimize noise coupling from one supply to the other. $AV_{DD1.8}$ and $DV_{DD1.8}$ operate from a typical 1.8V supply, and all other supply inputs operate from a typical 3.3V supply.

Serial Interface

The SPI-compatible serial interface programs the MAX5893 registers. The serial interface consists of the $\overline{CS}$, SDI, SCLK, and SDO. Data is shifted into SDI on the rising edge of the SCLK when $\overline{CS}$ is low. When $\overline{CS}$ is high, data presented at SDI is ignored and SDO is in high-impedance mode. **Note: $\overline{CS}$ must transition high after each read/write operation.** SDO is the serial data output for reading registers to facilitate easy debugging during development. SDI and SDO can be connected together to form a 3-wire serial interface bus or remain separate and form a 4-wire SPI bus.

The serial interface supports two-byte transfer in a communication cycle. The first byte is a control byte written to the MAX5893 only. The second byte is a data byte and can be written to or read from the MAX5893.

Table 1. Quadrature Modulator Operating Data Rates (f_{IM} is the Data Rate at the Input of the Modulator) for Dual-Port Mode

INTERPOLATION RATE	MODULATION MODE (f_{LO})	MODULATION FREQUENCY RELATIVE TO f_{DAC}	MODULATION FREQUENCY RELATIVE TO f_{DATA}
1x	$f_{IM}/2$	$f_{DAC}/2$	$f_{DATA}/2$
	$f_{IM}/4$	$f_{DAC}/4$	$f_{DATA}/4$
2x	$f_{IM}/2$	$f_{DAC}/2$	f_{DATA}
	$f_{IM}/4$	$f_{DAC}/4$	$f_{DATA}/2$
4x	$f_{IM}/2$	$f_{DAC}/2$	$2 \times f_{DATA}$
	$f_{IM}/4$	$f_{DAC}/4$	f_{DATA}
8x	$f_{IM}/2$	$f_{DAC}/4$	$2 \times f_{DATA}$
	$f_{IM}/4$	$f_{DAC}/8$	f_{DATA}

12-Bit, 500Msps Interpolating and Modulating Dual DAC with CMOS Inputs

When writing to the MAX5893, data is shifted into SDI; data is shifted out of SDO in a read operation. Bits 0 to 3 of the control byte are the address bits. These bits set the address of the register to be written to or read from. Bits 4 to 6 of the control byte must always be set to 0. Bit 7 is a read/write bit: 0 for write operation and 1 for read operation. The most significant bit (MSB) is shifted in first in default mode. If the serial port is set to LSB-first mode, both the control byte and data byte are shifted LSB in first. Figures 1 and 2 show the SPI serial interface operation in the default write and read mode, respectively. Figure 3 is a timing diagram for the SPI serial interface.

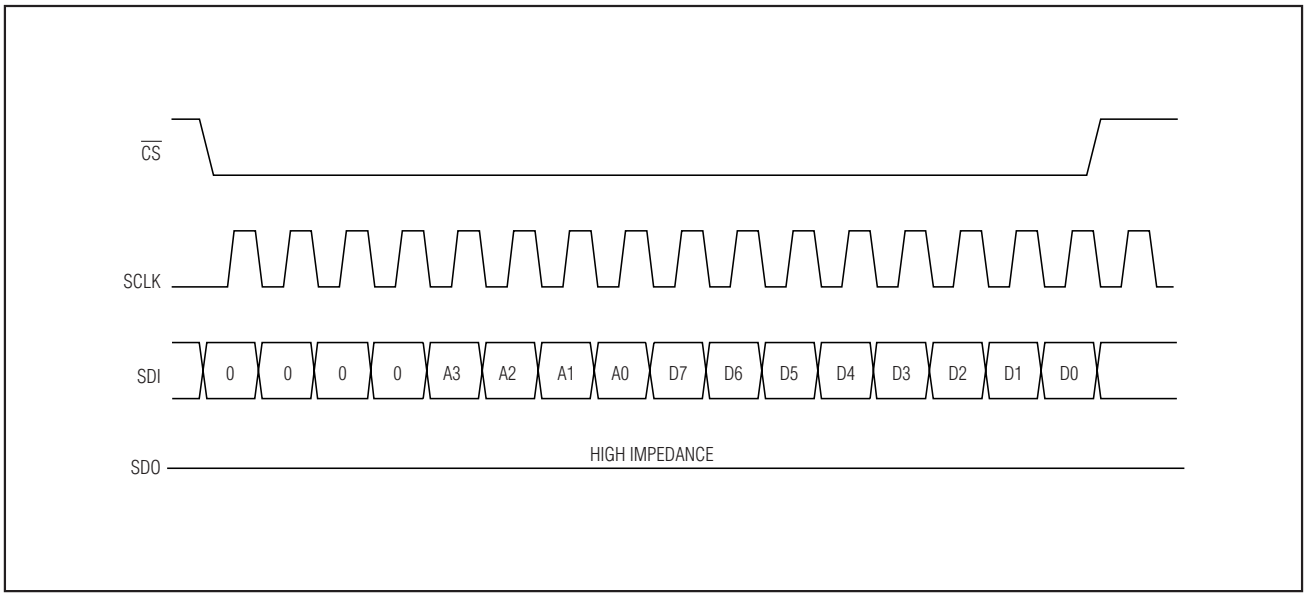

Figure 1. SPI Serial Interface Write Cycle, MSB-First Mode

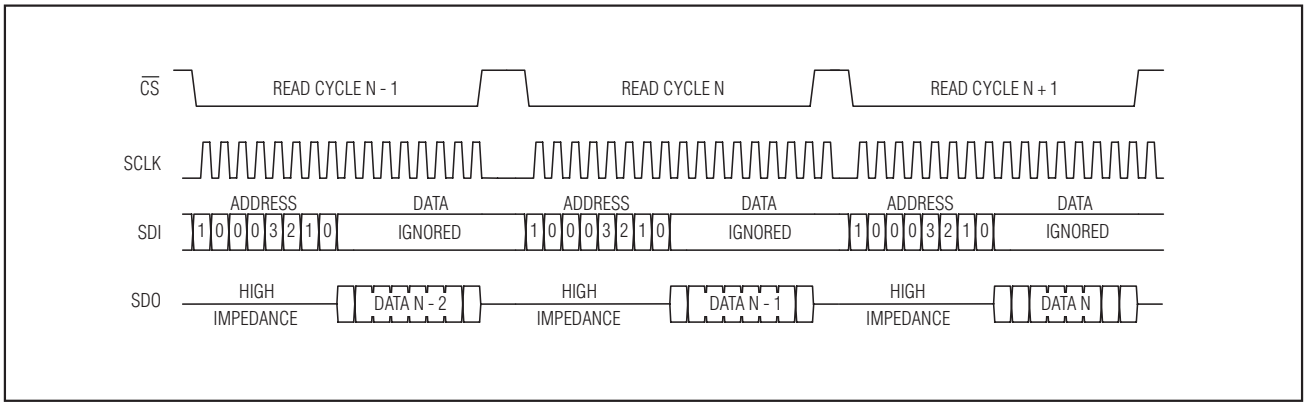

Figure 2. SPI Serial Interface Read Cycle, MSB-First Mode

12-Bit, 500Msps Interpolating and Modulating Dual DAC with CMOS Inputs

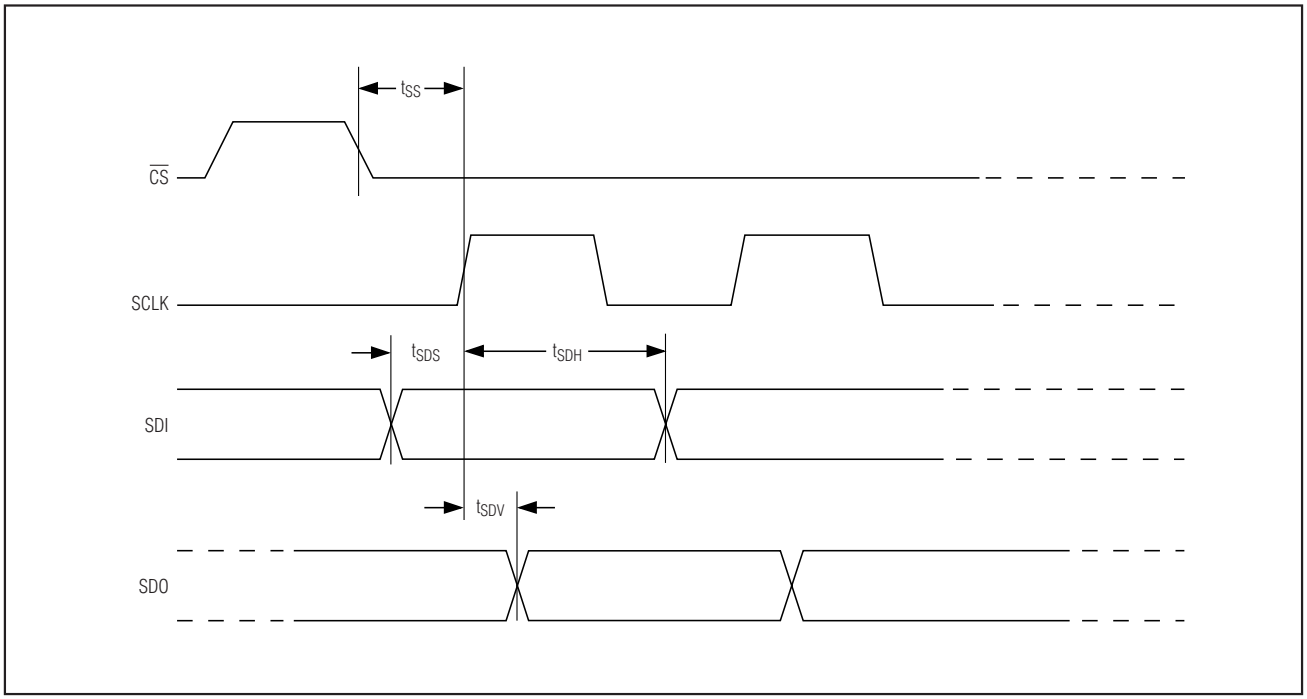

Figure 3. SPI Serial-Interface Timing Diagram

Distributor of Maxim Integrated: Excellent Integrated System Limited
Datasheet of MAX5893EGK+D - IC DAC 12BIT DUAL 500MSPS 68-QFN
Contact us: sales@integrated-circuit.com Website: www.integrated-circuit.com

12-Bit, 500Msps Interpolating and Modulating Dual DAC with CMOS Inputs

Programming Registers

Programming its registers with the SPI serial interface sets the MAX5893 operation modes. Table 2 shows all of the registers. The following are descriptions of each register.

Table 2. MAX5893 Programmable Registers

ADD	BIT 7	BIT 6	BIT 5	BIT 4	BIT 3	BIT 2	BIT 1	BIT 0
00h	Unused	**0 = MSB first** 1 = LSB first	Software Reset **0 = Normal** 1 = Reset all registers	Interpolator Power-Down **0 = Normal** 1 = Power-down	IDAC Power-Down **0 = Normal** 1 = Power-down	QDAC Power-Down **0 = Normal** 1 = Power-down	Unused	
01h	Interpolation Rate (Bit 7, Bit 6) 00 = No interpolation 01 = 2x interpolation 10 = 4x interpolation **11 = 8x interpolation**		Third Interpolation Filter Configuration **0 = Lowpass** 1 = Highpass	Modulation Mode (Bit 4, Bit 3) 00 = Modulation off 01 = $f_{IM}/2$ **10 = $f_{IM}/4$** 11 = $f_{IM}/4$		Mixer Modulation Mode 0 = Complex **1 = Real**	Modulation Sign **0 = $e^{-j\omega}$** 1 = $e^{+j\omega}$	Unused
02h	**0 = Two's complement input data** 1 = Offset binary input data	**0 = Single port (A), interleaved I/Q** 1 = Dual port I/Q input	**0 = Clock output on DATACLK** 1 = Clock output on DATACLK/B10	**0 = Input data latched on rising clock edge** 1 = Input data latched on falling clock edge	**0 = Data clock input enabled** 1 = Data clock output enabled	Data Synchronizer **0 = Enabled** 1 = Disabled	Unused	
03h	Unused							
04h	8-Bit IDAC Fine-Gain Adjustment (see the *Gain Adjustment* section). Bit 7 is MSB and bit 0 is LSB. **Default: 00h**							
05h	Unused				4-Bit IDAC Coarse-Gain Adjustment (see the *Gain Adjustment* section). Bit 3 is MSB and bit 0 is LSB. **Default: Fh**			
06h	10-Bit IDAC Offset Adjustment (see the *Offset Adjustment* section). Bits 7 to 0 of the 06h register are the MSB bits. Bit 1 and bit 0 are the LSB bits in 07h register. **Default: 000h**							
07h	IDAC IOFFSET Direction **0 = Current on OUTIN** 1 = Current on OUTIP	Unused					IDAC Offset Adjustment Bit 1 (see 06h register)	IDAC Offset Adjustment Bit 0 (see 06h register)
08h	8-Bit QDAC Fine-Gain Adjustment (see the *Gain Adjustment* section). Bit 7 is MSB and bit 0 is LSB. **Default: 00h**							
09h	Unused				4-Bit QDAC Coarse-Gain Adjustment (see the *Gain Adjustment* section). Bit 3 is MSB and bit 0 is LSB. **Default: Fh**			
0Ah	10-Bit QDAC Offset Adjustment (see the *Offset Adjustment* section). Bits 7 to 0 of the 0Ah register are the MSB bits. Bit 1 and bit 0 are the LSB bits in 0Bh register. **Default: 000h**							
0Bh	QDAC IOFFSET Direction **0 = Current on OUTQN** 1 = Current on OUTQP	Unused					QDAC Offset Adjustment Bit 1 (see 0Ah register)	QDAC Offset Adjustment Bit 0 (see 0Ah register)
0Ch	Reserved, do not write to these bits.							
0Dh	Reserved, do not write to these bits.							
0Eh	Reserved, do not write to these bits.							

*Conditions in **bold** are default states after reset.*

12-Bit, 500Msps Interpolating and Modulating Dual DAC with CMOS Inputs

Address 00h

Bit 6 Logic 0 (default) causes the serial port to use MSB first address/data format. When set to a logic 1, the serial port will use LSB first address/data format.

Bit 5 When set to a logic 1, all registers reset to their default state (this bit included).

Bit 4 Logic 1 stops the clock to the digital interpolators. DAC outputs hold last value prior to interpolator power-down.

Bit 3 IDAC power-down mode. A logic 1 to this bit powers down the IDAC.

Bit 2 QDAC power-down mode. A logic 1 to this bit powers down the QDAC.

Note: If both bit 2 and bit 3 are 1, the MAX5893 is in full-power-down mode, leaving only the serial interface active.

Address 01h

Bits 7, 6 Configure the interpolation filters according to the following table:

00	1x (no interpolation)
01	2x
10	4x
11	8x (default)

Bit 5 Logic 0 configures FIR3 as a lowpass digital filter (default). A logic 1 configures FIR3 as a highpass digital filter.

Bits 4, 3 Configure the modulation frequency according to the following table:

00	No modulation
01	$f_{IM}/2$ modulation
10	$f_{IM}/4$ modulation (default)
11	$f_{IM}/4$ modulation

where f_{IM} is the data rate at the input of the modulator.

Bit 2 Configures the modulation mode for either real or complex (image reject) modulation. Logic 1 sets the modulator to the real mode (default). Complex modulation is only available for $f_{IM}/4$ modulation.

Bit 1 Quadrature modulator sign inversion. With I-channel data leading Q-channel data by 90°, logic 0 sets the complex modulation to be e^{-jw} (default), cancelling the upper image when used with an external quadrature modulator. A logic 1 sets the complex modulation to be e^{+jw}, cancelling the lower image when used with an external quadrature modulator.

Address 02h

Bit 7 Logic 0 (default) configures the data port for two's complement. A logic 1 configures the data ports for offset binary.

Bit 6 Logic 0 (default) configures the data bus for single-port, interleaved I/Q data. I and Q data enter through one 12-bit bus. Logic 1 configures the data bus for dual-port I/Q data. I and Q data enter on separate buses.

Bit 5 Logic 0 (default) configures the data clock for pin 14. A logic 1 configures the data clock for pin 27 (DATACLK/B10).

Bit 4 Logic 0 (default) sets the internal latches to latch the data on the rising edge of DATACLK. A logic 1 sets the internal latches to latch the data on the falling edge of DATACLK.

Bit 3 Logic 0 (default) configures the DATACLK pin (pin 14 or pin 27) to be an input. A logic 1 configures the DATACLK pin to be an output.

Bit 2 Logic 0 (default) enables the data synchronizer circuitry. A logic 1 disables the data synchronizer circuitry.

Address 03h

Bits 7–0 Unused.

Address 04h

Bits 7–0 These 8 bits define the binary number for fine-gain adjustment of the IDAC full-scale current (see the *Gain Adjustment* section). Bit 7 is the MSB. Default is all zeros.

Address 05h

Bits 3–0 These four bits define the binary number for the coarse-gain adjustment of the IDAC full-scale current (see the *Gain Adjustment* section). Bit 3 is the MSB. Default is all ones.

Address 06h, Bits 7 to 0; Address 07h, Bit 1 and Bit 0

These 10 bits represent a binary number that defines the magnitude of the offset added to the IDAC output (see the *Offset Adjustment* section). Default is all zeros.

Distributor of Maxim Integrated: Excellent Integrated System Limited
Datasheet of MAX5893EGK+D - IC DAC 12BIT DUAL 500MSPS 68-QFN
Contact us: sales@integrated-circuit.com Website: www.integrated-circuit.com

Address 07h

Bit 7 Logic 0 (default) adds the 10 bits offset current to OUTIN. A logic 1 adds the 10 bits offset current to OUTIP.

Address 08h

Bits 7–0 These 8 bits define the binary number for fine-gain adjustment of the QDAC full-scale current (see the *Gain Adjustment* section). Bit 7 is the MSB. Default is all zeros.

Address 09h

Bits 3–0 These 4 bits define the binary number for the coarse-gain adjustment of the QDAC full-scale current (see the *Gain Adjustment* section). Bit 3 is the MSB. Default is all ones.

Address 0Ah, Bits 7 to 0; Address 0Bh, Bit 1 and Bit 0

These 10 bits represent a binary number that defines the magnitude of the offset added to the QDAC output (see the *Offset Adjustment* section). Default is all zeros.

Address 0Bh

Bit 7 Logic 0 (default) adds the 10 bits offset to OUTQN. A logic 1 adds the 10 bits offset to OUTQP.

Offset Adjustment

Offset adjustment is achieved by adding a digital code to the DAC inputs. The code OFFSET (see equation below), as stored in the relevant control registers, has a range from 0 to 1023 and a sign bit. The applied DAC offset is 4 times the code stored in the register, providing an offset adjustment range of ±255 LSB codes. The resolution is 1 LSB.

$$I_{OFFSET} = \frac{4 \times OFFSET}{2^{16}} \times I_{OUTFS}$$

Gain Trim

Gain trimming is done by varying the full-scale current according to the following formula:

$$I_{OUTFS} = \left[\left(\frac{3 \times I_{REF}}{4}\right)\left(\frac{COARSE + 1}{16}\right) - \left(\frac{3 \times I_{REF}}{32}\right)\left(\frac{FINE}{256}\right)\right]\left(\frac{1024}{24}\right)$$

where I_{REF} is the reference current (see the *Internal Reference* section). COARSE is the register content of registers 05h and 09h for the I- and Q-channel, respectively. FINE is the register content of register 04h and 08h for the I- and Q-channel, respectively. The range of coarse is from 0 to 11, with 11 being the default. The range for FINE is from 0 to 255 with 0 being the default. Given this, the gain can be adjusted in steps of approximately 0.01dB.

Single-Port/Dual-Port Data Input Modes

The MAX5893 is capable of capturing data in single-port and dual-port modes (selected through bit 6, address 02h). In single-port mode, the data for both channels is input through the A port (A11–A0). The channel for the input data is determined through the state of the SELIQ/B11 (pin 26) bit. When SELIQ is set to logic-high, the input data is presented to the I-channel, when set to logic-low, the input data is presented to the Q-channel. The unused B-port inputs (DATACLK/B10, B9–B0) should be grounded when running in single-port mode.

Dual-port mode, as the name implies, requires that each channel receives its data from a separate data bus. SELIQ/B11 and DATACLK/B10 revert to data bit inputs for the Q-channel in dual-port mode.

The MAX5893 control registers can be programmed to allow either signed or unsigned binary format (bit 7, address 02h) data in either single-port or dual-port mode. Table 3 shows the corresponding DAC output levels when using signed or unsigned data modes.

Table 3. DAC Output Code Table

DIGITAL INPUT CODE		OUT_P	OUT_N
OFFSET BINARY (UNSIGNED)	TWO'S COMPLEMENT (SIGNED)		
0000 0000 0000	1000 0000 0000	0	I_{OUTFS}
0111 1111 1111	0000 0000 0000	$I_{OUTFS}/2$	$I_{OUTFS}/2$
1111 1111 1111	0111 1111 1111	I_{OUTFS}	0

Data Synchronization Modes

Data synchronization circuitry is provided to allow operation with an input data clock. The data clock must be frequency locked to the DAC clock (f_{DAC}), but can have arbitrary phase with respect to the DAC clock. The synchronization circuitry allows for phase jitter on the input data clock of up to ±1 data clock cycles. Synchronization is initially established when the reset pin is asynchronously deasserted and the input data clock has been running for at least 4 clock cycles. Subsequently, the MAX5893 monitors the phase rela-

12-Bit, 500Msps Interpolating and Modulating Dual DAC with CMOS Inputs

tionship and detects if the phase drifts more than ±1 data clock cycle. If this occurs, the synchronizer automatically reestablishes synchronization. However, during the resynchronization phase, up to 8 data words may be lost or repeated.

Bit 2 of register 02h disables or enables (default) the automatic data clock phase detection. Disabling the data synchronization circuitry requires the data clock and the DAC clock phase to be locked.

DATACLK Modes

The MAX5893 has a main DATACLK available at pin 14. An alternate DATACLK is available at pin 27 (DATACLK/B10) when configured in single-port data input mode (bit 5, address 02h). The DATACLK can be configured to accept an input clock signal for latching the input data, or to source a clock signal that can drive up to 10pF load while latching the input data (bit 3, address 02h). If DATACLK is configured as an output, it is frequency divided from the CLKP/CLKN input, depending on the operating mode, see Table 4.

Table 4. Clock Frequency Ratios in Various Modes

INPUT MODE	INTERPOLATION RATE	$f_{DATA}:f_{CLK}$	$f_{DAC}:f_{CLK}$
Single Port	1x	1:1	1:2
	2x	1:1	1:1
	4x	1:2	1:1
	8x	1:4	1:1
Dual Port	1x	1:1	1:1
	2x	1:2	1:1
	4x	1:4	1:1
	8x	1:8	1:1

The MAX5893 can be configured to latch the input data on either the rising edge or falling edge of the DATACLK signal (bit 4, address 02h). Figure 4 shows the timing requirements between the DATACLK signal and the input data bus with latching on the rising edge.

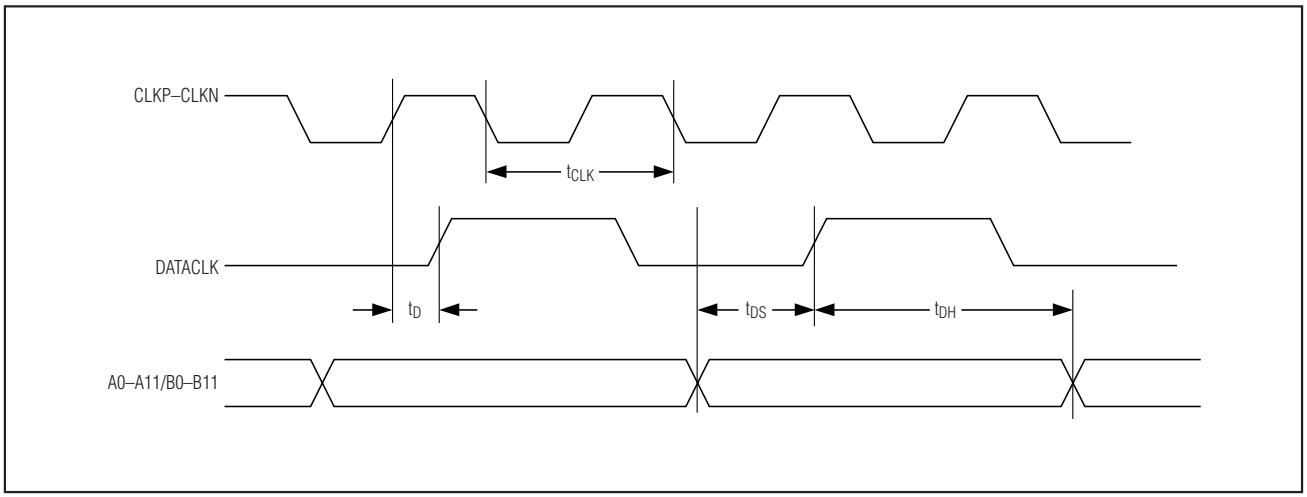

Figure 4. Data Input Timing Diagram

12-Bit, 500Msps Interpolating and Modulating Dual DAC with CMOS Inputs

Interpolating Filter

The MAX5893 features three cascaded FIR half-band filters. The interpolating filters are enabled or disabled in combinations to support 1x (no interpolation), 2x, 4x, or 8x interpolation. Bits 7 and 6 of register 01h set the interpolation rate (see Table 2). The last interpolation filter is located after the modulator. In the 8x interpolation mode, the last filter (FIR3) can be configured as lowpass or highpass (bit 5, address 01h) to select the lower or upper sideband from the modulation output. The frequency responses of these three filters are plotted in Figures 5–8.

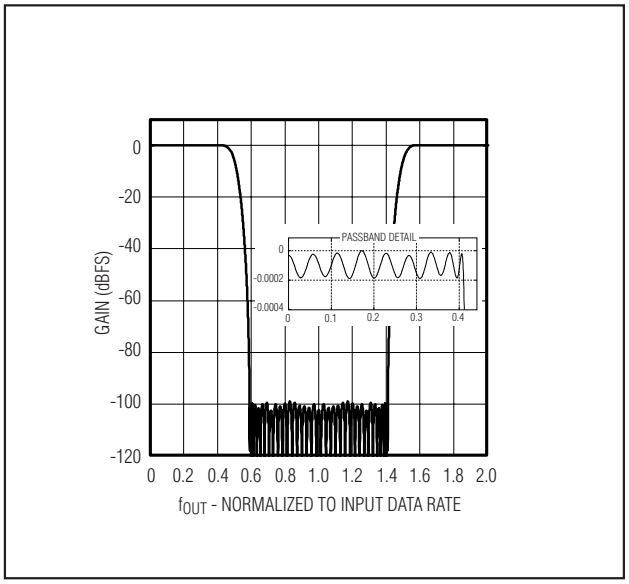

Figure 5. Interpolation Filter Frequency Response, 2x Interpolation Mode

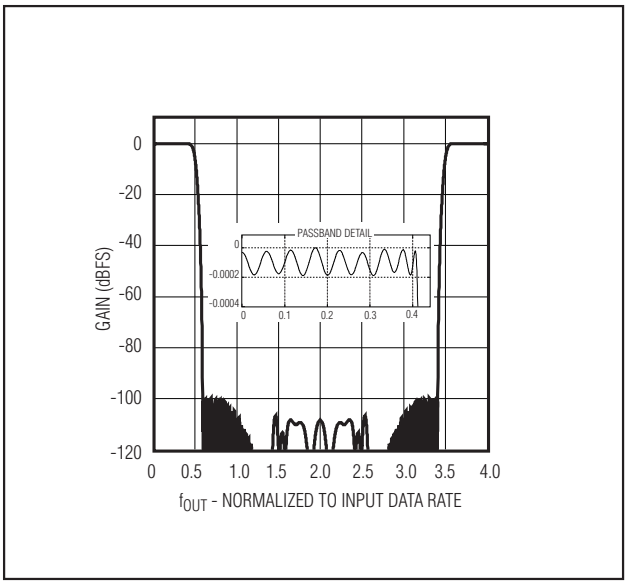

Figure 6. Interpolation Filter Frequency Response, 4x Interpolation Mode

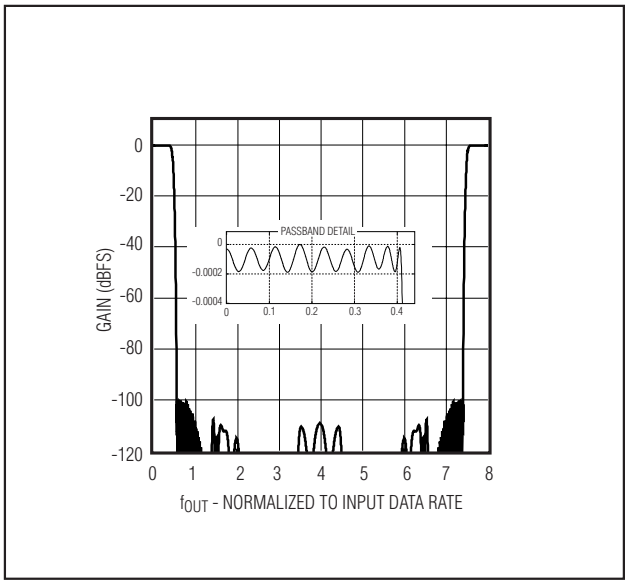

Figure 7. Interpolation Filter Frequency Response, 8x Interpolation Mode (FIR3 Lowpass Mode)

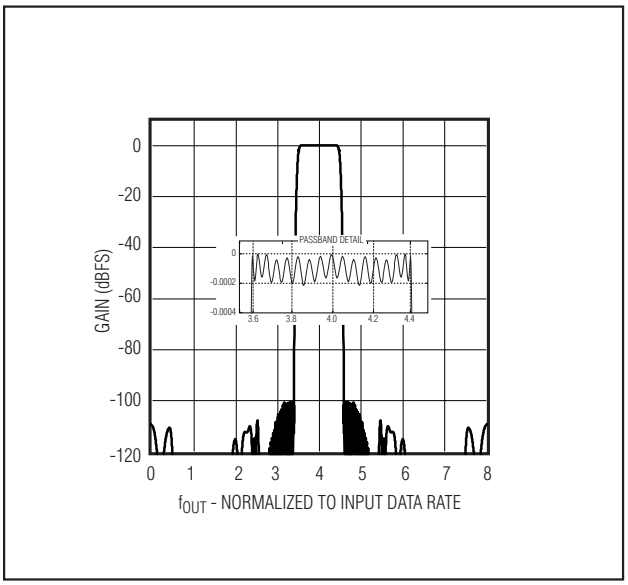

Figure 8. Interpolation Filter Frequency Response, 8x Interpolation Mode (FIR3 Highpass Mode)

12-Bit, 500Msps Interpolating and Modulating Dual DAC with CMOS Inputs

The programmable interpolation filters multiply the MAX5893 input data rate by a factor of 2x, 4x, or 8x to separate the reconstructed waveform spectrum and the DAC image. The original spectral images, appearing at around multiples of the input data rate, are attenuated by the internal digital filters. This feature provides three benefits:

1) Image separation reduces complexity of analog reconstruction filters.
2) Lower input data rates eliminate board-level high-speed data transmission.
3) Sin(x)/x rolloff is reduced over the effective bandwidth.

Figure 9 illustrates a practical example of the benefits when using the MAX5893 in 2x, 4x, and 8x interpolation modes with the third filter configured as a lowpass filter. With no interpolation filter, the first image signal appears in the second Nyquist zone between $f_S/2$ and f_S. The first interpolating filter removes this image. In fact, all of the

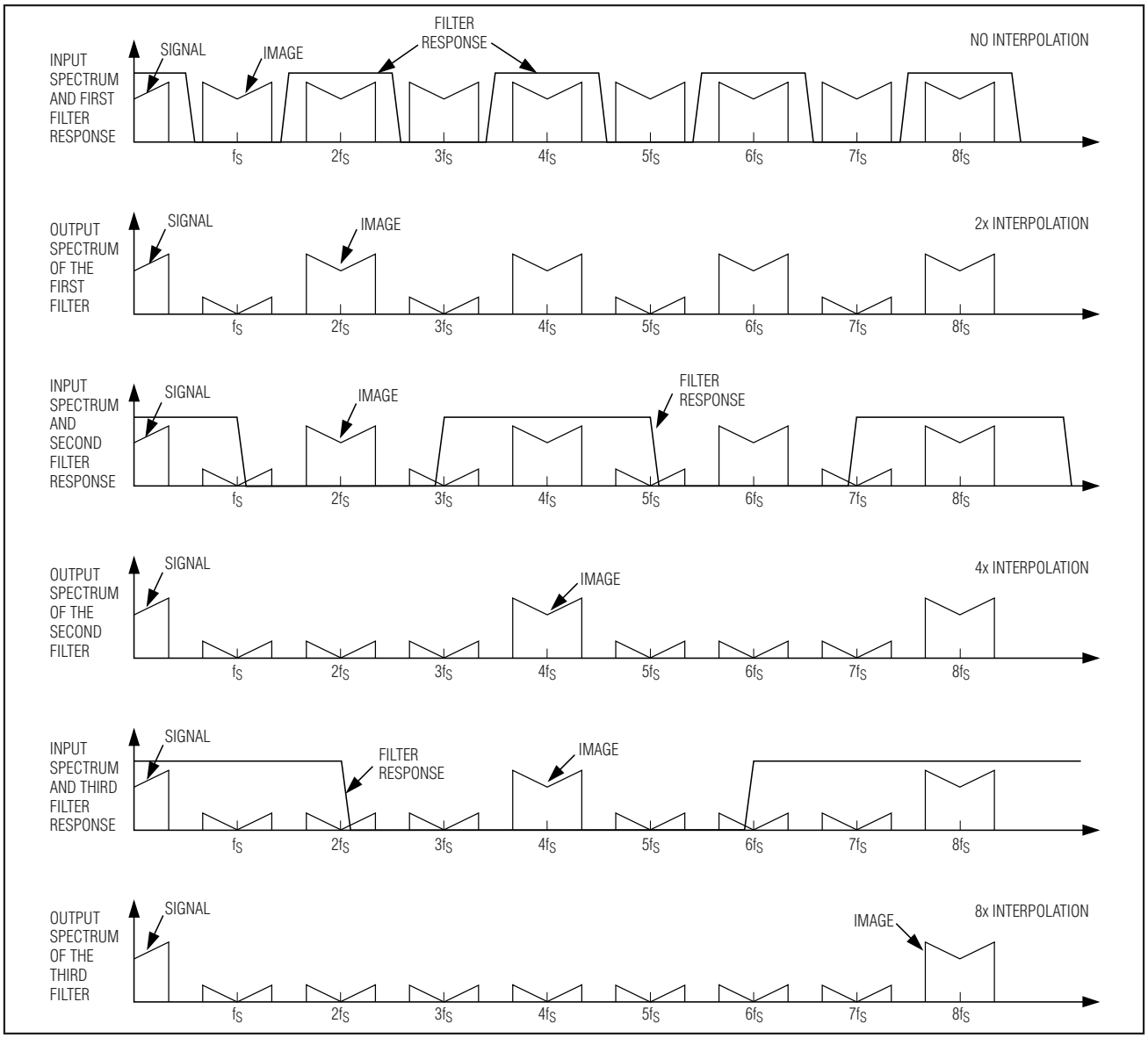

Figure 9. Spectral Representation of Interpolating Filter Responses (Output Frequencies are Relative to the Data Input Frequency, f_S)

images at odd numbers of f_S are filtered. At the output of the first filter, the images are at $2f_S$, $4f_S$, etc. This signal is then passed to the second interpolating filter, which is similar to the first filter and removes the images at $2f_S$, $6f_S$, $10f_S$, etc. Finally, the third filter removes images at $4f_S$, $12f_S$, $20f_S$, etc. Figures 10, 11, and 12 similarly illustrate the spectral responses when using the interpolating filters combined with the digital modulator.

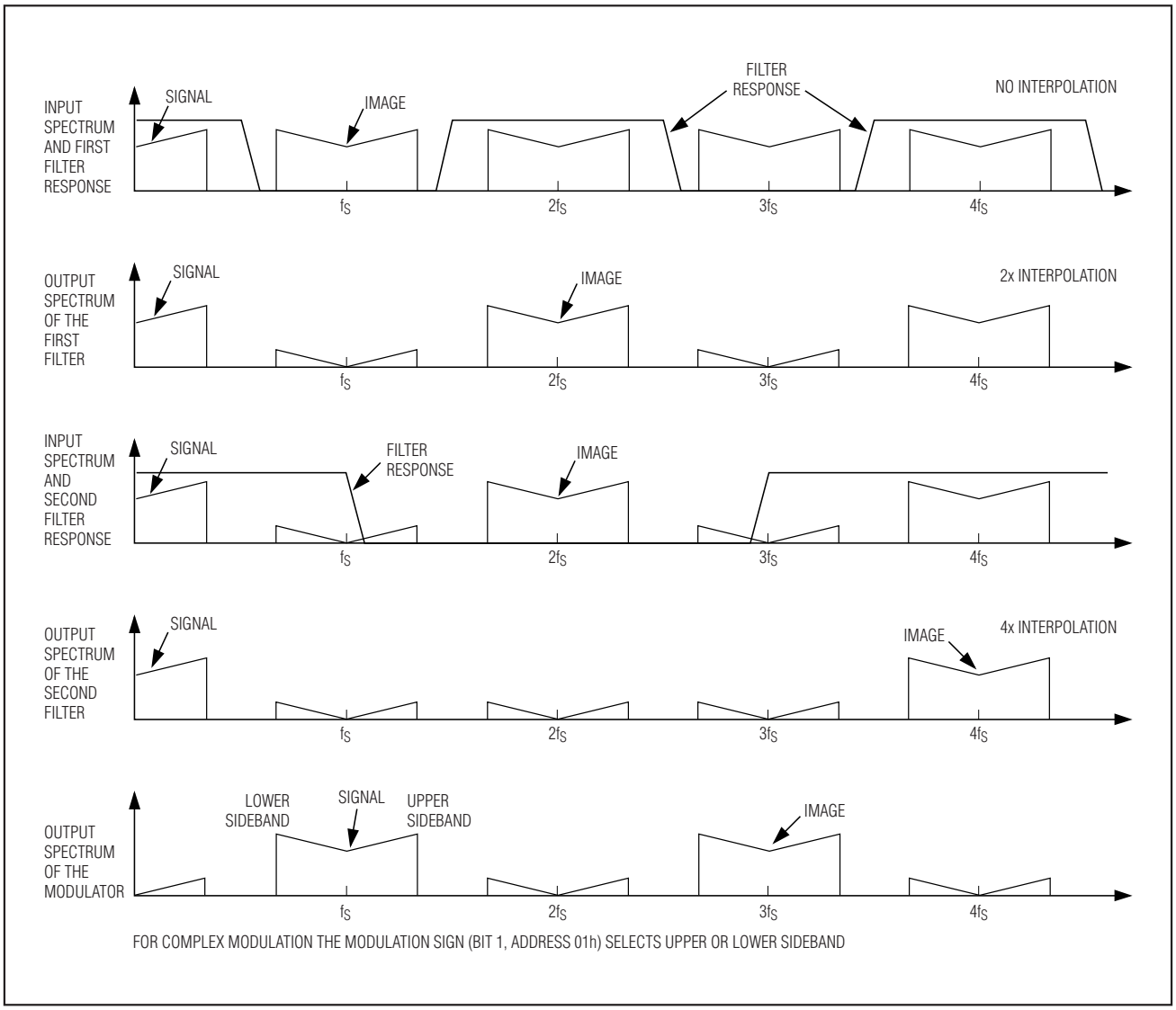

Figure 10. Spectral Representation of 4x Interpolation Filter with $f_{IM}/4$ Modulation (Output Frequencies are Relative to the Data Input Frequency, f_S)

12-Bit, 500Msps Interpolating and Modulating Dual DAC with CMOS Inputs

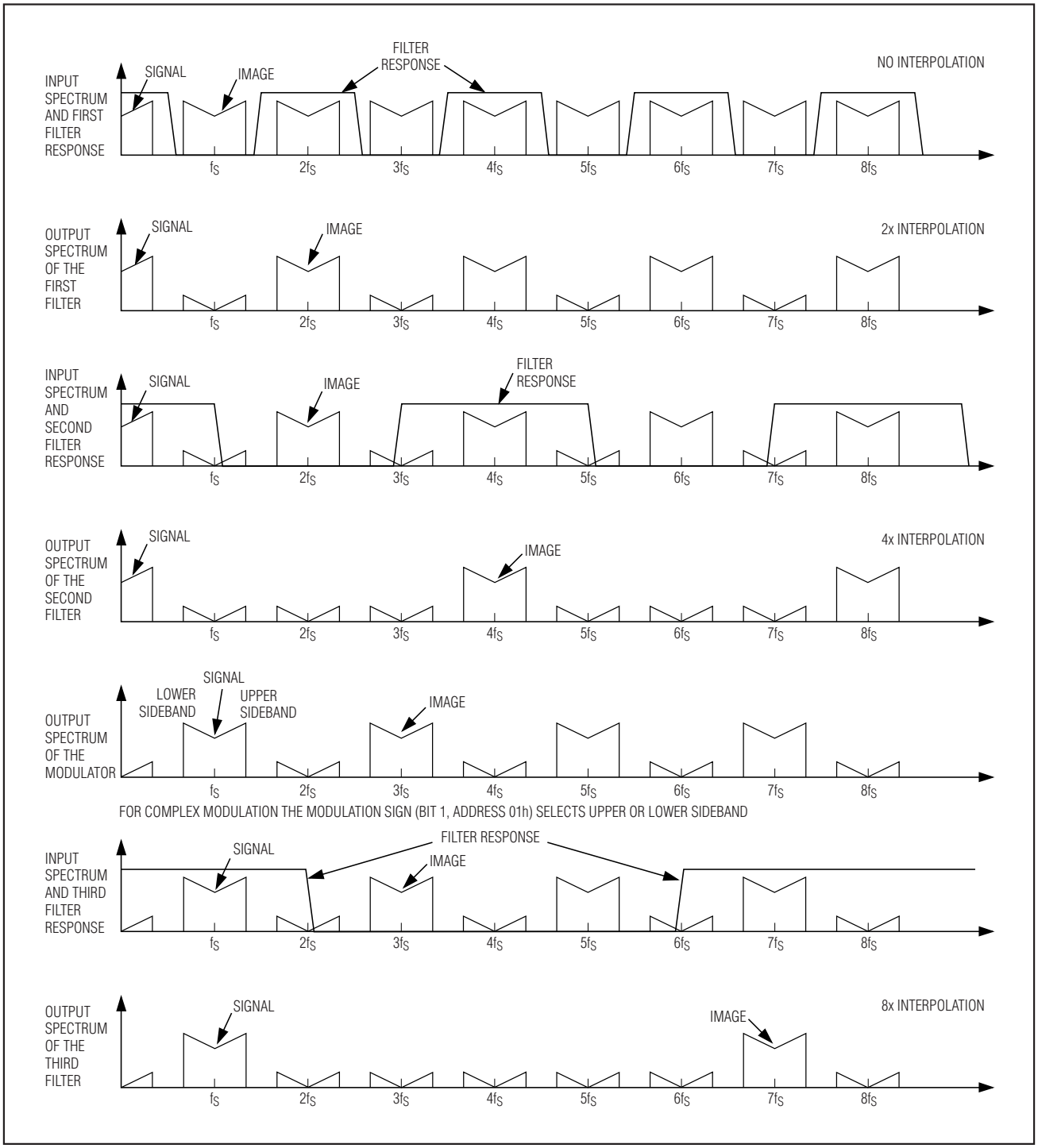

Figure 11. Spectral Representation of 8x Interpolation Filter with $f_{IM}/4$ Modulation and Lowpass Mode Enabled (Output Frequencies are Relative to the Data Input Frequency, f_S)

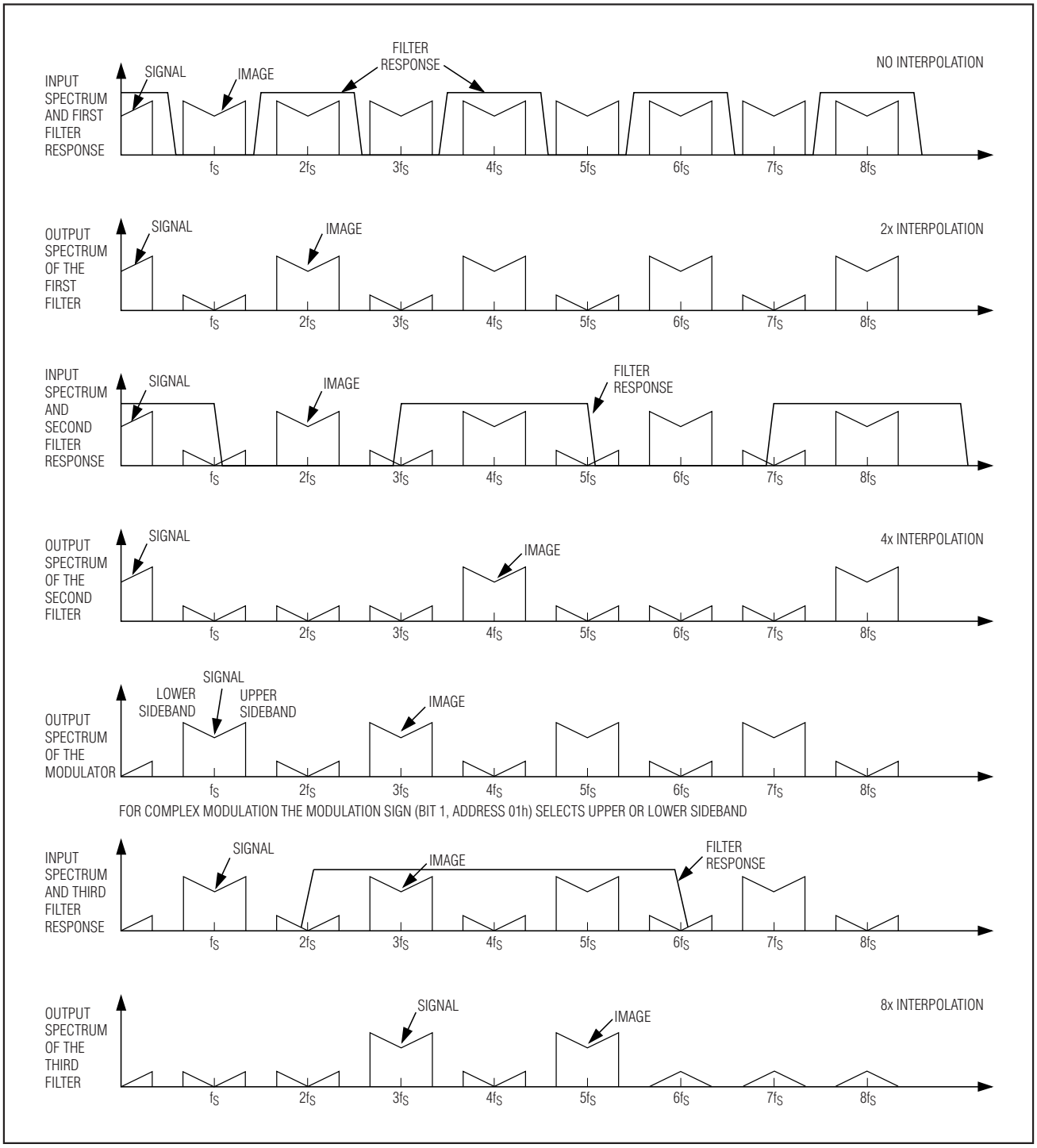

Figure 12. Spectral Representation of 8x Interpolation Filter with $f_{IM}/4$ Modulation and Highpass Mode Enabled (Output Frequencies are Relative to the Data Input Frequency, f_S)

12-Bit, 500Msps Interpolating and Modulating Dual DAC with CMOS Inputs

Digital Modulator

The MAX5893 features digital modulation at frequencies of $f_{IM}/2$ and $f_{IM}/4$, where f_{IM} is the data rate at the input to the modulator. f_{IM} equals f_{DAC} in 1x, 2x, and 4x interpolation modes. In 8x interpolation mode, f_{IM} equals $f_{DAC}/2$. The output rate of the modulator is always the same as the input data rate to the modulator, f_{IM}.

In complex modulation mode, data from the second interpolation filter is frequency mixed with the on-chip in-phase and quadrature (I/Q) local oscillator (LO). Complex modulation provides the benefit of image sideband rejection when combined with an external quadrature modulator commonly found in wireless communication systems.

In the $f_{LO} = f_{IM}/4$ mode, real or complex modulation can be used. The modulator multiplies successive input data samples by the sequence [1, 0, -1, 0] for a cos(ωt). The modulator modulates the input signal up to $f_{IM}/4$, creating upper and lower images around $f_{IM}/4$. The quadrature LO sin(ωt) is realized by delaying the cos(ωt) sequence by one clock cycle. Using complex modulation, complex IF is generated. The complex IF combined with an external quadrature modulator provides image rejection. The sign of the LO can be changed to allow the user to select whether the upper or the lower image should be rejected (bit 1 of register 01h).

When $f_{IM}/2$ is chosen as the LO frequency, the input signal is multiplied by [-1, 1] on both channels. This produces images around $f_{IM}/2$. The complex image-reject modulation mode is not available for this LO frequency.

The outputs of the modulator can be expressed as:

$$I(t) = A(t) \times \cos(\omega t) - B(t) \times \sin(\omega t)$$
$$Q(t) = A(t) \times \sin(\omega t) + B(t) \times \cos(\omega t)$$

in complex modulation, e^{+jwt}

$$I(t) = A(t) \times \cos(\omega t) + B(t) \times \sin(\omega t)$$
$$Q(t) = A(t) \times \sin(\omega t) + B(t) \times \cos(\omega t)$$

in complex modulation, e^{-jwt}

where $\omega = 2 \times \pi \times f_{LO}$.

For real modulation, the outputs of the modulator can be expressed as:

$$I(t) = A(t) \times \cos(\omega t)$$
$$Q(t) = A(t) \times \cos(\omega t)$$

If more than one MAX5893 is used, their LO phases can be synchronized by simultaneously releasing $\overline{RESET}$. This sets the MAX5893 to its predefined initial phase.

Device Reset

The MAX5893 can be reset by holding the $\overline{RESET}$ pin low for 10ns. This will program the control registers to their default values in Table 2. During power-on, $\overline{RESET}$ must be held low until all power supplies have stabilized. Alternatively, programming bit 5 of address 00h to a logic-high also resets the MAX5893 after power-up.

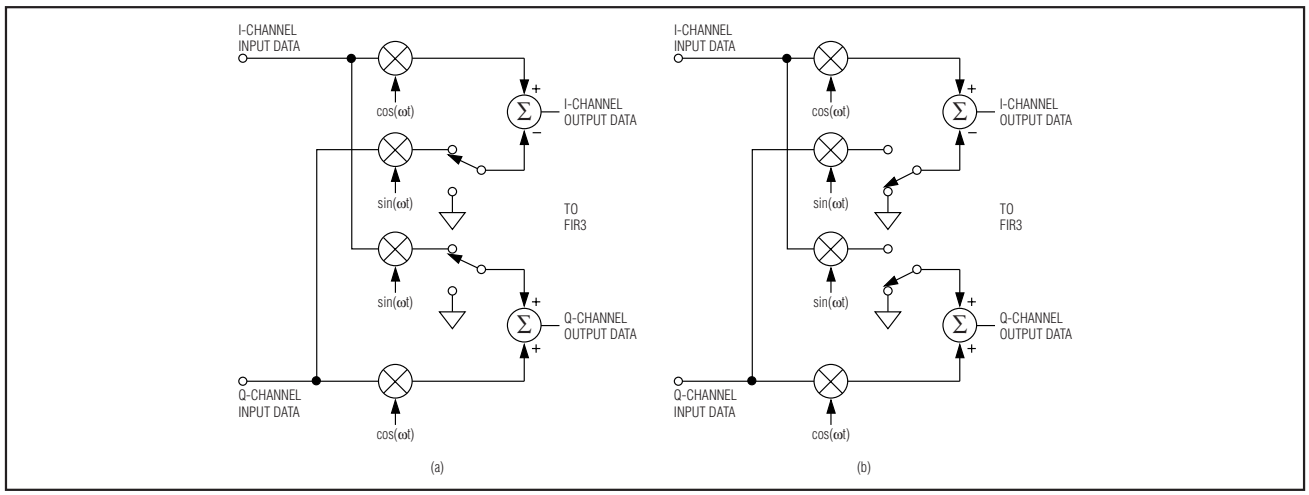

Figure 13. (a) Modulator in Complex Modulation Mode; (b) Modulator in Real Modulation Mode

Distributor of Maxim Integrated: Excellent Integrated System Limited
Datasheet of MAX5893EGK+D - IC DAC 12BIT DUAL 500MSPS 68-QFN
Contact us: sales@integrated-circuit.com Website: www.integrated-circuit.com

12-Bit, 500Msps Interpolating and Modulating Dual DAC with CMOS Inputs

Power-Down Mode

The MAX5893 features three power-saving modes. Each DAC can be individually powered down through bits 2 and 3 of address 00h. The interpolation filters can also be powered down through bit 4 of address 00h, preserving the output level of each DAC (the DACs remain powered). Powering down both DACs will automatically put the MAX5893 into full power-down, including the interpolation filters.

Applications Information

Frequency Planning

System designers need to take the DAC into account during frequency planning for high-performance applications. Proper frequency planning can ensure that optimal system performance is achieved. The MAX5893 is designed to deliver excellent dynamic performance across wide bandwidths, as required for communication systems. As with all DACs, some combinations of output frequency and update rate produce better performance than others.

Harmonics are often folded down into the band of interest. Specifically, if the DAC outputs a frequency close to f_S/N, the Mth harmonic of the output signal will be aliased down to:

$$f = f_S - M \times f_{OUT} = f_S \left[\frac{N-M}{N} \right]$$

Thus, if $N \approx (M + 1)$, the Mth harmonic will be close to the output frequency. SFDR performance of a current-steering DAC is often dominated by third-order harmonic distortion. If this is a concern, placing the output signal at a different frequency other than $f_S/4$ should be considered.

Common to interpolating DACs are images near the divided clocks. In a DAC configured for 4x interpolation this applies to images around $f_S/4$ and $f_S/2$. In a DAC configured for 8x interpolation this applies to images around $f_S/8$, $f_S/4$, and $f_S/2$. Most of these images are not part of the in-band (0 to $f_{DATA}/2$) SFDR specification, though they are a consideration for out-of-band ($f_{DATA}/2$ - $f_{DAC}/2$) SFDR and may depend on the relationship of the DATACLK to DAC update clock (see the *Data Clock* section). When specifying the output reconstruction filter for other than baseband signals, these images should not be ignored.

Data Clock

The MAX5893 features synchronizers that allow for arbitrary phase alignment between DATACLK and CLKP/CLKN. The DATACLK causes internal switching in the MAX5893 and the phase between DATACLK (input mode) to CLKP/CLKN will influence the images at DATACLK. Optimum image rejection is achieved when DATACLK transitions are aligned with the falling edge of CLKP. Figure 14 shows the image level near DATACLK as a function of the DATACLK (input mode) to CLKP/CLKN phase at 500Msps, 4x interpolation for a 10MHz, -6dBFS output signal.

Clock Interface

The MAX5893 features a flexible differential clock input (CLKP, CLKN) with a separate supply (AV_{CLK}) to achieve optimum jitter performance. It uses an ultra-low jitter clock to achieve the required noise density. Clock jitter must be less than $0.5ps_{RMS}$ to meet the specified noise density. For that reason, the CLKP/CLKN input source must be designed carefully. The differential clock (CLKN and CLKP) input can be driven from a single-ended or a differential clock source. Differential clock drive is required to achieve the best dynamic performance from the DAC. For single-ended operation, drive CLKP with a low noise source and bypass CLKN to GND with a 0.1µF capacitor.

The CLKP and CLKN pins are internally biased to $AV_{CLK}/2$. This allows the user to AC-couple clock

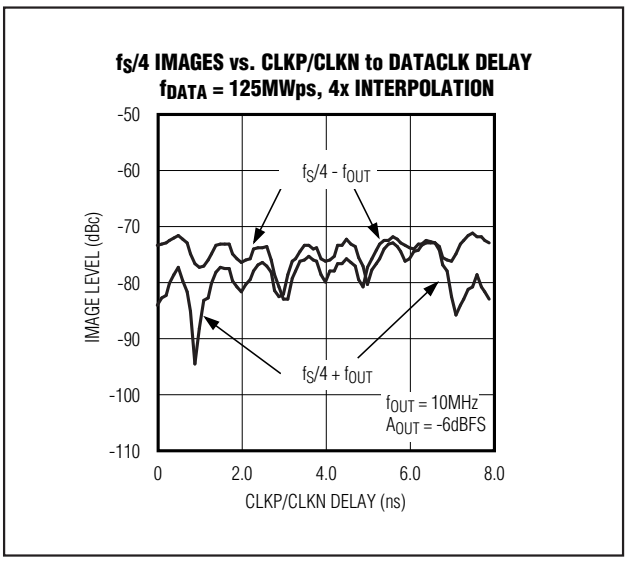

Figure 14. Effect of CLKP/CLKN to DATACLK Phase on $f_S/4$ Images

12-Bit, 500Msps Interpolating and Modulating Dual DAC with CMOS Inputs

sources directly to the device without external resistors to define the DC level. The input resistance of CLKP and CLKN is 5kΩ.

A convenient way to apply a differential signal is with a balun transformer as shown in Figure 15. Alternatively, these inputs may be driven from a CMOS-compatible clock source, however it is recommended to use sine-wave or AC-coupled differential ECL/PECL drive for best dynamic performance.

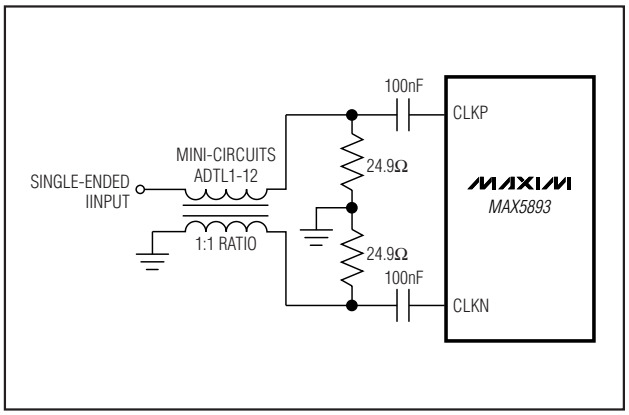

Figure 15. Single-Ended-to-Differential Clock Conversion Using a Balun Transformer

Output Interface (OUTI, OUTQ)

The MAX5893 outputs complementary currents (OUTIP, OUTIN) and (OUTQP, OUTQN), that can be utilized in a differential configuration. Load resistors convert these two output currents into a differential output voltage.

The differential output between OUTIP (OUTQP) and OUTIN (OUTQN) can be converted to a single-ended output using a transformer or a differential amplifier. Figure 16 shows a typical transformer-based application circuit for generation of IF output signals. In this configuration, the MAX5893 operates in differential mode, which reduces even-order harmonics, and increases the available output power. Pay close attention to the transformer core saturation characteristics when selecting a transformer. Transformer core saturation can introduce strong second harmonic distortion, especially at low output frequencies and high signal

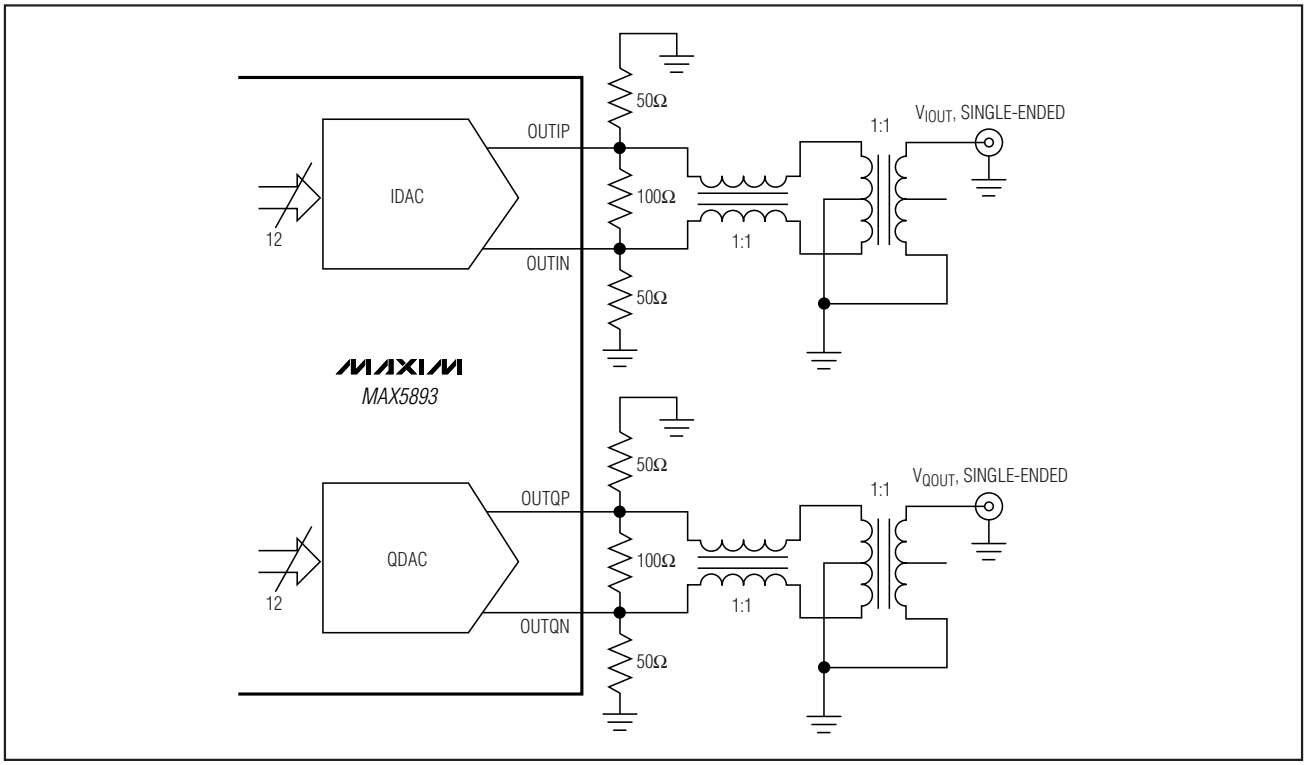

Figure 16. Differential-to-Single-Ended Conversion Using Wideband RF Transformers

amplitudes. It is recommended to connect the transformer center tap to ground.

If a transformer is not used, the outputs must have a resistive termination to ground. Figure 17 shows the MAX5893 output configured for differential DC-coupled mode. The DC-coupled configuration can be used to eliminate waveform distortion due to highpass filter effects. Applications include communication systems employing analog quadrature upconverters and requiring a high-speed DAC for baseband I/Q synthesis.

If a single-ended DC-coupled unipolar output is desirable, OUTIP (OUTQP) should be selected as the output, and connect OUTIN (OUTQN) to ground. Using the MAX5893 output single-ended is not recommended because it introduces additional noise and distortion.

The distortion performance of the DAC also depends on the load impedance. The MAX5893 is optimized for a 50Ω double termination. It can be used with a transformer output as shown in Figure 16 or just one 25Ω resistor from each output to ground and one 50Ω resistor between the outputs (Figure 17). Higher output termination resistors may be used, as long as each output voltage does not exceed +1V with respect to GND, but at the cost of degraded distortion performance and increased output noise voltage.

Reference Input/Output

The MAX5893 supports operation with the on-chip 1.2V bandgap reference or an external reference voltage source. REFIO serves as the input for an external, low-impedance reference source, and as the output if the DAC is operating with the internal reference.

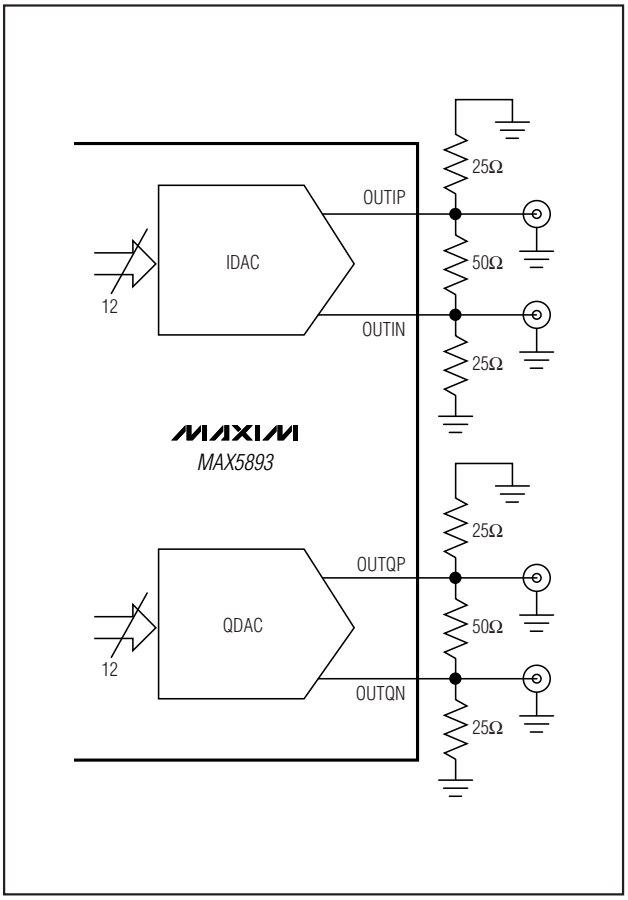

Figure 17. The DC-Coupled Differential Output Configuration

12-Bit, 500Msps Interpolating and Modulating Dual DAC with CMOS Inputs

For stable operation with the internal reference, REFIO should be decoupled to GND with a 1µF capacitor. REFIO must be buffered with an external amplifier, if heavy loading is required, due to its 10kΩ output resistance.

Alternatively, apply a temperature-stable external reference to REFIO (Figure 18). The internal reference is overdriven by the external reference. For improved accuracy and drift performance, choose a fixed output voltage reference such as the MAX6520 bandgap reference.

The MAX5893's reference circuit (Figure 19) employs a control amplifier, designed to regulate the full-scale current I_{OUT} for the differential current outputs of the DAC. The output current can be calculated as:

$$I_{OUTFS} = 32 \times I_{REFIO} - 1LSB$$

$$I_{OUTFS} = 32 \times I_{REFIO} - (I_{OUT}/2^{12})$$

where I_{REFIO} is the reference output current ($I_{REFIO} = V_{REFIO}/R_{SET}$) and I_{OUT} is the full-scale output current of the DAC. Located between FSADJ and DACREF, R_{SET} is the reference resistor, which determines the amplifier's output current for the DAC. Use Table 5 for a matrix of different I_{OUTFS} and R_{SET} selections.

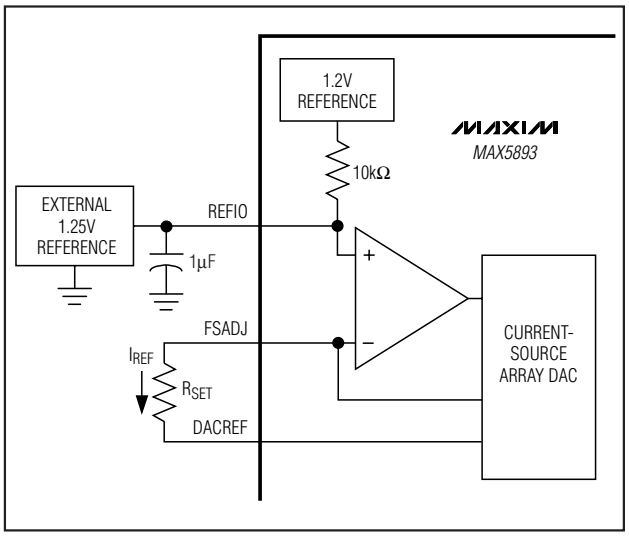

Figure 18. Typical External Reference Circuit

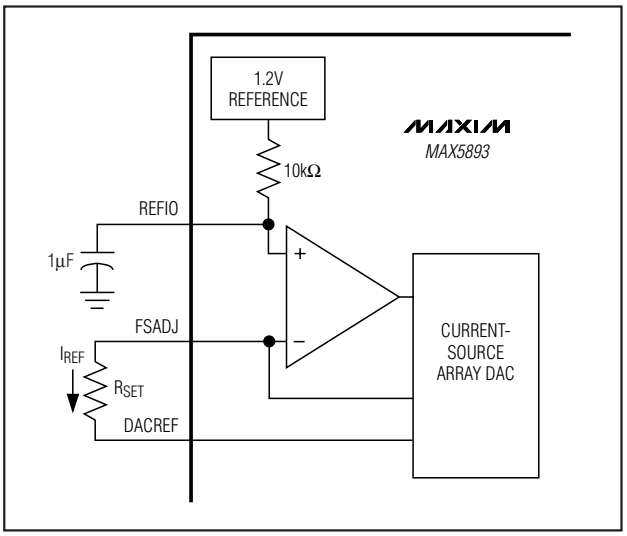

Figure 19. MAX5893 Internal Reference Architecture

Table 5. I_{OUTFS} and R_{SET} Selection Matrix Based on a Typical 1.20V Reference Voltage

FULL-SCALE CURRENT	REFERENCE CURRENT	R_{SET} (Ω)		OUTPUT VOLTAGE
I_{OUTFS} (mA)	I_{REF} (µA)	CALCULATED	1% EIA STD	$V_{IOUTP/N}$* (mV_{P-P})
2	62.50	19.2k	19.1k	100
5	156.26	7.68k	7.5k	250
10	312.50	3.84k	3.83k	500
15	468.75	2.56k	2.55k	750
20	625.00	1.92k	1.91k	1000

**Terminated into a 50Ω load.*

Distributor of Maxim Integrated: Excellent Integrated System Limited
Datasheet of MAX5893EGK+D - IC DAC 12BIT DUAL 500MSPS 68-QFN
Contact us: sales@integrated-circuit.com Website: www.integrated-circuit.com

Power Supplies, Bypassing, Decoupling, and Layout

Grounding and power-supply decoupling strongly influence the MAX5893 performance. Unwanted digital crosstalk can couple through the input, reference, power-supply, and ground connections, which can affect dynamic specifications like signal-to-noise ratio or spurious-free dynamic range. In addition, electromagnetic interference (EMI) can either couple into or be generated by the MAX5893. Observe the grounding and power-supply decoupling guidelines for high-speed, high-frequency applications. Follow the power-supply and filter configuration guidelines to achieve optimum dynamic performance.

Using a multilayer PCB with separate ground and power-supply planes, run high-speed signals on lines directly above the ground plane. Since the MAX5893 has separate analog and digital sections, the PCB should include separate analog and digital ground sections with only one point connecting the three planes at the exposed pad under the MAX5893. Run digital signals above the digital ground plane and analog/clock signals above the analog/clock ground plane. Keep digital signals as far away from sensitive analog inputs, reference lines, and clock inputs as practical. Use a symmetric design of clock input and the analog output lines to minimize 2nd-order harmonic distortion components, thus optimizing the dynamic performance of the DAC. Keep digital signal paths short and run lengths matched to avoid propagation delay and data skew mismatches.

The MAX5893 requires five separate power-supply inputs for the analog ($AV_{DD1.8}$ and $AV_{DD3.3}$), digital ($DV_{DD1.8}$ and $DV_{DD3.3}$), and clock (AV_{CLK}) circuitry. Decouple each voltage supply pin with a separate 0.1µF capacitor as close to the device as possible and with the shortest possible connection to the appropriate ground plane. Minimize the analog and digital load capacitances for optimized operation. Decouple all power-supply voltages at the point they enter the PCB with tantalum or electrolytic capacitors. Ferrite beads with additional decoupling capacitors forming a pi-network could also improve performance.

The exposed pad (EP) MUST be soldered to the ground. Use multiple vias, an array of at least 4 x 4 vias, directly under the EP to provide a low thermal and electrical impedance path for the IC.

Static Performance Parameter Definitions

Integral Nonlinearity (INL)

Integral nonlinearity is the deviation of the values on an actual transfer function from either a best straight-line fit (closest approximation to the actual transfer curve) or a line drawn between the end points of the transfer function, once offset and gain errors have been nullified. For a DAC, the deviations are measured at every individual step.

Differential Nonlinearity (DNL)

Differential nonlinearity is the difference between an actual step height and the ideal value of 1 LSB. A DNL error specification of less than 1 LSB guarantees no missing codes and a monotonic transfer function.

Offset Error

The offset error is the difference between the ideal and the actual offset current. For a DAC, the offset point is the average value at the output for the two midscale digital input codes with respect to the full-scale of the DAC. This error affects all codes by the same amount.

Gain Error

A gain error is the difference between the ideal and the actual full-scale output voltage on the transfer curve, after nullifying the offset error. This error alters the slope of the transfer function and corresponds to the same percentage error in each step.

Dynamic Performance Parameter Definitions

Settling Time

The settling time is the amount of time required from the start of a transition until the DAC output settles its new output value to within the specified accuracy.

Noise Spectral Density

The DAC output noise is the sum of the quantization noise and thermal noise. Noise spectral density is the noise power in 1Hz bandwidth, specified in dBFS/Hz.

Signal-to-Noise Ratio (SNR)

For a waveform perfectly reconstructed from digital samples, the theoretical maximum SNR is the ratio of the full-scale analog output (RMS value) to the RMS quantization error (residual error). The ideal, theoretical maximum SNR can be derived from the DAC's resolution (N bits):

$$SNR_{dB} = 6.02_{dB} \times N + 1.76_{dB}$$

12-Bit, 500Msps Interpolating and Modulating Dual DAC with CMOS Inputs

However, noise sources such as thermal noise, reference noise, clock jitter, etc. affect the ideal reading. Therefore, SNR is computed by taking the ratio of the RMS signal to the RMS noise, which includes all spectral components minus the fundamental, the first four harmonics, and the DC offset.

Spurious-Free Dynamic Range (SFDR)

SFDR is the ratio of the RMS amplitude of the carrier frequency (maximum signal components) to the RMS value of their next largest distortion component. SFDR is usually measured in dBc and with respect to the carrier frequency amplitude or in dBFS with respect to the DAC's full-scale range. Depending on its test condition, SFDR is observed within a predefined window or to Nyquist.

Two-/Four-Tone Intermodulation Distortion (IMD)

The two-tone IMD is the ratio expressed in dBc (or dBFS) of the worst 3rd-order (or higher) IMD products to either output tone.

Adjacent Channel Leakage Power Ratio (ACLR)

Commonly used in combination with WCDMA (wideband code-division multiple-access), ACLR reflects the leakage power ratio in dB between the measured powers within a channel relative to its adjacent channel. ACLR provides a quantifiable method of determining out-of-band spectral energy and its influence on an adjacent channel when a bandwidth-limited RF signal passes through a nonlinear device.

12-Bit, 500Msps Interpolating and Modulating Dual DAC with CMOS Inputs

Pin Configuration

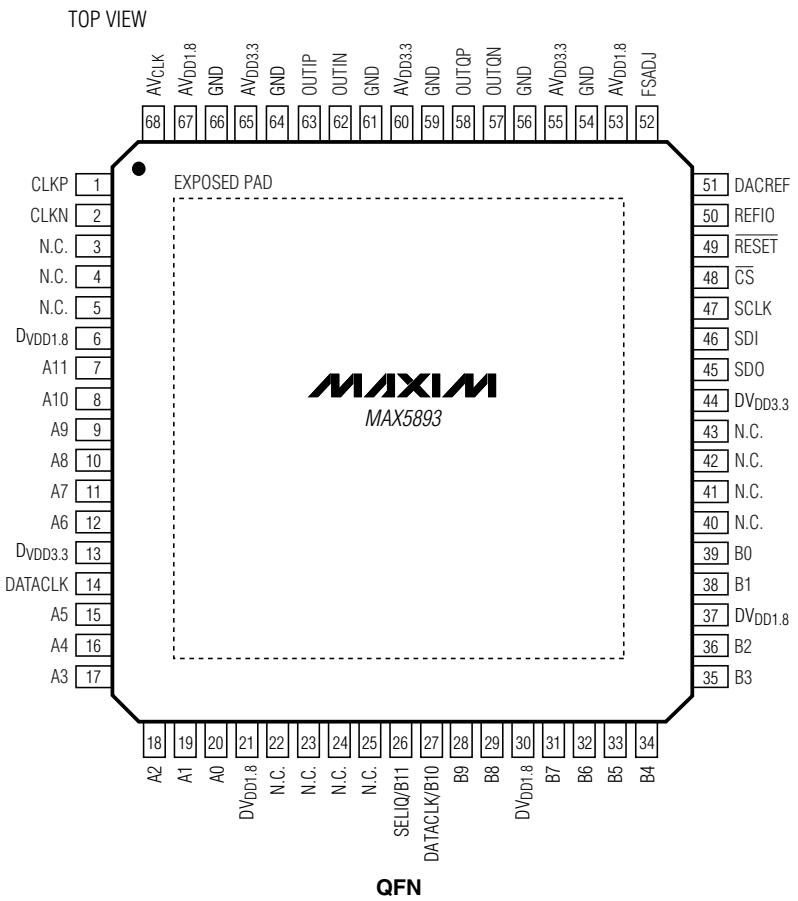

Package Information

For the latest package outline information and land patterns, go to **www.maxim-ic.com/packages**.

PACKAGE TYPE	PACKAGE CODE	DOCUMENT NO.
68 QFN-EP	G6800-4	21-0122

Distributor of Maxim Integrated: Excellent Integrated System Limited
Datasheet of MAX5893EGK+D - IC DAC 12BIT DUAL 500MSPS 68-QFN
Contact us: sales@integrated-circuit.com Website: www.integrated-circuit.com

12-Bit, 500Msps Interpolating and Modulating Dual DAC with CMOS Inputs

Revision History

REVISION NUMBER	REVISION DATE	DESCRIPTION	PAGES CHANGED
0	—	Initial release	—
1	4/07	—	—
2	10/08	Add note to setup and hold specifications.	5, 6

Maxim cannot assume responsibility for use of any circuitry other than circuitry entirely embodied in a Maxim product. No circuit patent licenses are implied. Maxim reserves the right to change the circuitry and specifications without notice at any time.

© 2008 Maxim Integrated Products MAXIM is a registered trademark of Maxim Integrated Products, Inc.