Excellent Integrated System Limited

Stocking Distributor

Click to view price, real time Inventory, Delivery & Lifecycle Information:

E-Switch
300DP3R7BLKM1REBLK

For any questions, you can email us directly:
sales@integrated-circuit.com

SHEET OF

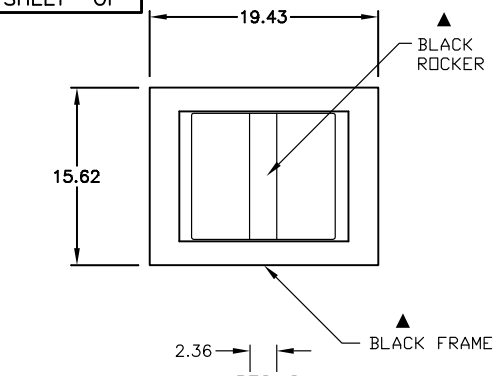

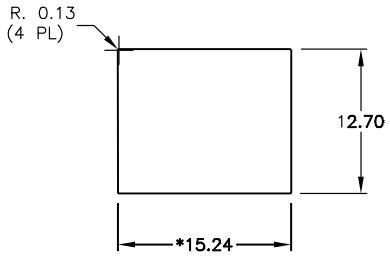

RECOMMENDED PANEL MOUNTING

PANEL THICKNESS

1.52 TO 3.18

▲ * DIMENSION IS 15.75/15.88 FOR PANEL THICKNESS BETWEEN 1.52mm TO 3.18mm

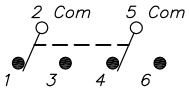

CIRCUIT: DPDT

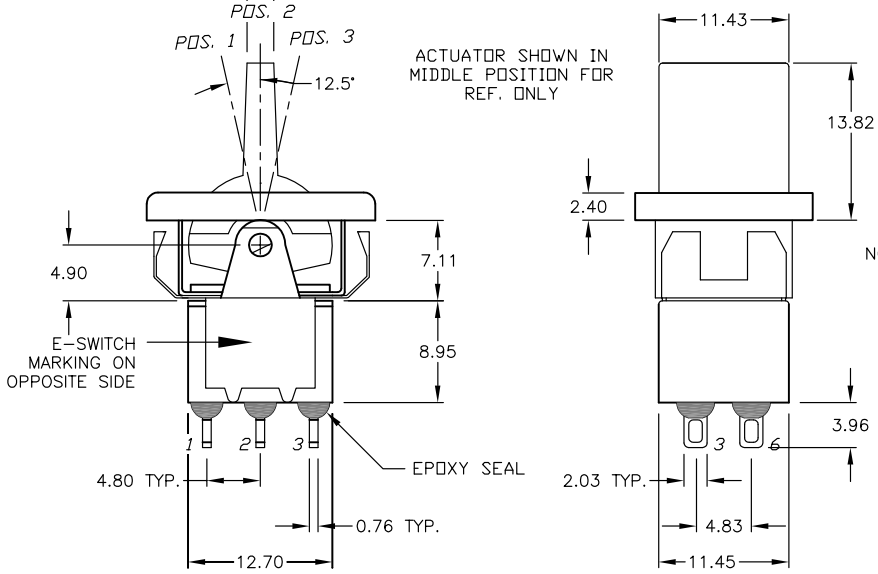

▲

SWITCH FUNCTION		
POS. 1	POS. 2	POS. 3
ON	OFF	ON
2-3,5-6	OPEN	2-1,5-4

NOTES:

1. ALL DIMENSIONS IN MM
2. GENERAL TOLERANCE: X.X=±0.4
   X.XX=±0.25
3. TERM. NOS. FOR REF. ONLY
4. RATING: 0.4 VOLT AMPS MAX @20V MAX AC OR DC
5. ▲ MATERIAL: FIXED TERMINAL & MOVING CONTACT
   COPPER ALLOY W/GOLD PLATE OVER NICKLE PLATE
6. CONTACT RESISTANCE: 10MILLI OHMS MAX INITIAL
   @2-4VDC, 100mA for AG & AU
7. ELECTRICAL LIFE: 50,000 MAKE-AND-BREAK
   CYCLES AT FULL LOAD.
8. INSULATION RESISTANCE: 1,000M OHM MIN.
9. DIELECTRIC STRENGTH: 1000V RMS @SEA LEVEL
10. OPERATING TEMP.: -30°C to 85°C
11. ▲ DENOTES CRITICAL PARAMETER.

REV.	ECN No.	DESCRIPTION	DATE	CHKD
A	13620	RELEASED FOR PRODUCTION	11/24/03	AR

THE INFORMATION CONTAINED IN THIS DOCUMENT IS PROPRIETARY TO E-SWITCH AND IS NOT TO BE COPIED OR TRANSFERRED

E-SWITCH®

TITLE				
300DP3R7BLKM1REBLK				
SCALE 2:1	DATE 11/24/03	DR AR	DWG T323004	REV A