Excellent Integrated System Limited

Stocking Distributor

Click to view price, real time Inventory, Delivery & Lifecycle Information:

E-Switch
KO130VA126

For any questions, you can email us directly:
sales@integrated-circuit.com

Distributor of E-Switch: Excellent Integrated System Limited
Datasheet of KO130VA126 - SWITCH KEYLOCK SP4T 4A 45/90DEG
Contact us: sales@integrated-circuit.com Website: www.integrated-circuit.com

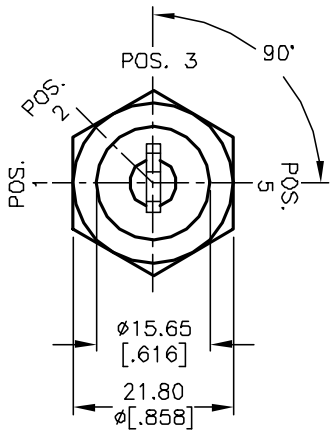

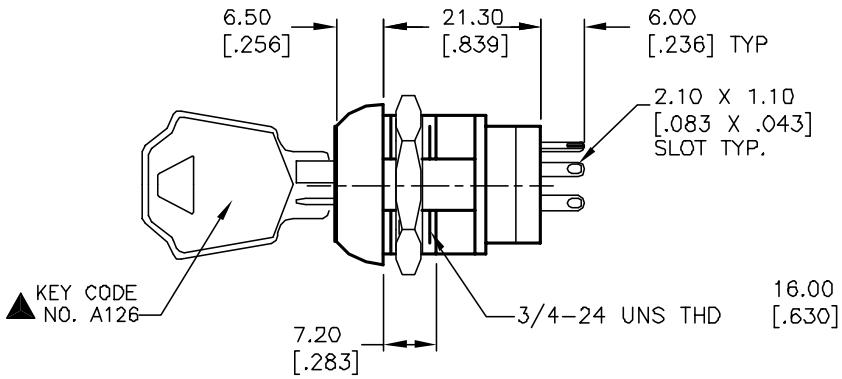

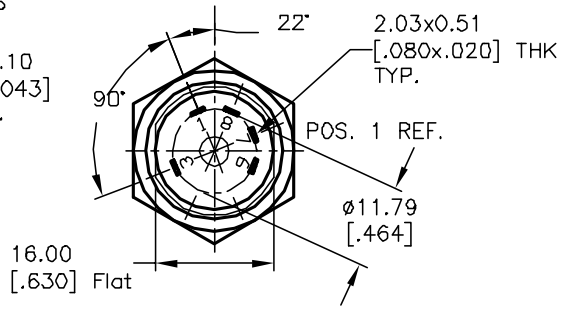

NOTES:

1. ALL DIMENSIONS IN MM [INCH]
2. GENERAL TOLERANCE: X.X=±0.4
   X.XX=±0.25
3. TERM. NOS. FOR REF. ONLY
4. CONTACT RATING: 4A @125VAC/28VDC, 2A @250VAC
5. DIELECTRIC STRENGTH: 1KV RMS min. at sea level
6. ELECTRICAL LIFE: 10,000 make-and-break cycles at full load.
7. MATERIALS:
   CONTACTS: Silver Plated CU (Q Contact material)
   TERMINALS: GOLD Plated Cu (Q Contact material)
   MOUNTING NUT: Nickel Plated zinc alloy
   CONTACT SPRING: Piano Wire
   KEYS (2): Brass with code no. A126
   LOCK: Bright NI plated zinc alloy with NI facing
   TUMBLER Mechanism: 4-disc tumbler cylinder.

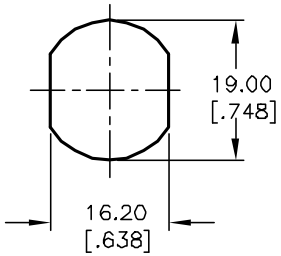

RECOMMENDED PANEL LAYOUT

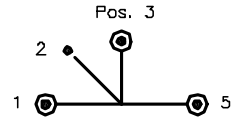

CIRCUIT: SP (45°/45°/90° INDEXING)
CONTACT CONFIGURATION

SWITCH FUNCTION				
CONNECTED TERMINAL #				
POS. 1	POS. 2	POS. 3	POS. 4	POS. 5
6-7	7-8	8-1	NONE	1-3

LEGEND
● =Detent Positions (45° or 90°)
◉ =Key pull possible in these positions

REV.	ECN No.	DESCRIPTION	DATE	CHKD
A	13055	RELEASED FOR PRODUCTION	4/17/03	AR

THE INFORMATION CONTAINED IN THIS DOCUMENT IS PROPRIETARY TO E-SWITCH AND IS NOT TO BE COPIED OR TRANSFERRED

E-SWITCH®

TITLE				
KO130V-A126				
SCALE 1:1	DATE 4/17/03	DR AR	DWG K200231	REV A