Excellent Integrated System Limited

Stocking Distributor

Click to view price, real time Inventory, Delivery & Lifecycle Information:

US Sensor
USP8528

For any questions, you can email us directly:
sales@integrated-circuit.com

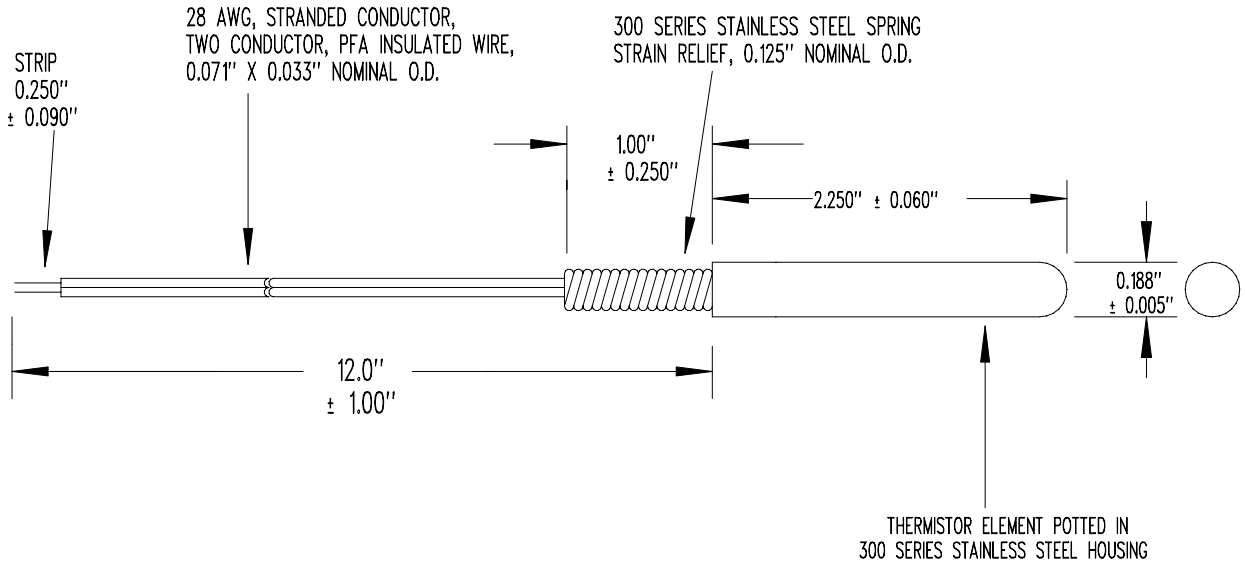

RESISTANCE @ +25°C = 10,000 Ω NOMINAL
ACCURACY (+25 TO +80°C) = ± 0.20°C
RESISTANCE/TEMPERATURE CURVE = "J"
BETA "β" (0 TO +50°C) = 3,892°K NOMINAL
TEMPERATURE COEFFICIENT @ +25°C = −4.4%/°C NOMINAL
MAXIMUM TEMPERATURE RATING = +125°C

SEE MANUFACTURING SPECIFICATION (LAYER 1)

REV	REVISION RECORD	DATE	APP
NONE	RELEASE TO PRODUCTION	01/25/08	DD

SCALE	NONE
DRAWN BY	DAN DANKERT
DATE	01/25/08
REV.	NONE
LAYER	0 OF 2

U.S. SENSOR CORP.
1832 W. COLLINS AVE.
ORANGE, CA. 92867
714-639-1000 www.ussensor.com

NTC THERMISTOR PROBE

P/N USP8528