Distributor of Integrated Device Technology (IDT): Excellent Integrated System Limited
Datasheet of ICS853001AGLF - IC CLK BUFFER 1:1 2.5GHZ 8TSSOP
Contact us: sales@integrated-circuit.com Website: www.integrated-circuit.com

Excellent Integrated System Limited

Stocking Distributor

Click to view price, real time Inventory, Delivery & Lifecycle Information:

Integrated Device Technology (IDT)
ICS853001AGLF

For any questions, you can email us directly:
sales@integrated-circuit.com

Distributor of Integrated Device Technology (IDT): Excellent Integrated System Limited
Datasheet of ICS853001AGLF - IC CLK BUFFER 1:1 2.5GHZ 8TSSOP
Contact us: sales@integrated-circuit.com Website: www.integrated-circuit.com

ICS853001

1:1, Differential LVPECL-to-2.5V, 3.3V, 5V LVPECL/ECL Buffer

General Description

The ICS853001 is a 1:1 Differential LVPECL-to-LVPECL Buffer and a member of the HiPerClockS™family of High Performance Clock Solutions from IDT. The ICS853001 may be used to regenerate LVPECL clocks which may have been attenuated, across a long trace, or may also be used as a differential-to-LVPECL translator. The differential input can accept the following differential input types: LVPECL, LVDS and CML. The device also has an output enable pin for debug/test purposes. When the output is disabled, it drives differential LOW (Q = LOW, nQ = HIGH). The ICS853001 is packaged in either a 3mm x 3mm 8-pin TSSOP or 3.9mm x 4.9mm 8-pin SOIC, making it ideal for use on space-constrained boards.

Features

- 1:1 Differential LVPECL-to-LVPECL / ECL buffer
- One LVPECL clock output pair
- One Differential LVPECL PCLK, nPCLK input pair
- PCLK, nPCLK pair can accept the following differential input levels: LVPECL, LVDS, CML
- Maximum output frequency: >2.5GHz
- Part-to-part skew: 100ps (maximum)
- Propagation delay: 500ps (maximum)
- Additive phase jitter, RMS: 0.03ps (typical)
- LVPECL mode operating voltage supply range: V_{CC} = 2.375V to 5.25V, V_{EE} = 0V
- ECL mode operating voltage supply range: V_{CC} = 0V, V_{EE} = -5.25V to -2.375V
- -40°C to 85°C ambient operating temperature
- Available in both standard (RoHS5) and lead-free (RoHS 6) packages

Block Diagram

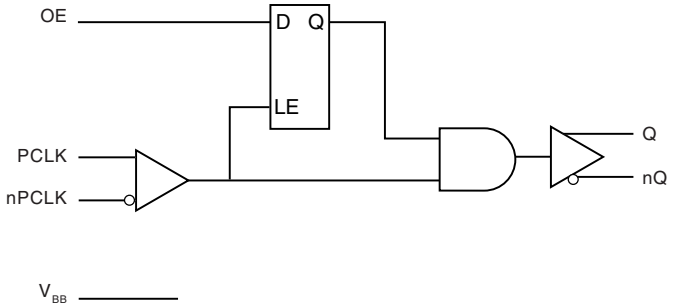

Pin Assignment

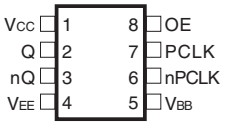

ICS853001
8-Lead TSSOP, 118 mil
3mm x 3mm x 0.95mm package body
G Package
Top View

ICS853001
8-Lead SOIC
3.90mm x 4.90mm x 1.37mm package body
M Package
Top View

TABLE 1. PIN DESCRIPTIONS

Number	Name	Type		Description
1	V_{CC}	Power		Positive supply pin.
2, 3	Q, nQ	Output		Differential output pair. LVPECL interface levels.
4	V_{EE}	Power		Negative supply pin.
5	V_{BB}	Output		Nominal bias voltage at V_{CC} - 1.38V.
6	nPCLK	Input	Pullup/ Pulldown	Inverting differential LVPECL clock input. V_{CC}/2 default when left floating. Can accept LVPECL, LVDS, CML interface levels.
7	PCLK	Input	Pulldown	Non-inverting differential LVPECL clock input. Can accept LVPECL, LVDS, CML interface levels.
8	OE	Input	Pullup	Active HIGH output enable. When logic HIGH, the output is enabled and follows the input clock. When logic LOW, the output drives logic low (Q=LOW, nQ=HIGH). LVCMOS/LVTTL interface levels.

NOTE: *Pullup and Pulldown* refer to internal input resistors. See Table 2, Pin Characteristics, for typical values.

TABLE 2. PIN CHARACTERISTICS

Symbol	Parameter	Test Conditions	Minimum	Typical	Maximum	Units
$R_{PULLDOWN}$	Input Pulldown Resistor			37.5		KΩ
R_{PULLUP}	Input Pullup Resistor			37.5		KΩ

ABSOLUTE MAXIMUM RATINGS

Supply Voltage, V_{CC}	6V (LVPECL mode, V_{EE} = 0)
Negative Supply Voltage, V_{EE}	-6V (ECL mode, V_{CC} = 0)
Inputs, V_I (LVPECL mode)	-0.5V to V_{CC} + 0.5 V
Inputs, V_I (ECL mode)	0.5V to V_{EE} - 0.5V
Outputs, I_O	
Continuous Current	50mA
Surge Current	100mA
V_{BB} Sink/Source, I_{BB}	± 0.5mA
Operating Temperature Range, TA	-40°C to +85°C
Storage Temperature, T_{STG}	-65°C to 150°C
Package Thermal Impedance, θ_{JA}	
8 Lead TSSOP	101.7°C/W (0 m/s)
8 Lead SOIC	112.7°C/W (0 lfpm)
(Junction-to-Ambient)	

NOTE: Stresses beyond those listed under Absolute Maximum Ratings may cause permanent damage to the device. These ratings are stress specifications only. Functional operation of product at these conditions or any conditions beyond those listed in the *DC Characteristics* or *AC Characteristics* is not implied. Exposure to absolute maximum rating conditions for extended periods may affect product reliability.

TABLE 3A. POWER SUPPLY DC CHARACTERISTICS, V_{CC} = 2.375V TO 5.25V; V_{EE} = 0V, TA = -40°C TO 85°C

Symbol	Parameter	Test Conditions	Minimum	Typical	Maximum	Units
V_{CC}	Positive Supply Voltage		2.375	3.3	5.25	V
I_{EE}	Power Supply Current				27	mA

TABLE 3B. LVCMOS DC CHARACTERISTICS, V_{CC} = 2.375V TO 5.25V; V_{EE} = 0V, TA = -40°C TO 85°C

Symbol	Parameter		Test Conditions	Minimum	Typical	Maximum	Units
V_{IH}	Input High Voltage	OE		$0.7V_{CC}$		V_{CC} + 0.3	V
V_{IL}	Input Low Voltage	OE		-0.3		$0.3V_{CC}$	V
I_{IH}	Input High Current	OE	$V_{CC} = V_{IN}$			150	µA
I_{IL}	Input Low Current	OE	$V_{CC} = V_{IN}$	-150			µA

TABLE 3C. LVCMOS DC CHARACTERISTICS, V_{CC} = 0V; V_{EE} = -5.25V TO -2.375V, TA = -40°C TO 85°C

Symbol	Parameter		Test Conditions	Minimum	Typical	Maximum	Units
V_{IH}	Input High Voltage	OE		$0.3V_{EE}$		0.3	V
V_{IL}	Input Low Voltage	OE		V_{EE} - 0.3		$0.7V_{EE}$	V
I_{IH}	Input High Current	OE	$V_{CC} = V_{IN}$			150	µA
I_{IL}	Input Low Current	OE	$V_{CC} = V_{IN}$	-150			µA

TABLE 3D. LVPECL DC CHARACTERISTICS, V_{CC} = 2.375V TO 5.25V; V_{EE} = 0V, TA = -40°C TO 85°C

Symbol	Parameter		Test Conditions	Minimum	Typical	Maximum	Units
I_{IH}	Input High Current	PCLK	$V_{CC} = V_{IN}$			200	µA
		nPCLK	$V_{CC} = V_{IN}$			200	µA
I_{IL}	Input Low Current	PCLK	V_{CC} = 5.25, V_{IN} = 0V	-200			µA
		nPCLK	V_{CC} = 5.25V, V_{IN} = 0V	-200			µA
V_{PP}	Peak-to-Peak Input Voltage			0.15		1.2	V
V_{CMR}	Common Mode Input Voltage; NOTE 1, 2			1.2		V_{CC}	V
V_{OH}	Output High Voltage; NOTE 3				V_{CC} - 1.005		V
V_{OL}	Output Low Voltage; NOTE 3				V_{CC} - 1.78		V
V_{SWING}	Peak-to-Peak Output Voltage Swing			0.6		1.0	V
V_{BB}	Bias Voltage			V_{CC} - 1.44	V_{CC} - 1.38	V_{CC} - 1.32	V

NOTE 1: Common mode voltage is defined as V_{IH}.
NOTE 2: For single ended applications, the maximum input voltage for PCLK, nPCLK is V_{CC} + 0.3V.
NOTE 3: Outputs terminated with 50Ω to V_{CC} - 2V.

TABLE 4. AC CHARACTERISTICS, V_{CC} = 0V; V_{EE} = -5.25V TO -2.375V OR V_{CC} = 2.375 TO 5.25V; V_{EE} = 0V, TA = -40°C TO 85°C

Symbol	Parameter		Test Conditions	Minimum	Typical	Maximum	Units
f_{MAX}	Output Frequency					>2.5	GHz
t_{PD}	Propagation Delay; NOTE 1			250		500	ps
*t*sk(pp)	Part-to-Part Skew; NOTE 2, 3					100	ps
*t*jit	Buffer Additive Phase Jitter, RMS; refer to Additive Phase Jitter Section		155.52MHz, Integration Range: 12KHz - 20MHz		0.03		ps
t_R / t_F	Output Rise/Fall Time		20% to 80%	50		250	ps
odc	Output Duty Cycle	*f* ≤ 1GHz	V_{CC} = 2.375V to 3.6V, V_{EE} = 0	48		52	%
			V_{CC} > 3.6V to 5.25V, V_{EE} = 0 or V_{EE} = -5.25V to -3.6V, V_{CC} = 0	46		54	%

NOTE: Electrical parameters are guaranteed over the specified ambient operating temperature range, which is established when the device is mounted in a test socket with maintained transverse airflow greater than 500 lfpm. The device will meet specifications after thermal equilibrium has been reached under these conditions.
All parameters are measured at *f* ≤ 1.7GHz, unless otherwise noted.
NOTE 1: Measured from the differential input crossing point to the differential output crossing point.
NOTE 2: Defined as skew between outputs on different devices operating at the same supply voltages and with equal load conditions. Using the same type of inputs on each device, the outputs are measured at the differential cross points.
NOTE 3: This parameter is defined in accordance with JEDEC Standard 65.

ADDITIVE PHASE JITTER

The spectral purity in a band at a specific offset from the fundamental compared to the power of the fundamental is called the ***dBc Phase Noise.*** This value is normally expressed using a Phase noise plot and is most often the specified plot in many applications. Phase noise is defined as the ratio of the noise power present in a 1Hz band at a specified offset from the fundamental frequency to the power value of the fundamental. This ratio is expressed in decibels (dBm) or a ratio of the power in the 1Hz band to the power in the fundamental. When the required offset is specified, the phase noise is called a ***dBc*** value, which simply means dBm at a specified offset from the fundamental. By investigating jitter in the frequency domain, we get a better understanding of its effects on the desired application over the entire time record of the signal. It is mathematically possible to calculate an expected bit error rate given a phase noise plot.

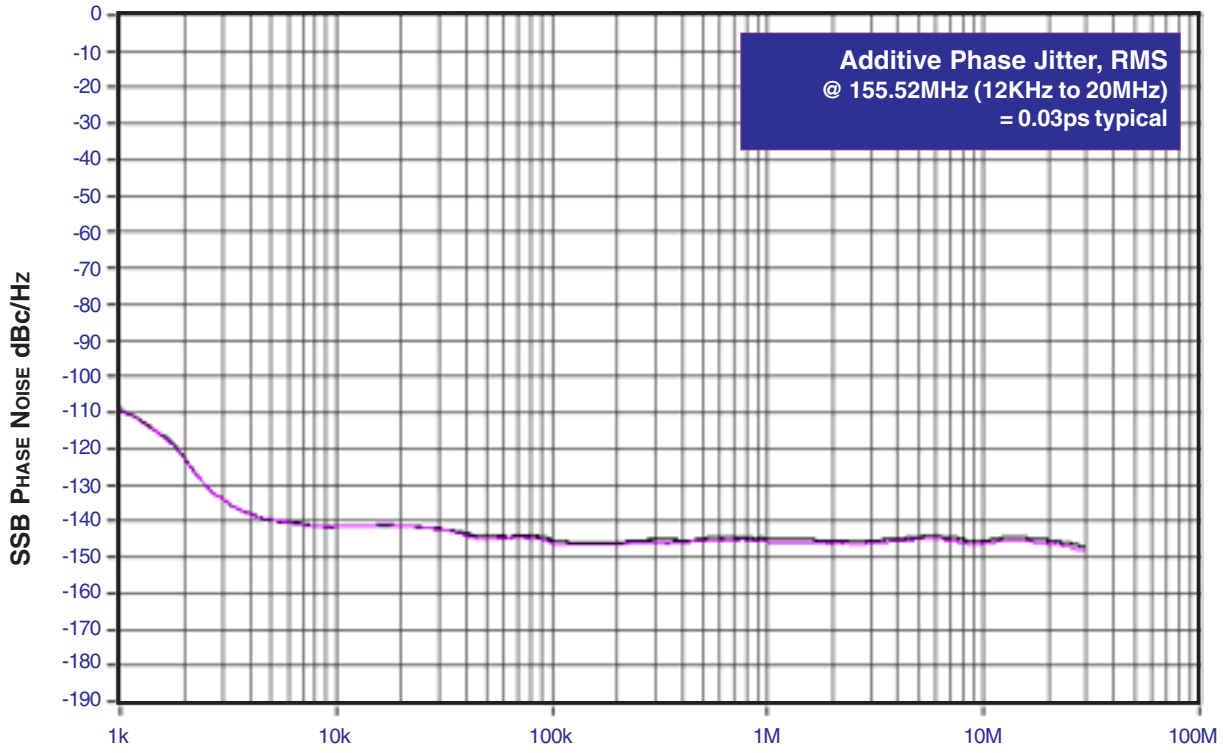

As with most timing specifications, phase noise measurements has issues. The primary issue relating to the limitations of the equipment. Often the noise floor of the equipment is higher than the noise floor of the device. This is illustrated above. The device meets the noise floor of what is shown, but can actually be lower. The phase noise is dependent on the input source and measurement equipment.

PARAMETER MEASUREMENT INFORMATION

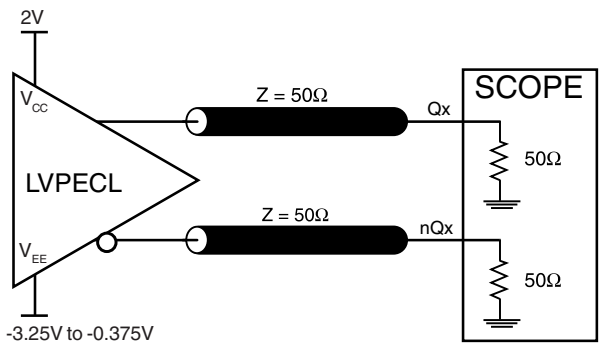

OUTPUT LOAD AC TEST CIRCUIT

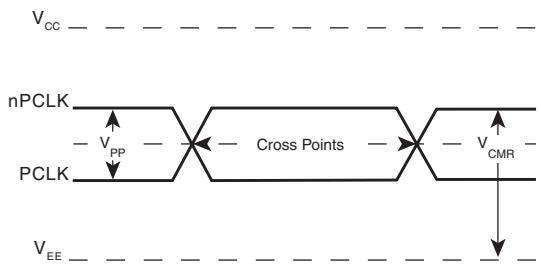

DIFFERENTIAL INPUT LEVEL

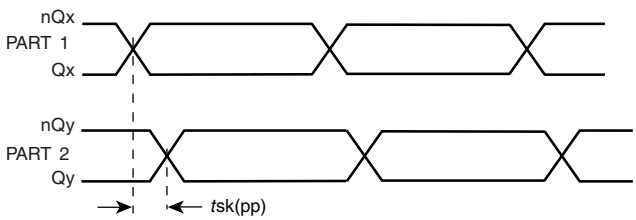

PART-TO-PART SKEW

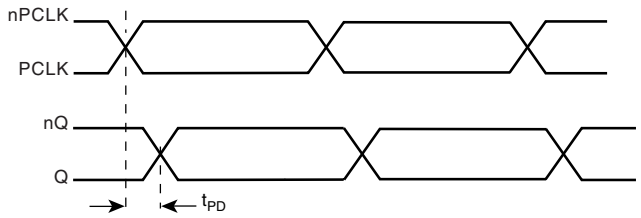

PROPAGATION DELAY

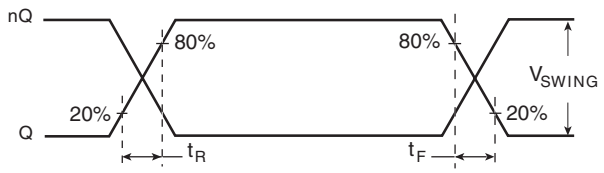

OUTPUT RISE/FALL TIME

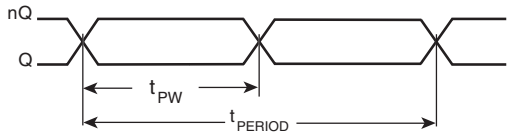

$$odc = \frac{t_{PW}}{t_{PERIOD}} \times 100\%$$

OUTPUT DUTY CYCLE/PULSE WIDTH/PERIOD

Distributor of Integrated Device Technology (IDT): Excellent Integrated System Limited
Datasheet of ICS853001AGLF - IC CLK BUFFER 1:1 2.5GHZ 8TSSOP
Contact us: sales@integrated-circuit.com Website: www.integrated-circuit.com

APPLICATION INFORMATION

WIRING THE DIFFERENTIAL INPUT TO ACCEPT SINGLE ENDED LVCMOS LEVELS

Figure 1A shows an example of the differential input that can be wired to accept single ended LVCMOS levels. The reference voltage level V_{BB} generated from the device is connected to the negative input. The C1 capacitor should be located as close as possible to the input pin.

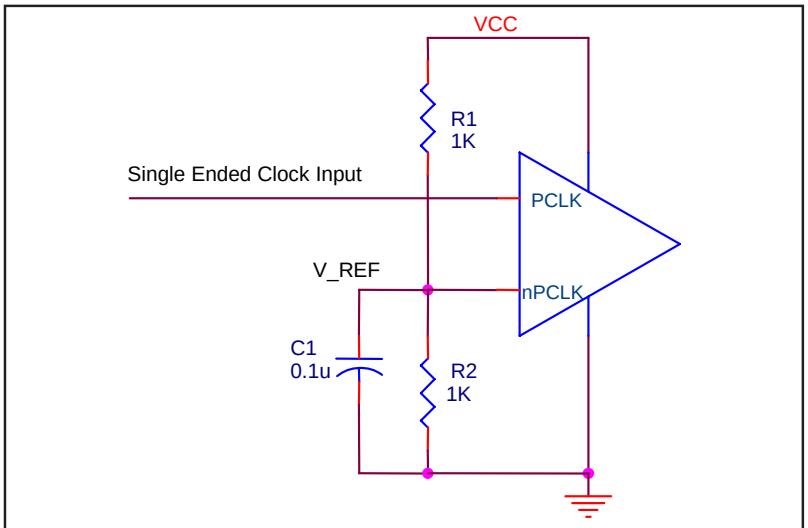

FIGURE 1A. SINGLE ENDED LVCMOS SIGNAL DRIVING DIFFERENTIAL INPUT

WIRING THE DIFFERENTIAL INPUT TO ACCEPT SINGLE ENDED LVPECL LEVELS

Figure 1B shows an example of the differential input that can be wired to accept single ended LVPECL levels. The reference voltage level V_{BB} generated from the device is connected to the negative input.

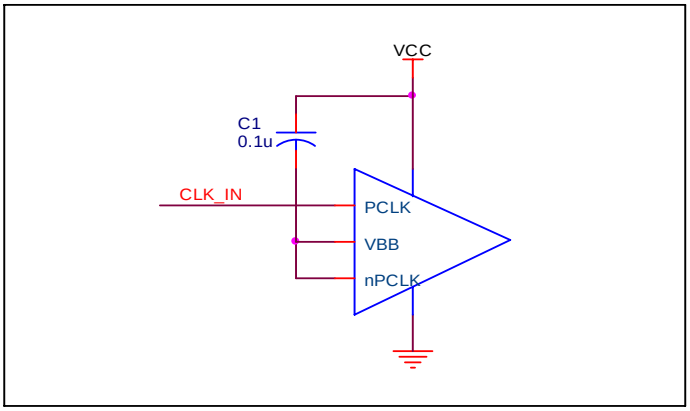

FIGURE 1B. SINGLE ENDED LVPECL SIGNAL DRIVING DIFFERENTIAL INPUT

Distributor of Integrated Device Technology (IDT): Excellent Integrated System Limited
Datasheet of ICS853001AGLF - IC CLK BUFFER 1:1 2.5GHZ 8TSSOP
Contact us: sales@integrated-circuit.com Website: www.integrated-circuit.com

TERMINATION FOR 2.5V LVPECL OUTPUT

Figure 2A and *Figure 2B* show examples of termination for 2.5V LVPECL driver. These terminations are equivalent to terminating 50Ω to V_{CC} - 2V. For V_{CC} = 2.5V, the V_{CC} - 2V is very close to ground level. The R3 in Figure 2B can be eliminated and the termination is shown in *Figure 2C.*

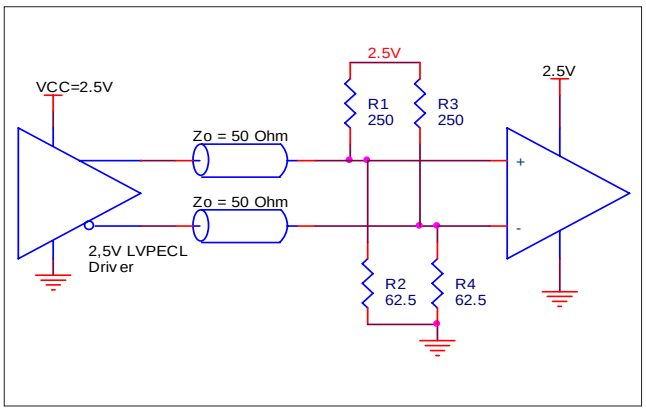

FIGURE 2A. 2.5V LVPECL DRIVER TERMINATION EXAMPLE

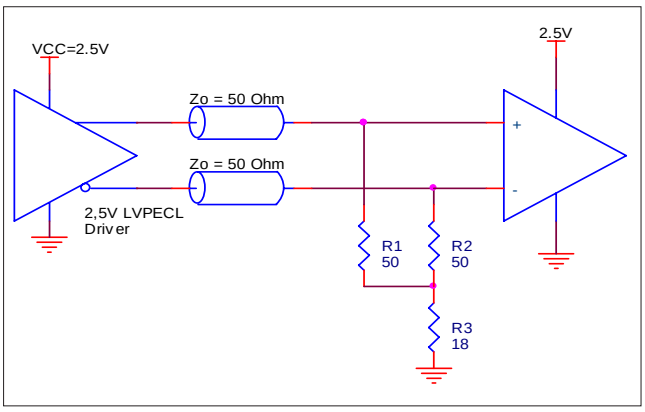

FIGURE 2B. 2.5V LVPECL DRIVER TERMINATION EXAMPLE

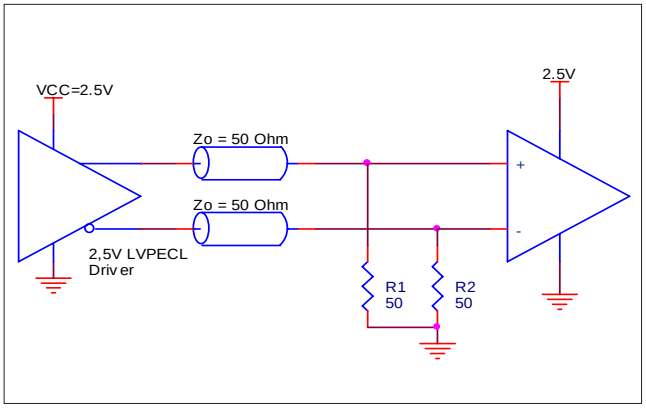

FIGURE 2C. 2.5V LVPECL TERMINATION EXAMPLE

Distributor of Integrated Device Technology (IDT): Excellent Integrated System Limited
Datasheet of ICS853001AGLF - IC CLK BUFFER 1:1 2.5GHZ 8TSSOP
Contact us: sales@integrated-circuit.com Website: www.integrated-circuit.com

TERMINATION FOR 3.3V LVPECL OUTPUTS

The clock layout topology shown below is a typical termination for LVPECL outputs. The two different layouts mentioned are recommended only as guidelines.

FOUT and nFOUT are low impedance follower outputs that generate ECL/LVPECL compatible outputs. Therefore, terminating resistors (DC current path to ground) or current sources must be used for functionality. These outputs are designed to drive 50Ω transmission lines. Matched impedance techniques should be used to maximize operating frequency and minimize signal distortion. *Figures 3A and 3B* show two different layouts which are recommended only as guidelines. Other suitable clock layouts may exist and it would be recommended that the board designers simulate to guarantee compatibility across all printed circuit and clock component process variations.

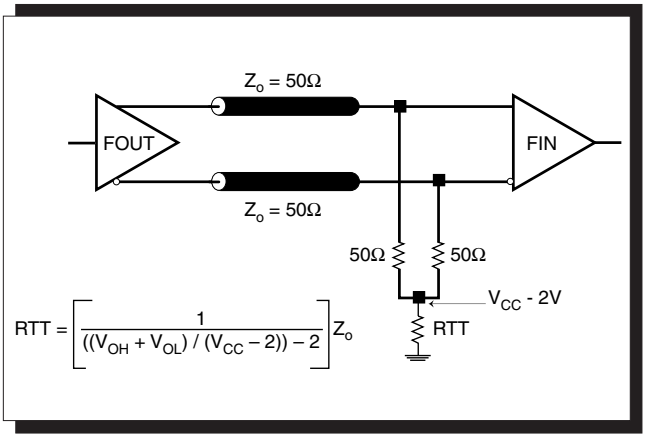

FIGURE 3A. LVPECL OUTPUT TERMINATION

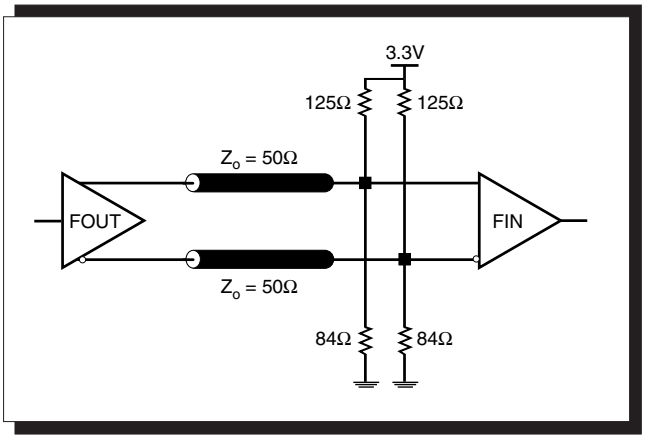

FIGURE 3B. LVPECL OUTPUT TERMINATION

TERMINATION FOR 5V LVPECL OUTPUT

This section shows examples of 5V LVPECL output termination. *Figure 4A* shows standard termination for 5V LVPECL. The termination requires matched load of 50Ω resistors pull down to V_{CC} - 2V = 3V at the receiver. *Figure 4B* shows Thevenin equivalence of Figure 4A. In actual application where the 3V DC power supply is not available, this approached is normally used.

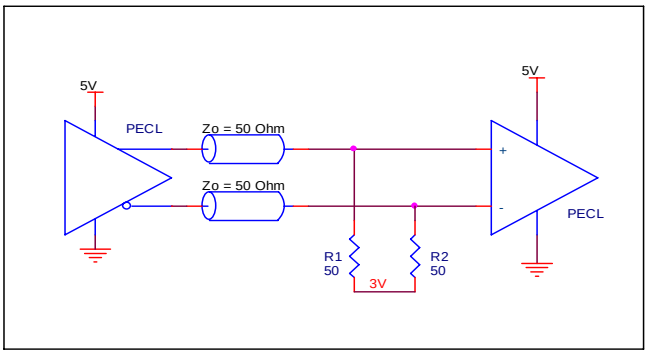

FIGURE 4A. STANDARD 5V PECL OUTPUT TERMINATION

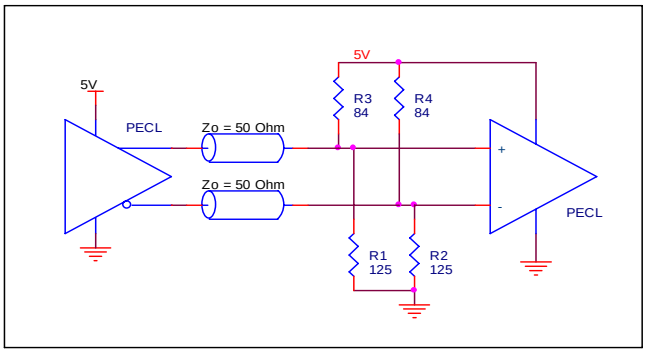

FIGURE 4B. 5V PECL OUTPUT TERMINATION EXAMPLE

Distributor of Integrated Device Technology (IDT): Excellent Integrated System Limited
Datasheet of ICS853001AGLF - IC CLK BUFFER 1:1 2.5GHZ 8TSSOP
Contact us: sales@integrated-circuit.com Website: www.integrated-circuit.com

LVPECL CLOCK INPUT INTERFACE

The PCLK /nPCLK accepts LVPECL, CML, SSTL and other differential signals. Both V_{SWING} and V_{OH} must meet the V_{PP} and V_{CMR} input requirements. *Figures 5A to 5F* show interface examples for the HiPerClockS PCLK/nPCLK input driven by the most common driver types. The input interfaces suggested here are examples only. If the driver is from another vendor, use their termination recommendation. Please consult with the vendor of the driver component to confirm the driver termination requirements.

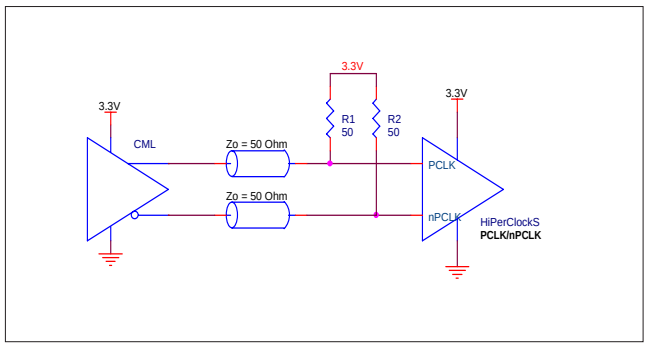

FIGURE 5A. HIPERCLOCKS PCLK/nPCLK INPUT DRIVEN BY AN OPEN COLLECTOR CML DRIVER

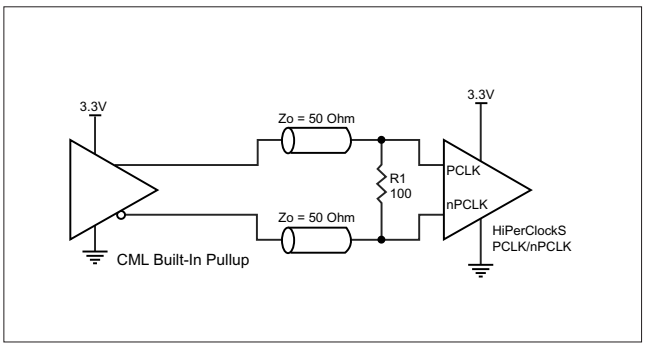

FIGURE 5B. HIPERCLOCKS PCLK/nPCLK INPUT DRIVEN BY A BUILT-IN PULLUP CML DRIVER

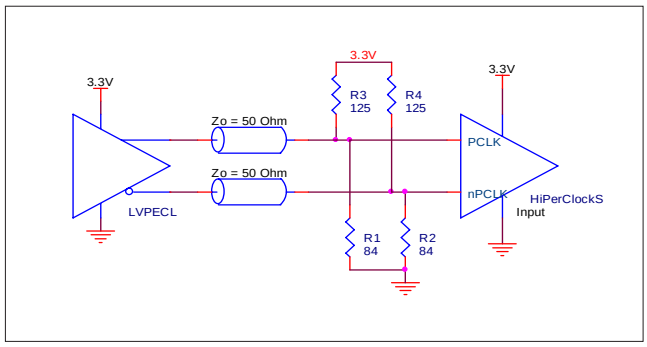

FIGURE 5C. HIPERCLOCKS PCLK/nPCLK INPUT DRIVEN BY A 3.3V LVPECL DRIVER

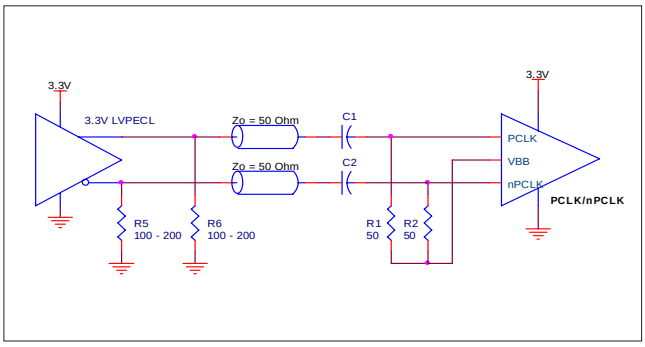

FIGURE 5D. HIPERCLOCKS PCLK/nPCLK INPUT DRIVEN BY A 3.3V LVPECL DRIVER WITH AC COUPLE

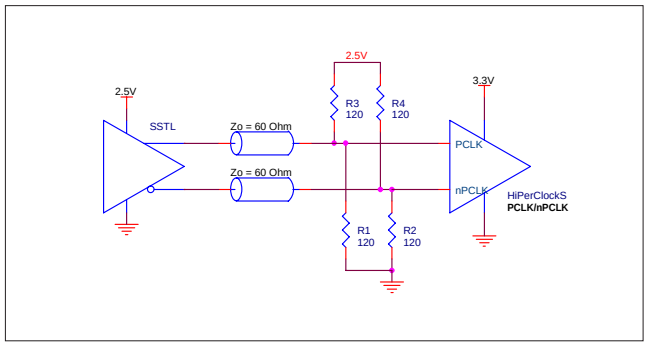

FIGURE 5E. HIPERCLOCKS PCLK/nPCLK INPUT DRIVEN BY AN SSTL DRIVER

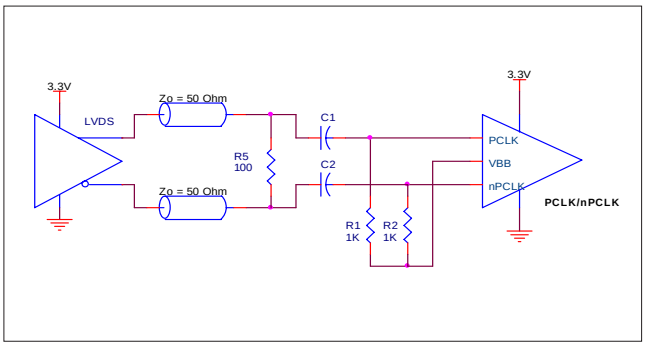

FIGURE 5F. HIPERCLOCKS PCLK/nPCLK INPUT DRIVEN BY A 3.3V LVDS DRIVER

Distributor of Integrated Device Technology (IDT): Excellent Integrated System Limited
Datasheet of ICS853001AGLF - IC CLK BUFFER 1:1 2.5GHZ 8TSSOP
Contact us: sales@integrated-circuit.com Website: www.integrated-circuit.com

APPLICATION SCHEMATIC EXAMPLE

Figure 6 shows an example of ICS853001 application schematic. In this example, the device is operated at V_{CC} = 3.3V. The decoupling capacitor should be located as close as possible to the power pin. The input is driven by a 3.3V LVPECL driver. Only one termination example is shown in this schematic. For more termination approaches, please refer to the LVPECL Termination Application Note.

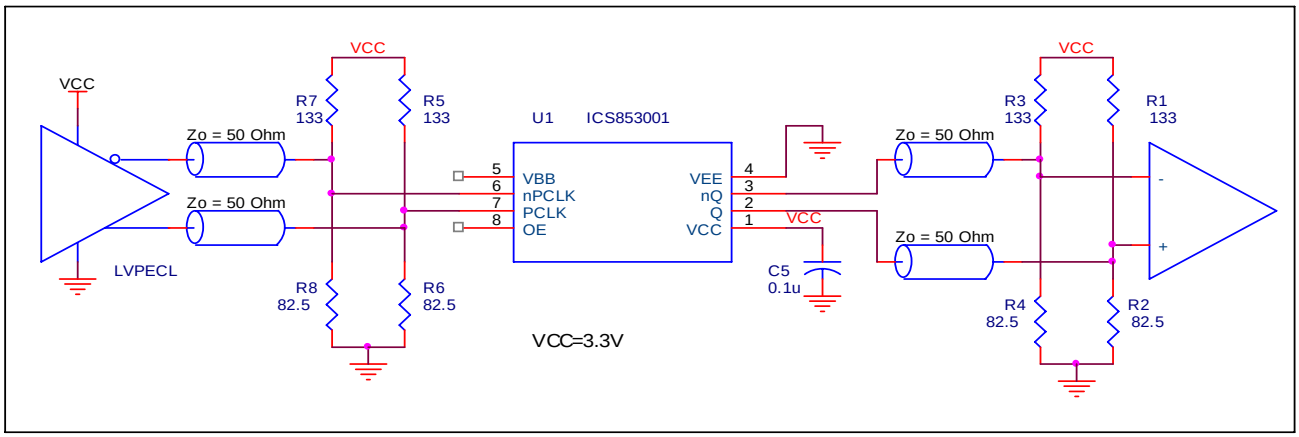

FIGURE 6. APPLICATION SCHEMATIC EXAMPLE

POWER CONSIDERATIONS

This section provides information on power dissipation and junction temperature for the ICS853001.
Equations and example calculations are also provided.

1. Power Dissipation.
The total power dissipation for the ICS853001 is the sum of the core power plus the power dissipated in the load(s).
The following is the power dissipation for V_{CC} = 5V + 5% = 5.25V, which gives worst case results.
NOTE: Please refer to Section 3 for details on calculating power dissipated in the load.

- Power $(core)_{MAX} = V_{CC_MAX} * I_{CC_MAX}$ = 5.25V * 27mA = **141.75mW**
- Power $(outputs)_{MAX}$ = **27.83mW/Loaded Output pair**

Total Power$_{_MAX}$ (3.465V) = 141.75mW + 27.83mW = **169.58mW**

2. Junction Temperature.
Junction temperature, Tj, is the temperature at the junction of the bond wire and bond pad and directly affects the reliability of the device. The maximum recommended junction temperature for HiPerClockS™ devices is 125°C.

The equation for Tj is as follows: $Tj = \theta_{JA} * Pd_total + T_A$

Tj = Junction Temperature

θ_{JA} = junction-to-ambient thermal resistance

Pd_total = Total device power dissipation (example calculation is in section 1 above)

T_A = Ambient Temperature

In order to calculate junction temperature, the appropriate junction-to-ambient thermal resistance θ_{JA} must be used. Assuming a moderate air flow of 1 meter per second and a multi-layer board, the appropriate value is 90.5°C/W per Table 5A below.
Therefore, Tj for an ambient temperature of 85°C with all outputs switching is:

85°C + 0.170W * 90.5°C/W = 100.4°C. This is well below the limit of 125°C.

This calculation is only an example. Tj will obviously vary depending on the number of loaded outputs, supply voltage, air flow, and the type of board (single layer or multi-layer).

TABLE 5A. THERMAL RESISTANCE θ_{JA} FOR 8-PIN TSSOP, FORCED CONVECTION

	θ_{JA} by Velocity (Meters per Second)		
	0	**1**	**2**
Multi-Layer PCB, JEDEC Standard Test Boards	101.7°C/W	90.5°C/W	89.8°C/W

TABLE 5B. THERMAL RESISTANCE θ_{JA} FOR 8-PIN SOIC, FORCED CONVECTION

	θ_{JA} by Velocity (Linear Feet per Minute)		
	0	**200**	**500**
Single-Layer PCB, JEDEC Standard Test Boards	153.3°C/W	128.5°C/W	115.5°C/W
Multi-Layer PCB, JEDEC Standard Test Boards	112.7°C/W	103.3°C/W	97.1°C/W

NOTE: Most modern PCB designs use multi-layered boards. The data in the second row pertains to most designs.

3. Calculations and Equations.

The purpose of this section is to derive the power dissipated into the load.

LVPECL output driver circuit and termination are shown in *Figure 7.*

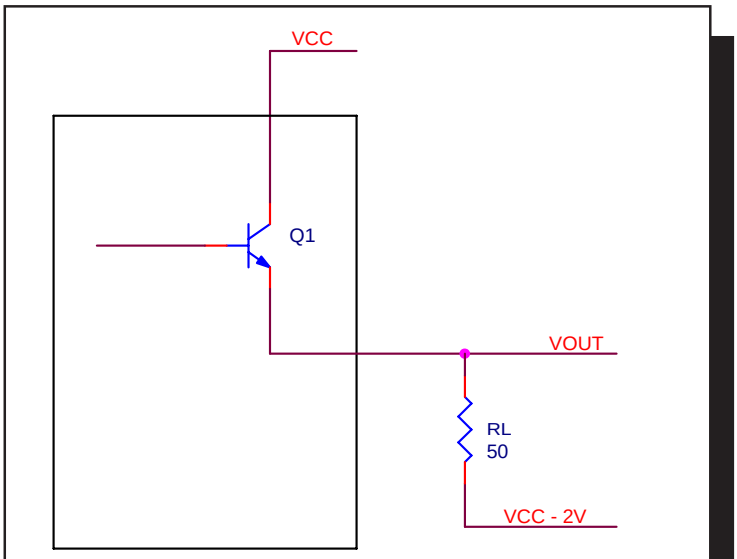

FIGURE 7. LVPECL DRIVER CIRCUIT AND TERMINATION

To calculate worst case power dissipation into the load, use the following equations which assume a 50Ω load, and a termination voltage of V_{CC} - 2V.

- For logic high, $V_{OUT} = V_{OH_MAX} = \mathbf{V_{CC_MAX} - 1.005V}$

  $(V_{CC_MAX} - V_{OH_MAX}) = \mathbf{1.005}$

- For logic low, $V_{OUT} = V_{OL_MAX} = \mathbf{V_{CC_MAX} - 1.78V}$

  $(V_{CC_MAX} - V_{OL_MAX}) = \mathbf{1.78V}$

Pd_H is power dissipation when the output drives high.
Pd_L is the power dissipation when the output drives low.

$Pd_H = [(V_{OH_MAX} - (V_{CC_MAX} - 2V))/R_L] * (V_{CC_MAX} - V_{OH_MAX}) = [(2V - (V_{CC_MAX} - V_{OH_MAX}))/R_L] * (V_{CC_MAX} - V_{OH_MAX}) =$
$[(2V - 1.005V)/50\Omega] * 1.005V = \mathbf{20mW}$

$Pd_L = [(V_{OL_MAX} - (V_{CC_MAX} - 2V))/R_L] * (V_{CC_MAX} - V_{OL_MAX}) = [(2V - (V_{CC_MAX} - V_{OL_MAX}))/R_L] * (V_{CC_MAX} - V_{OL_MAX}) =$
$[(2V - 1.78V)/50\Omega] * 1.78V = \mathbf{7.83mW}$

Total Power Dissipation per output pair = Pd_H + Pd_L = **27.83mW**

Distributor of Integrated Device Technology (IDT): Excellent Integrated System Limited
Datasheet of ICS853001AGLF - IC CLK BUFFER 1:1 2.5GHZ 8TSSOP
Contact us: sales@integrated-circuit.com Website: www.integrated-circuit.com

RELIABILITY INFORMATION

TABLE 6A θ_{JA} VS. AIR FLOW TABLE FOR 8 LEAD TSSOP

θ_{JA} by Velocity (Meters per Second)	0	1	2
Multi-Layer PCB, JEDEC Standard Test Boards	101.7°C/W	90.5°C/W	89.8°C/W

TABLE 6B. θ_{JA} VS. AIR FLOW TABLE 8 LEAD SOIC

θ_{JA} by Velocity (Linear Feet per Minute)	0	200	500
Single-Layer PCB, JEDEC Standard Test Boards	153.3°C/W	128.5°C/W	115.5°C/W
Multi-Layer PCB, JEDEC Standard Test Boards	112.7°C/W	103.3°C/W	97.1°C/W

NOTE: Most modern PCB designs use multi-layered boards. The data in the second row pertains to most designs.

TRANSISTOR COUNT

The transistor count for ICS853001 is: 141

PACKAGE OUTLINE - G SUFFIX FOR 8 LEAD TSSOP

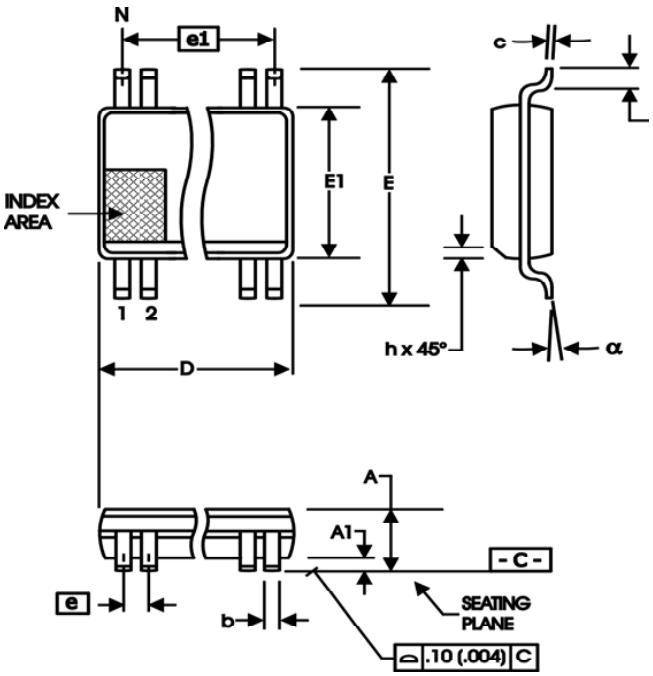

PACKAGE OUTLINE - M SUFFIX FOR 8 LEAD SOIC

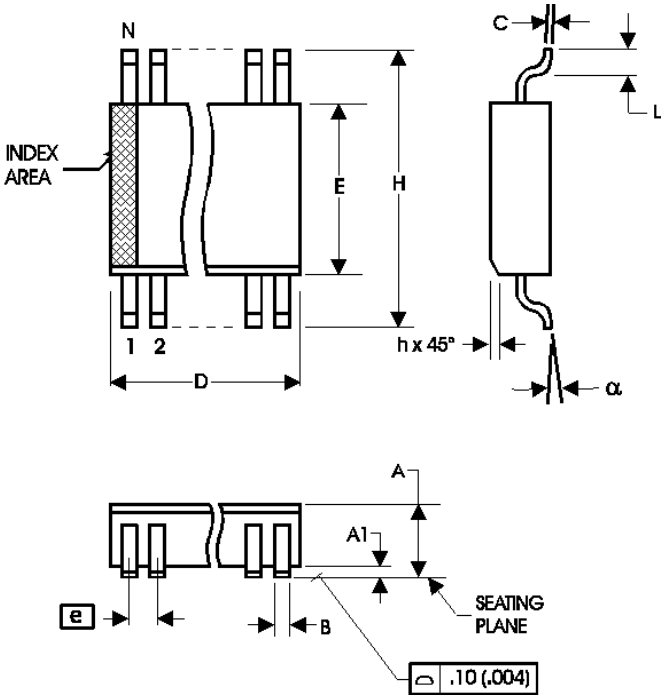

TABLE 7A. PACKAGE DIMENSIONS

SYMBOL	Millimeters	
	Minimum	Maximum
N	8	
A	--	1.10
A1	0	0.15
A2	0.79	0.97
b	0.22	0.38
c	0.08	0.23
D	3.00 BASIC	
E	4.90 BASIC	
E1	3.00 BASIC	
e	0.65 BASIC	
e1	1.95 BASIC	
L	0.40	0.80
α	0°	8°
aaa	--	0.10

Reference Document: JEDEC Publication 95, MO-187

TABLE 7B. PACKAGE DIMENSIONS

SYMBOL	Millimeters	
	MINIMUN	MAXIMUM
N	8	
A	1.35	1.75
A1	0.10	0.25
B	0.33	0.51
C	0.19	0.25
D	4.80	5.00
E	3.80	4.00
e	1.27 BASIC	
H	5.80	6.20
h	0.25	0.50
L	0.40	1.27
α	0°	8°

Reference Document: JEDEC Publication 95, MS-012

Distributor of Integrated Device Technology (IDT): Excellent Integrated System Limited
Datasheet of ICS853001AGLF - IC CLK BUFFER 1:1 2.5GHZ 8TSSOP
Contact us: sales@integrated-circuit.com Website: www.integrated-circuit.com

TABLE 8. ORDERING INFORMATION

Part/Order Number	Marking	Package	Shipping Packaging	Temperature
853001AG	001A	8 lead TSSOP	tube	-40°C to 85°C
853001AGT	001A	8 lead TSSOP	2500 tape & reel	-40°C to 85°C
853001AGLF	01AL	8 lead "Lead-Free" TSSOP	tube	-40°C to 85°C
853001AGLFT	01AL	8 lead "Lead-Free" TSSOP	2500 tape & reel	-40°C to 85°C
853001AM	853001A	8 lead SOIC	tube	-40°C to 85°C
853001AMT	853001A	8 lead SOIC	2500 tape & reel	-40°C to 85°C
853001AMLF	853001AL	8 lead "Lead-Free" SOIC	tube	-40°C to 85°C
853001AMLFT	853001AL	8 lead "Lead-Free" SOIC	2500 tape & reel	-40°C to 85°C

While the information presented herein has been checked for both accuracy and reliability, Integrated Device Technology, Incorporated (IDT) assumes no responsibility for either its use or for infringement of any patents or other rights of third parties, which would result from its use. No other circuits, patents, or licenses are implied. This product is intended for use in normal commercial applications. Any other applications such as those requiring extended temperature ranges, high reliability or other extraordinary environmental requirements are not recommended without additional processing by IDT. IDT reserves the right to change any circuitry or specifications without notice. IDT does not authorize or warrant any IDT product for use in life support devices or critical medical instruments.

Distributor of Integrated Device Technology (IDT): Excellent Integrated System Limited
Datasheet of ICS853001AGLF - IC CLK BUFFER 1:1 2.5GHZ 8TSSOP
Contact us: sales@integrated-circuit.com Website: www.integrated-circuit.com

REVISION HISTORY SHEET				
Rev	**Table**	**Page**	**Description of Change**	**Date**
A		6	Output Rise/Fall Time Diagram - added Labels.	11/24/08