Excellent Integrated System Limited

Stocking Distributor

Click to view price, real time Inventory, Delivery & Lifecycle Information:

ASSMANN WSW Components
AT-K-26-4-B/100-R

For any questions, you can email us directly:
sales@integrated-circuit.com

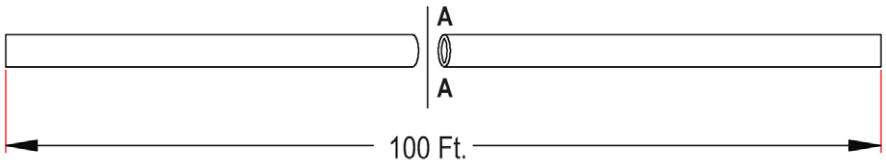

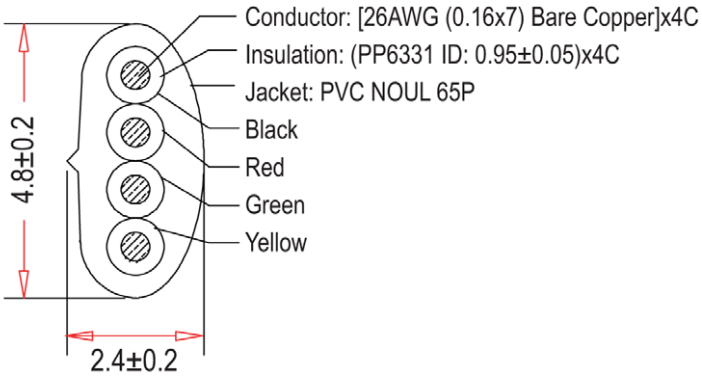

Sec: A - A

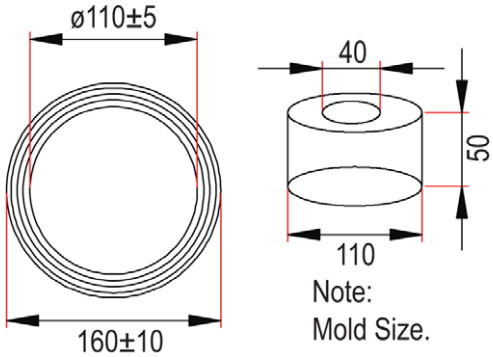

Note:
Mold Size.

100Ft/R. PE Film

Unit: MM

Scale	1:1					Name	Item No. AT-K-26-4-B/100
TOLERANCE				Drawn	12.19.11	Chappell	
X.X	±0.40			Approved			Title Modular Straight cable - Raw, 4 Contact, 26AWG, Black, 100Ft.
X.XX	±0.25						
X.XXX	±0.15						Drawing No. rev00
Angle	±3°						
			Modification	Date	Name		Replace / Sheet

RoHS Complaint

ASSMANN WSW components