Excellent Integrated System Limited

Stocking Distributor

Click to view price, real time Inventory, Delivery & Lifecycle Information:

Fox Electronics
FVXO-HC53B-250

For any questions, you can email us directly:
sales@integrated-circuit.com

Distributor of Fox Electronics: Excellent Integrated System Limited
Datasheet of FVXO-HC53B-250 - OSC VCXO 250.000MHZ HCMOS SMD
Contact us: sales@integrated-circuit.com Website: www.integrated-circuit.com

Model: FVXO-HC53 SERIES

HCMOS 5 x 3.2mm 3.3V V C X O — Freq: 0.75 MHz to 250MHz

Rev. 11/28/2007

Features

- XTREMELY Low Jitter
- Low Cost
- XPRESS Delivery
- Frequency Resolution to six decimal places
- Absolute Pull Range (APR) of ±50ppm
- -20 to +70°C or -40 to +85°C operating temperatures
- Tri-State Enable / Disable Feature
- Industry Standard Package, Footprint & Pin-Out
- Fully RoHS compliant
- Gold over Nickel Termination Finish
- Serial ID with Comprehensive Traceability

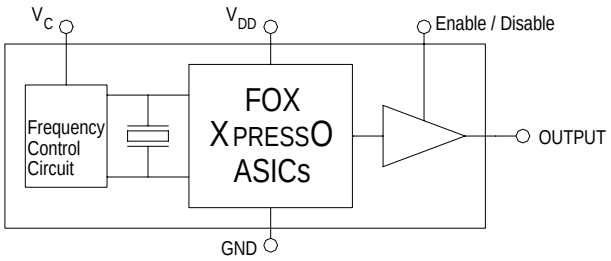

For more information -- Click on the drawing

Applications

- ANY application requiring an oscillator
- SONET
- Ethernet
- Storage Area Network
- Broadband Access
- Microprocessors / DSP / FPGA
- Industrial Controllers
- Test and Measurement Equipment
- Fiber Channel

Description

The Fox XPRESSO Crystal Oscillator is a breakthrough in configurable Frequency Control Solutions. XPRESSO utilizes a family of proprietary ASICs, designed and developed by Fox, with a key focus on noise reduction technologies.

The 3rd order Delta Sigma Modulator reduces noise to the levels that are comparable to traditional Bulk Quartz and SAW oscillators. The ASICs family has ability to select the output type, input voltages, and temperature performance features.

With the XPRESS lead-time, low cost, low noise, wide frequency range, excellent ambient performance, XpressO is an excellent choice over the conventional technologies.

Finished XPRESSO parts are 100% final tested.

Contents

	page
Model Selection & Part Number Guide	2
Electrical Characteristic	3
Absolute Maximums	4
Output Wave Characteristics	4
Phase Noise	5
Jitter	5
Pin Assignment	6
Recommended Circuit	6
Reflow	6
Mechanical Drawing and Pad Layout	7
Tape and Reel Specification	8
Label	8
Traceability – LOT Number & Serial Identification	9
RoHS Material Declaration	10
SGS Report	11 & 12
Mechanical Test	13
Burn-In Test	13
MTTF / FITS calculations	14
Other XPRESSO Links	15
Fox Contact Information	15

FOXElectronics 5570 Enterprise Parkway Fort Myers, Florida 33905 USA +1.239.693.0099 FAX +1.239.693.1554 http://www.foxonline.com

© 2014 FOX ELECTRONICS | ISO9001:2008 Certified

Model Selection Guide & Fox Part Number

STEP #1: Customer selects the Model Description and provides to Fox Customer Service

Model Description

F V X O – H C 5 3 B R – 3 5 . 3 2 8 Frequency (in MHz)

Resolutions to 6 places past the decimal point

blank = -20°C to +70°C
R = -40°C to +85°C

H = HCMOS
L = LVDS
P = LVPECL
X = HCMOS *(comp 2nd Output)*

C = Ceramic
Q = Quartz

5 = 5 x 3.2mm
7 = 7 x 5mm

3 = 3.3 V
2 = 2.5 V

B **= ±50ppm Absolute Pull Range**

STEP #2: The Fox Customer Service team provides a customer specific Part Number for use on their Bill Of Materials (BOM).

Fox Part Number *(The assigned Fox Part Number must be on the BOM – not the above Model Description)*
(This will ensure receipt of the proper part)

7 9 3 – 3 5 . 3 2 8 – 2

The 1st Field
Product Code #
793 = FVXO–HC5
792 = FVXO–HC7
797 = FVXO–LC5
794 = FVXO–LC7
795 = FVXO–PC5
796 = FVXO–PC7

The 2nd Field
The Customer's Frequency

The 3rd Field
Fox Internally Generated Number
(If any specification changes, the last digits change)
(The same specs for a different customer also changes the last digits)

This example, FVXO-HC53BR-35.328 = Voltage Controlled, HCMOS Output, Ceramic, 5 x 3.2mm Package, 3.3V, ±50 PPM Absolute Pull Range, -40 to +85°C Temperature Range, at 35.328 MHz

Absolute Maximum Ratings *(Useful life may be impaired. For user guidelines only, not tested)*

Parameters	Symbol	Condition	Maximum Value (unless otherwise noted)
Input Voltage	V_{DD}		–0.5V to +5.0V
Operating Temperature	T_{AMAX}		–55°C to +105°C
Storage Temperature	T_{STG}		–55°C to +125°C
Junction Temperature			150°C
ESD Sensitivity	HBM	Human Body Model	1 kV

© 2008 FOX ELECTRONICS | ISO9001:2000 Certified

Electrical Characteristics

Parameters	Symbol	Condition	Maximum Value (unless otherwise noted)
Frequency Range	F_O		0.750 to 250.000 MHz
Absolute Pull Range Note 1	APR		± 50 ppm MIN
Temperature Range	T_O T_{STG}	Standard operating *Optional operating* Storage	-20°C to +70°C *-40°C to +85°C* -55°C to +125°C
Supply Voltage	V_{DD}	Standard	3.3 V ± 5%
Input Current (@ 15pF LOAD)	I_{DD}	0.75 ~ 20 MHz 20+ ~ 50 MHz 50+ ~ 130 MHz 130+ ~ 200 MHz 200+ ~ 250 MHz	32 mA 35 mA 47 mA 55 mA 60 mA
Output Load	HCMOS	Standard *Operational To 125MHz*	15 pF 30 pF
Start-Up Time	T_S		10 mS
Output Enable / Disable Time			100 nS
Moisture Sensitivity Level	MSL	*JEDEC J-STD-20*	1
Termination Finish			Au

Note 1 – Inclusive of 25°C tolerance, operating temperature range, input voltage change, load change, aging, shock and vibration.

Frequency Control (V_C) Input -- pin # 1

Parameters	Symbol	Condition	Maximum Value (unless otherwise noted)
Control Voltage Tuning Slope [1]		0V to V_{DD}	40 ~ 75 ppm/V Typ [2]
Control Voltage Linearity [2]	L_{VC}		± 10%
Control Voltage Tuning Range	V_C		0V ~ 3.3V
Modulation Bandwidth	BW		10 kHz
Nominal Control Voltage	V_{CNOM}	@ f_0	1.65V

NOTES:

[1] Actual slope is affected by frequency and accuracy settings.

[2] For an example of linearity, see the graph below. *(The middle line represents the default Fox factory setting)*

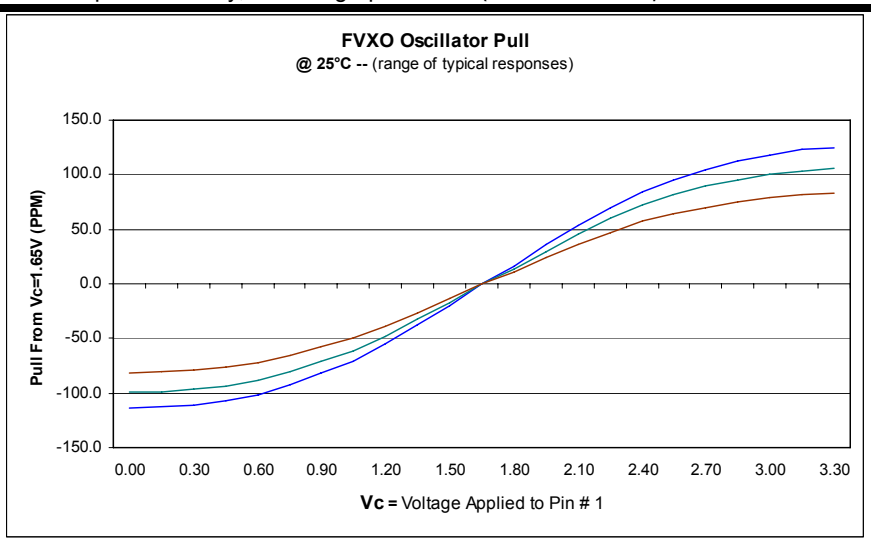

© 2008 FOX ELECTRONICS | ISO9001:2000 Certified

Output Wave Characteristics

Parameters	Symbol	Condition	Maximum Value (unless otherwise noted)
Output LOW Voltage	V_{OL}	0.75 to 150 MHz 150+ to 250 MHz	10% V_{DD} 20% V_{DD}
Output HIGH Voltage	V_{OH}	0.75 to 150 MHz 150+ to 250 MHz	90% V_{DD} MIN 80% V_{DD} MIN
Output Symmetry (See Drawing Below)		@ 50% V_{DD} Level	45% ~ 55%
Output Enable (PIN # 2) Voltage	V_{IH}		> 70% V_{DD}
Output Disable (PIN # 2) Voltage	V_{IL}		< 30% V_{DD}
Cycle Rise Time (See Drawing Below)	T_R	0.75 to 150 MHz 150+ to 250 MHz	3 nS (10%~90%) 3 nS (20%~80%)
Cycle Fall Time (See Drawing Below)	T_F	0.75 to 150 MHz 150+ to 250 MHz	3 nS (90%~10%) 3 nS (80%~20%)

If 30% to 70% times are used, Rise and Fall times change to 1.5 nS from 0.75 to 250MHz
If 20% to 80% times are used, Rise and Fall times change to 2 nS from 0.75 to 150MHz

Rise Time / Fall Time Measurements

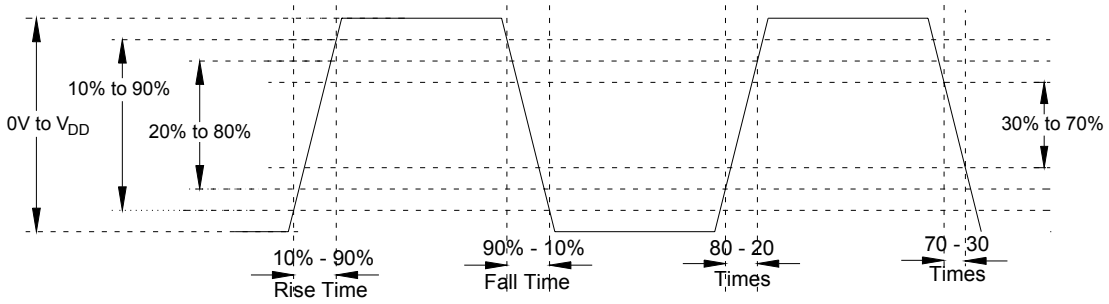

Oscillator Symmetry

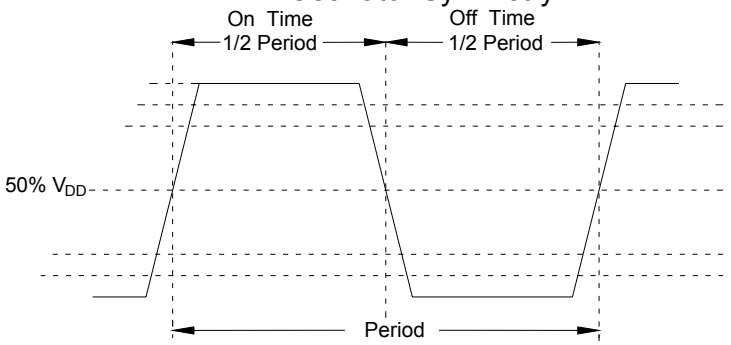

Ideally, Symmetry should be 50/50 -- Other expressions are 45/55 or 55/45

© 2008 FOX ELECTRONICS | ISO9001:2000 Certified

Phase Noise

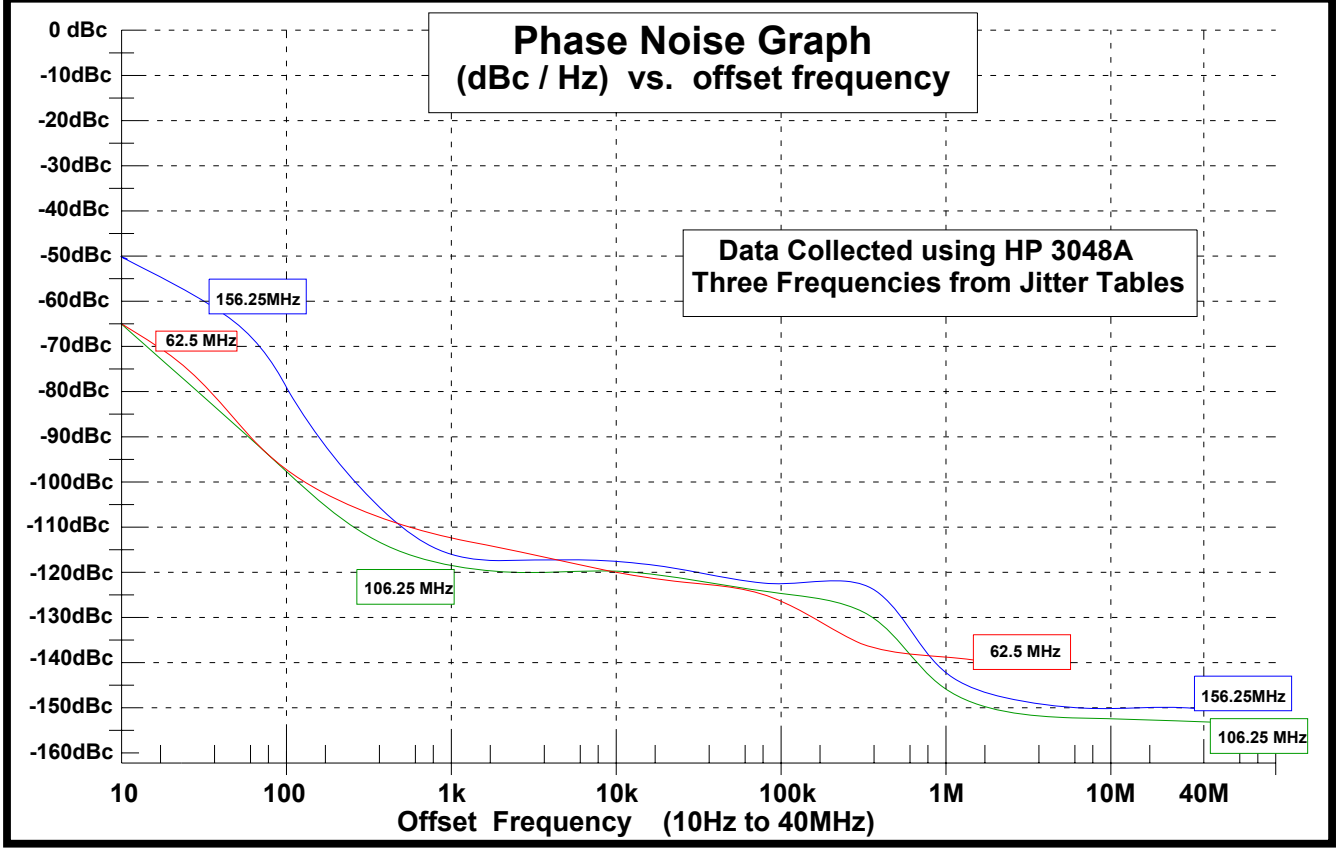

Jitter is frequency dependent. Below are typical values at select frequencies.

Phase Jitter & Time Interval Error (TIE)

Frequency	Phase Jitter (12kHz to 20MHz)	T I E (Sigma of Jitter Distribution)	Units
62.5 MHz	0.93	2.8	pS RMS
106.25 MHz	0.86	3.2	pS RMS
125 MHz	0.75	2.7	pS RMS
156.25 MHz	0.77	3.3	pS RMS

Phase Jitter is integrated from HP3048 Phase Noise Measurement System; measured directly into 50 ohm input; V_{DD} = 3.3V.
TIE was measured on LeCroy LC684 Digital Storage Scope, directly into 50 ohm input, with Amherst M1 software; V_{DD} = 3.3V.
*Per **MJSQ** spec (Methodologies for Jitter and Signal Quality specifications)*

Random & Deterministic Jitter Composition

Frequency	Random (Rj) (pS RMS)	Deterministic (Dj) (pS P-P)	Total Jitter (Tj) (14 x Rj) + Dj
62.5 MHz	1.28	6.8	25.1 pS
106.25 MHz	1.28	8.4	26.6 pS
125 MHz	1.20	8.0	25.2 pS
156.25 MHz	1.27	8.6	26.6 pS

Rj and Dj, measured on LeCroy LC684 Digital Storage Scope, directly into 50 ohm input, with Amherst M1 software.
*Per **MJSQ** spec (Methodologies for Jitter and Signal Quality specifications)*

© 2008 FOX ELECTRONICS | ISO9001:2000 Certified

Pin Description and Recommended Circuit

Pin #	Name	Type	Function
1	V_C	Control	Frequency Control by changing voltage
2	E / D [1]	Logic	Enable / Disable Control of Output (0 = Disabled)
3	GND	Ground	Electrical Ground for V_{DD}
4	Output	Output	HCMOS Oscillator Output
5	*N. C.*	Hi Z	*No Connection (Factory Use ONLY)*
6	V_{DD} [2]	Power	Power Supply Source Voltage

NOTES:

[1] Includes pull-up resistor to V_{DD} to provide output when the pin (2) is No Connect.

[2] Installation should include a 0.01µF bypass capacitor placed between V_{DD} (Pin 6) and GND (Pin 3) to minimize power supply line noise.

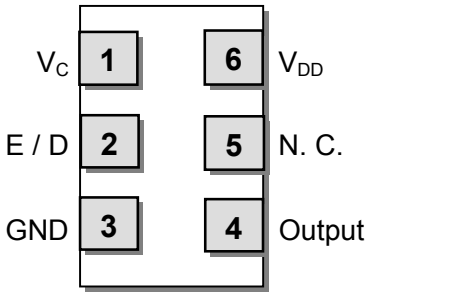

Terminations as viewed from the Top

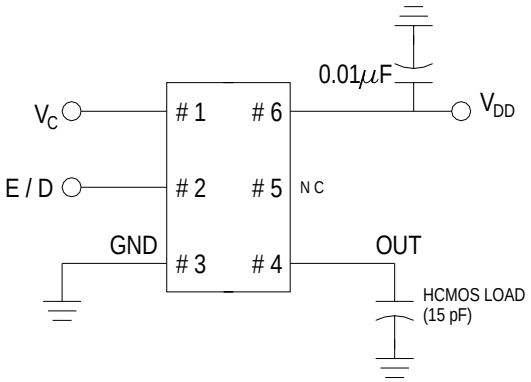

Enable / Disable Control

	Pin # 2 (state)	Output (Pin # 4)
	OPEN (No Connection)	ACTIVE Output
	"1" Level V_{IH} > 70% V_{DD}	ACTIVE Output
	"0" Level V_{IL} < 30% V_{DD}	High Impedance

Soldering Reflow Profile (2 times Maximum at 260°C for 10 seconds MAX)

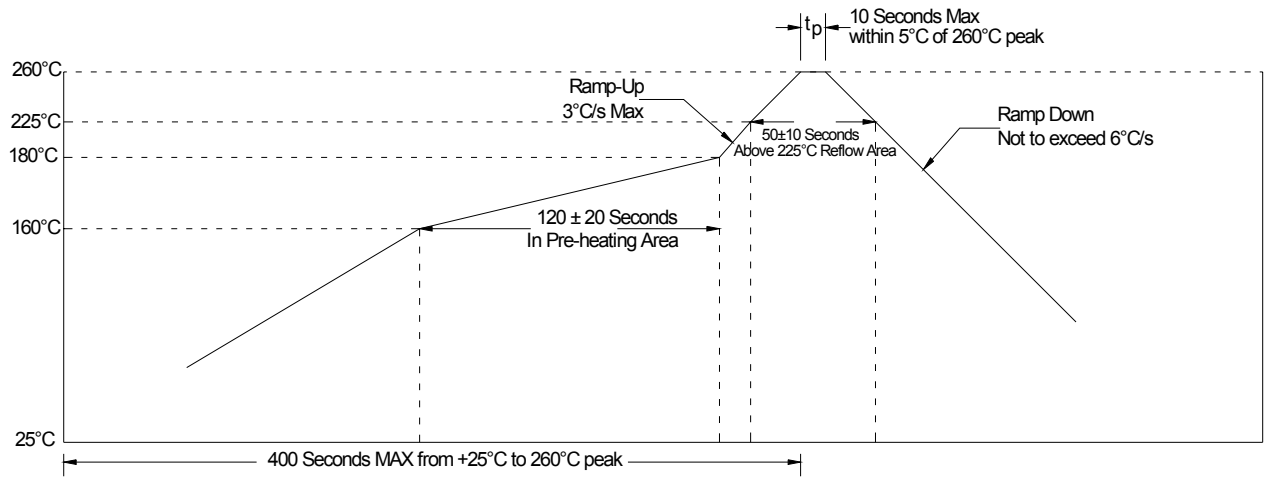

© 2008 FOX ELECTRONICS | ISO9001:2000 Certified

Mechanical Dimensional Drawing & Pad Layout

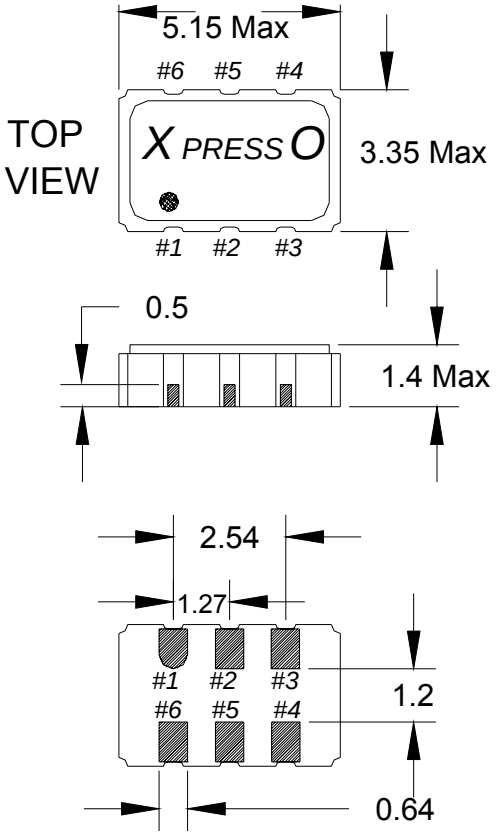

Actual part marking is depicted.

See **Traceability** *(pg. 9)* for more information

Recommended Solder Pad Layout

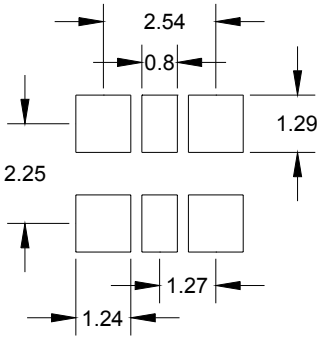

Pin Connections

#1) V_C	**#4) Output**
#2) E/D	**#5) *NC***
#3) GND	**#6) V_{DD}**

Drawing is for reference to critical specifications defined by size measurements.
Certain non-critical visual attributes, such as side castellations, reference pin shape, etc. may vary

© 2008 FOX ELECTRONICS | ISO9001:2000 Certified

Tape and Reel Dimensions

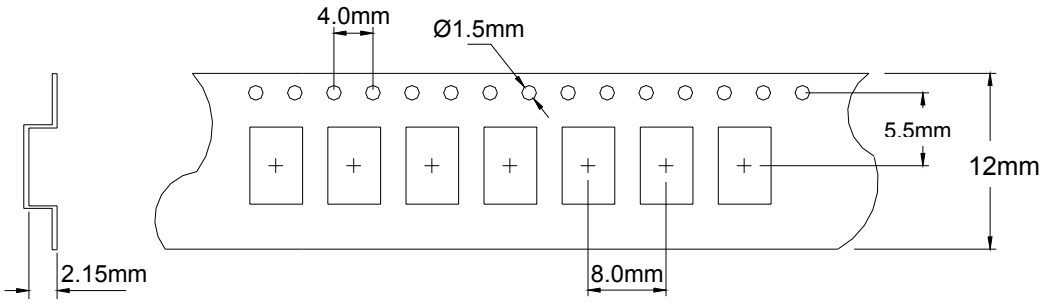

1k Reel Dimensions in mm

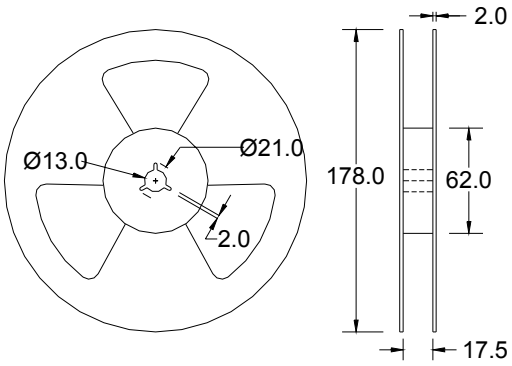

2k Reel Dimensions in mm

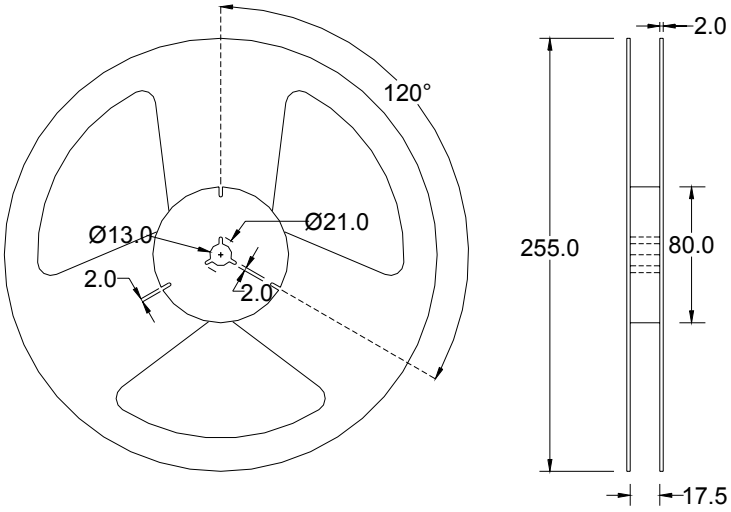

Labeling (Reels and smaller packaging are labeled with the below)

- Fox Part Number: **793-35.328-2**
- Quantity: **2000** pieces
- Description: **FVXO-HC53BR-35.328**
- Date Code **0745**
  (YYWW 2007 45th wk)
- LOT # **24435**
  If traceability should become necessary

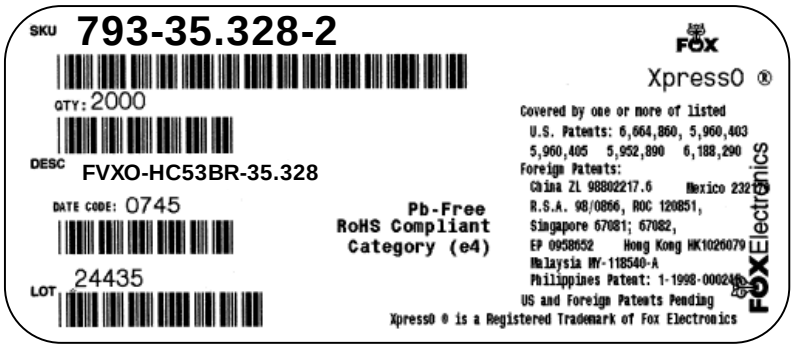

An additional identification code is contained internally if tracking should ever be necessary

© 2008 FOX ELECTRONICS | ISO9001:2000 Certified

Traceability – LOT Number & Serial Identification

LOT Number

The LOT Number has direct ties to the customer purchase order. The LOT Number is marked on the "Reel" label, and also stored internally on non-volatile memory inside the XPRESSO part. XPRESSO parts that are shipped Tape and Reel, are also placed in an Electro Static Discharge (ESD) bag and will have the LOT Number labeled on the exterior of the ESD bag.

It is recommended that the XPRESSO parts remain in this ESD bag during storage for protection and identification.

If the parts become separated from the label showing the LOT Number, it can be retrieved from inside one of the parts, and the information that can be obtained is listed below:

- Customer Purchase Order Number
- Internal Fox Sales Order Number
- Dates that the XPRESSO part was shipped from the factory
- The assigned customer part number
- The specification that the part was designed for

Serial Identification

The Serial ID is the individualized information about the configuration of that particular XPRESSO part. The Serial ID is unique for each and every XPRESSO part, and can be read by special Fox equipment.

With the Serial ID, the below information can be obtained about that individual, XPRESSO part:

- Equipment that the XPRESSO part was configured on
- Raw material used to configure the XPRESSO part
- Traceability of the raw material back to the foundries manufacturing lot
- Date and Time that the part was configured
- Any optimized electrical parameters based on customer specifications
- Electrical testing of the actual completed part
- Human resource that was monitoring the configuration of the part

Fox has equipment placed at key Fox locations World Wide to read the Lot Identification and Serial Number of any XPRESSO part produced and can then obtain the information from above within 24 hours

© 2008 FOX ELECTRONICS | ISO9001:2000 Certified

RoHS Material Declaration

	Material Name	Component	Content (mg)	Content (wt%)	(CAS Number)
Cover	Kovar	Nickel (Ni)	1.890	3.09%	7440-02-0
		Cobalt (Co)	1.113	1.82%	7440-48-4
		Iron (Fe)	3.540	5.78%	7439-89-6
Base	Ceramic	Alumina (Al_2O_3)	35.484	57.98%	1344-28-1
		Silicon Oxide (SiO_2)	1.733	2.83%	14808-60-7
		Chromium Oxide (Cr_2O_3)	0.268	0.44%	1308-38-9
		Molybdenum Oxide (MoO_2)	0.364	0.59%	18868-43-4
		Magnesium Oxide (MgO)	0.234	0.38%	1309-48-4
		Calcium Oxide (CaO)	0.253	0.41%	1305-78-8
	+ Metallization	Tungsten (W)	6.290	10.28%	7440-33-7
		Molybdenum (Mo)	0.195	0.32%	7439-98-7
	+ Nickel Plating	Nickel (Ni)	0.810	1.32%	7440-02-0
		Cobalt (Co)	0.203	0.33%	7440-48-4
	+ Gold Plating	Gold (Au)	0.281	0.46%	7440-57-5
	＋Seal ring	Iron (Fe)	2.438	3.98%	7439-89-6
		Nickel (Ni)	1.309	2.14%	7440-02-0
		Cobalt (Co)	0.768	1.25%	7440-48-4
	＋silver solder	Silver (Ag)	1.191	1.95%	7440-22-4
		Copper (Cu)	0.210	0.34%	7440-50-8
ＩＣ	ＩＣ	Aluminum (Al)	0.0021	0.00343%	7429-90-5
		Silicon (Si)	0.950	1.55%	7440-21-3
	Gold	Gold (Au)	0.480	0.784%	7440-57-5
	Adhesive	Silver (Ag)	0.000210	0.000343%	7440-22-4
		Epoxy	0.0000700	0.0001144%	
Crystal	Crystal	Silicon Dioxide (SiO_2)	1.170	1.91%	14808-60-7
	Electrode	Silver (Ag)	0.019	0.0310%	7440-22-4
		Nickel (Ni)	0.000159	0.000260%	7440-02-0
	Adhesive	Silver (Ag)	0.00037	0.000605%	7440-22-4
		Silicon (Si)	0.000125	0.000204%	7440-21-3
TOTAL			**61.196**	**100.00%**	

© 2008 FOX ELECTRONICS | ISO9001:2000 Certified

3rd Party (SGS) Material Report

Test Report No. 2053204/EC Date : Mar 01 2006 Page 1 of 2

FOX ELECTRONICS
5570 ENTERPRISE PARKWAY
FT. MYERS, FL 33905

Report on the submitted sample said to be CERAMIC SEAM SEAL OSCILLATOR.

SGS Job No.	:	1981176
Supplier / Manufacturer	:	FOX ELECTRONICS
Sample Receiving Date	:	FEB 17 2006
Testing Period	:	FEB 18 - 24 2006

Test Requested:

1) To determine the Cadmium Content in the submitted sample.
2) To determine the Lead Content in the submitted sample.
3) To determine the Mercury Content in the submitted sample.
4) To determine the Hexavalent Chromium Content on the submitted sample.
5) To determine PBBs (polybrominated biphenyls) and PBDEs (Polybrominated diphenylethers) of the submitted sample.

Test Method :

1-3) With reference to EPA Method 3051/ 3052. Analysis was performed by Inductively Coupled Argon Plasma-Atomic Emission Spectrometry (ICP-AES).
4) With reference to EPA Method 3060A & 7196A. The sample was alkaline digested by using EPA Method 3060A, and then analyzed by using Colorimetric method 7196A (by UV-Vis Spectrophotometer).
5) With reference to EPA Method 3540C/ 3550C. Analysis was performed by GC/MS or LC/ MS.

Test Results : 1-5) Please refer to next page.

Signed for and on behalf of
SGS Hong Kong Ltd

Ho Ka Ting, Family
Laboratory Executive

This Test Report is issued by the Company subject to its General Conditions of Service printed overleaf. Attention is drawn to the limitations of liability, indemnification and jurisdictional issues defined therein. The results shown in this test report refer only to the sample(s) tested unless otherwise stated. This Test Report cannot be reproduced, except in full, without prior written permission of the Company.

SGS Hong Kong Ltd. 5/F - 8/F & 28/F -29/F, Metropole Square, 2 On Yiu Street, Siu Lek Yuen, Shatin, N.T., Hong Kong. t (852) 2334 4481-9 f (852) 2764 3126 www.hk.sgs.com
Member of the SGS Group (SGS SA)

© 2008 FOX ELECTRONICS | ISO9001:2000 Certified

3rd Party (SGS) Material Report (continued)

Test Report No. 2053204/EC Date : Mar 01 2006 Page 2 of 2

Test Results :

Test Item	1	Detection Limit
1) Cadmium (Cd)	ND	2 ppm
2) Lead (Pb)	ND	2 ppm
3) Mercury (Hg)	ND	2 ppm
4) Hexavalent Chromium (Cr^{6+})	ND	2 ppm

(Results shown are of the total weight of samples)

Note : ppm = mg/kg
ND = Not Detected
Not detected is reported when the reading is less than detection limit value

5)

Flame Retardants	1	Detection Limit
Polybrominated Biphenyls (PBBs)	---	---
Monobromobiphenyl	ND	5 ppm
Dibromobiphenyl	ND	5 ppm
Tribromobiphenyl	ND	5 ppm
Tetrabromobiphenyl	ND	5 ppm
Pentabromobiphenyl	ND	5 ppm
Hexabromobiphenyl	ND	5 ppm
Heptabromobiphenyl	ND	5 ppm
Octabromobiphenyl	ND	5 ppm
Nonabromobiphenyl	ND	5 ppm
Decabromobiphenyl	ND	5 ppm
Polybrominated Diphenylethers (PBDEs)	---	---
Monobromodiphenyl ether	ND	5 ppm
Dibromodiphenyl ether	ND	5 ppm
Tribromodiphenyl ether	ND	5 ppm
Tetrabromodiphenyl ether	ND	5 ppm
Pentabromodiphenyl ether	ND	5 ppm
Hexabromodiphenyl ether	ND	5 ppm
Heptabromodiphenyl ether	ND	5 ppm
Octabromodiphenyl ether	ND	5 ppm
Nonabromodiphenyl ether	ND	5 ppm
Decabromodiphenyl ether	ND	5 ppm

Note : ppm = mg/kg
ND = Not Detected
Not detected is reported when the reading is less than detection limit value.

Sample Description:
1. Black Ceramic w/ Silvery, Golden Metal w/ Silvery Chips

*** End of Report ***

This Test Report is issued by the Company subject to its General Conditions of Service printed overleaf. Attention is drawn to the limitations of liability, indemnification and jurisdictional issues defined therein. The results shown in this test report refer only to the sample(s) tested unless otherwise stated. This Test Report cannot be reproduced, except in full, without prior written permission of the Company.

SGS Hong Kong Ltd. 5/F - 8/F & 28/F -29/F, Metropole Square, 2 On Yiu Street, Siu Lek Yuen, Shatin, N.T., Hong Kong. t (852) 2334 4481-9 f (852) 2764 3126 www.hk.sgs.com
Member of the SGS Group (SGS SA)

© 2008 FOX ELECTRONICS | ISO9001:2000 Certified

Mechanical Testing

Parameter	Test Method
Mechanical Shock	Drop from 75cm to hardwood surface – 3 times
Mechanical Vibration	10~55Hz, 1.5mm amplitude, 1 Minute Sweep 2 Hours each in 3 Directions (X, Y, Z)
High Temperature Burn-in	Under Power @ 125°C for 2000 Hours (results below)
Hermetic Seal	He pressure: 4 ±1 kgf / cm^2 2 Hour soak

2,000 Hour Burn-In

Burn-In Testing – under power 2000 Hours, 125°C

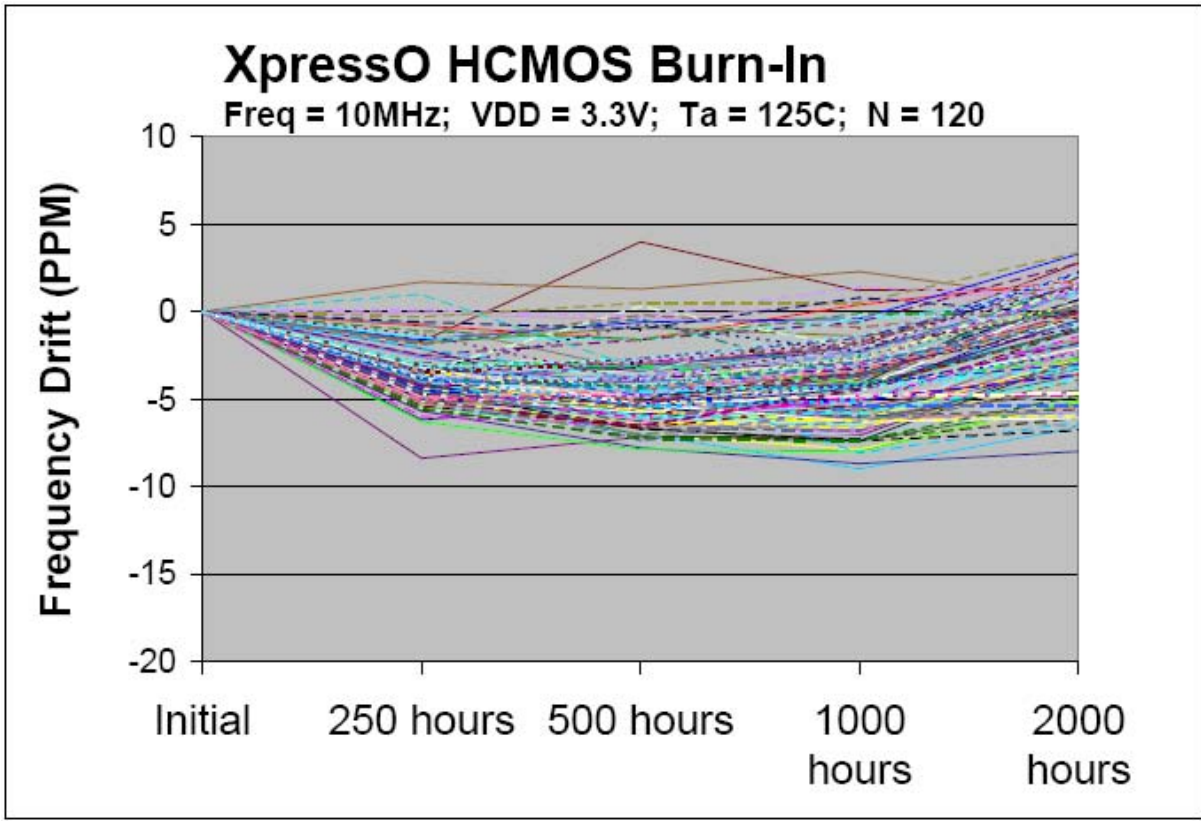

© 2008 FOX ELECTRONICS | ISO9001:2000 Certified

MTTF / FITS Calculations

Products are grouped together by process for MTTF calculations.
(All XpressO output and package types are manufactured with the same process)

Number of Parts Tested: 360 (120 of each output type: HCMOS, LVDS, LVPECL)
Number of Failures: 0
Test Temperature: 125°C
Number of Hours: 2000

MTTF was calculated using the following formulas:

[1.] Device Hours (*devhrs*) = (number of devices) x (hours at elevated temperature in °K)

[2.] $MTTF = \frac{devhrs \times af \times 2}{\chi^2}$

[3.] FITS = $\frac{1}{MTTF} * 10^9$

Where:

Label	*Name*	*Formula/Value*
af	Acceleration Factor	$e^{(\frac{eV}{k})\times(\frac{1}{t_1}-\frac{1}{t_2})}$
eV	Activation Energy	0.40 V
k	Bolzman's Constant	8.62 X 10^{-5} *eV*/°K
t_1		Operating Temperature (°K)
t_2		Accelerated Temperature (°K)
Θ	Theta	Confidence Level (60% industry standard)
r	Failures	Number of failed devices
χ^2	Chi-Square	statistical significance for bivariate tabular analysis [table look-up] based on assumed Θ (Theta – confidence) and number of failures (r) For zero failures (60% Confidence): χ^2 = 1.830

DEVICE-HOURS = 360 x 2000 HOURS = 720,000

ACCELERATION FACTOR = $e^{(\frac{0.40}{8.625})\times(\frac{1}{298}-\frac{1}{398})}$ = 49.91009

MTTF = $\frac{720{,}000 \times 49.91009 \times 2}{1.833}$ = 15,607,065 Hours

Failure Rate = $\frac{1.833}{720{,}000 \times 49.91009 \times 2}$ = 6.41E-8

FITS = Failure Rate *1E9 = 64

© 2008 FOX ELECTRONICS | ISO9001:2000 Certified

Notes :

Other XPRESSO Links

XPRESSO Brochure

Crystal Oscillators
HCMOS 5 x 3.2mm 3.3V XO 0.75 to 250MHz
HCMOS 7 x 5mm 3.3V XO 0.75 to 250MHz
LVPECL 5 x 3.2mm 3.3V XO 0.75 to 1.35GHz
LVPECL 7 x 5mm 3.3V XO 0.75 to 1.35GHz
LVDS 5 x 3.2mm 3.3V XO 0.75 to 1.35GHz
LVDS 7 x 5mm 3.3V XO 0.75 to 1.35GHz
Voltage Controlled Crystal Oscillators
HCMOS 5 x 3.2mm 3.3V VCXO 0.75 to 250MHz
HCMOS 7 x 5mm 3.3V VCXO 0.75 to 250MHz
LVPECL 5 x 3.2mm 3.3V VCXO 0.75 to 1.35GHz
LVPECL 7 x 5mm 3.3V VCXO 0.75 to 1.35GHz
LVDS 5 x 3.2mm 3.3V VCXO 0.75 to 1.35GHz
LVDS 7 x 5mm 3.3V VCXO 0.75 to 1.35GHz

Main Website www.foxonline.com

Patent Numbers:
US 6,664,860, US 5,960,403, US 5,952,890; US 5,960,405; US 6,188,290;
Foreign Patents: R.S.A. 98/0866, R.O.C. 120851; Singapore 67081, 67082; EP 0958652
China ZL 98802217.6, Malaysia MY-118540-A, Philippines 1-1998-000245, Hong Kong #HK1026079, Mexico #232179
US and Foreign Patents Pending
XpressO™ Fox Electronics

Contact Information

(USA)-Worldwide Headquarters
Tel: 888-GET-2-FOX
Outside US: +1.239.693.0099,
Fax:+1.239.693.1554
Email: www.foxonline.com/email.htm

Fox EMEA
Tel/Fax: +44 1283 568153
Email: www.foxonline.com/email.htm

Fox Taiwan
Tel:+886-2-22073427,
Fax:+886-2-22073486
Email: www.foxonline.com/email.htm

The above specifications, having been carefully prepared and checked, is believed to be accurate at the time of publication; however, no responsibility is assumed by Fox Electronics for inaccuracies.

© 2008 FOX ELECTRONICS | ISO9001:2000 Certified