Excellent Integrated System Limited

Stocking Distributor

Click to view price, real time Inventory, Delivery & Lifecycle Information:

Wurth Electronics Inc
744873002

For any questions, you can email us directly:
sales@integrated-circuit.com

Spezifikation für Freigabe / specification for release

Kunde / customer :
Artikelnummer / part number : **744873002**
Bezeichnung : **DOPPELDROSSEL WE-DD**
description : **POWER-CHOKE WE-DD**

compliant RoHS WÜRTH ELEKTRONIK

WÜRTH ELEKTRONIK

DATUM / DATE : 2009-11-01

A Mechanische Abmessungen / dimensions:

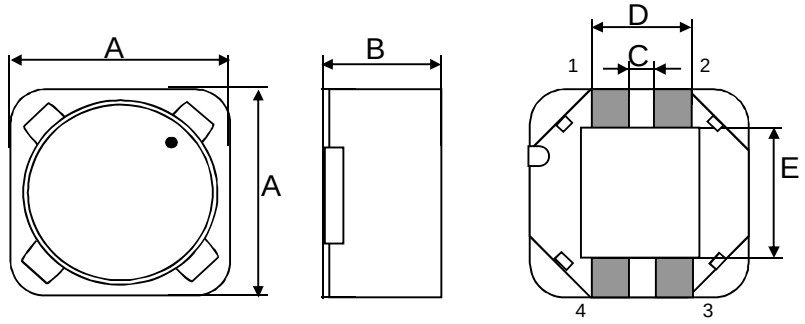

	Typ XL	
A	**12,5 max.**	mm
B	**8,5 max.**	mm
C	**1,5 ± 0,2**	mm
D	**4,9 ± 0,2**	mm
E	**7,3 ± 0,5**	mm

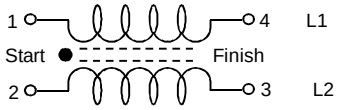

B Elektrische Eigenschaften / electrical properties:

Eigenschaften / properties	Testbedingungen / test conditions		Wert / value	Einheit / unit	tol.
Induktivität (je Wicklg.) / inductance (each wdg.)	**100 kHz / 5mA**	L_1, L_2	**2,4**	µH	**±20%**
DC-Widerstand (je Wicklg.) / DC-resistance (each wdg.)	**@ 20°C**	$R_{DC1,2\ typ}$	**12,5**	mΩ	**typ.**
DC-Widerstand (je Wicklg.) / DC-resistance (each wdg.)	**@ 20°C**	$R_{DC1,2\ max}$	**16,0**	mΩ	**max.**
Nennstrom (je Wicklg.) (1) / rated Current (each wdg.) (1)	**ΔT = 40 K**	I_{N1}, I_{N2}	**6,00**	A	**max.**
Sättigungsstrom (je Wicklg.) / saturation current (each wdg.)	**ΔL/Lo = -10%**	I_{sat}	**14,00**	A	**typ.**
Eigenres.-Frequenz (2) / self-res.-frequency (2)		SRF	**54,00**	MHz	**typ.**
Nennspannung / rated voltage		U_{DC}	**80,0**	V	**max.**

(1) both windings driven by rated current will occur ΔT / Stromfluss durch beide Wicklungen verursachen ΔT

(2) both windings in parallel / beide Wicklungen parallel

C Lötpad / soldering spec.:

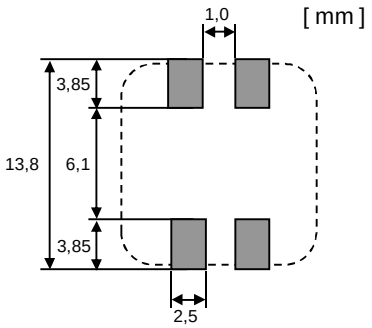

D Prüfgeräte / test equipment:

WK 3260B für/for L und/and I_{DC}
GMC Metrahit 27I für/for R_{DC}
HP E4991A für/for SRF

E Testbedingungen / test conditions:

Luftfeuchtigkeit / humidity:	33%
Umgebungstemperatur / temperature:	+20°C

F Werkstoffe & Zulassungen / material & approvals:

Basismaterial / base material:	Ferrit/ ferrite
Draht / wire:	2 SFHW; 180°C
UL-File Number:	E174837

G Eigenschaften / general specifications:

Betriebstemp. / operating temperature: -40°C - + 125°C
Umgebungstemp. / ambient temperature: -40°C - + 85°C
It is recommended that the temperature of the part does not exceed 125°C under worst case operating conditions.

Freigabe erteilt / general release:

Kunde / customer	Würth Elektronik
Datum / date	Unterschrift / signature
Geprüft / checked	Kontrolliert / approved

Name	Änderung / modification	Datum / date
OO	Version 1	09-11-01

Würth Elektronik eiSos GmbH & Co. KG
D-74638 Waldenburg · Max-Eyth-Strasse 1 · Germany · Telefon (+49) (0) 7942 - 945 - 0 · Telefax (+49) (0) 7942 - 945 - 400
http://www.we-online.de

Spezifikation für Freigabe / specification for release

Kunde / customer :

Artikelnummer / part number : **744873002**

Bezeichnung : **DOPPELDROSSEL WE-DD**

description : **POWER-CHOKE WE-DD**

DATUM / DATE : 2009-11-01

H Induktivitätskurve / Inductance curve:

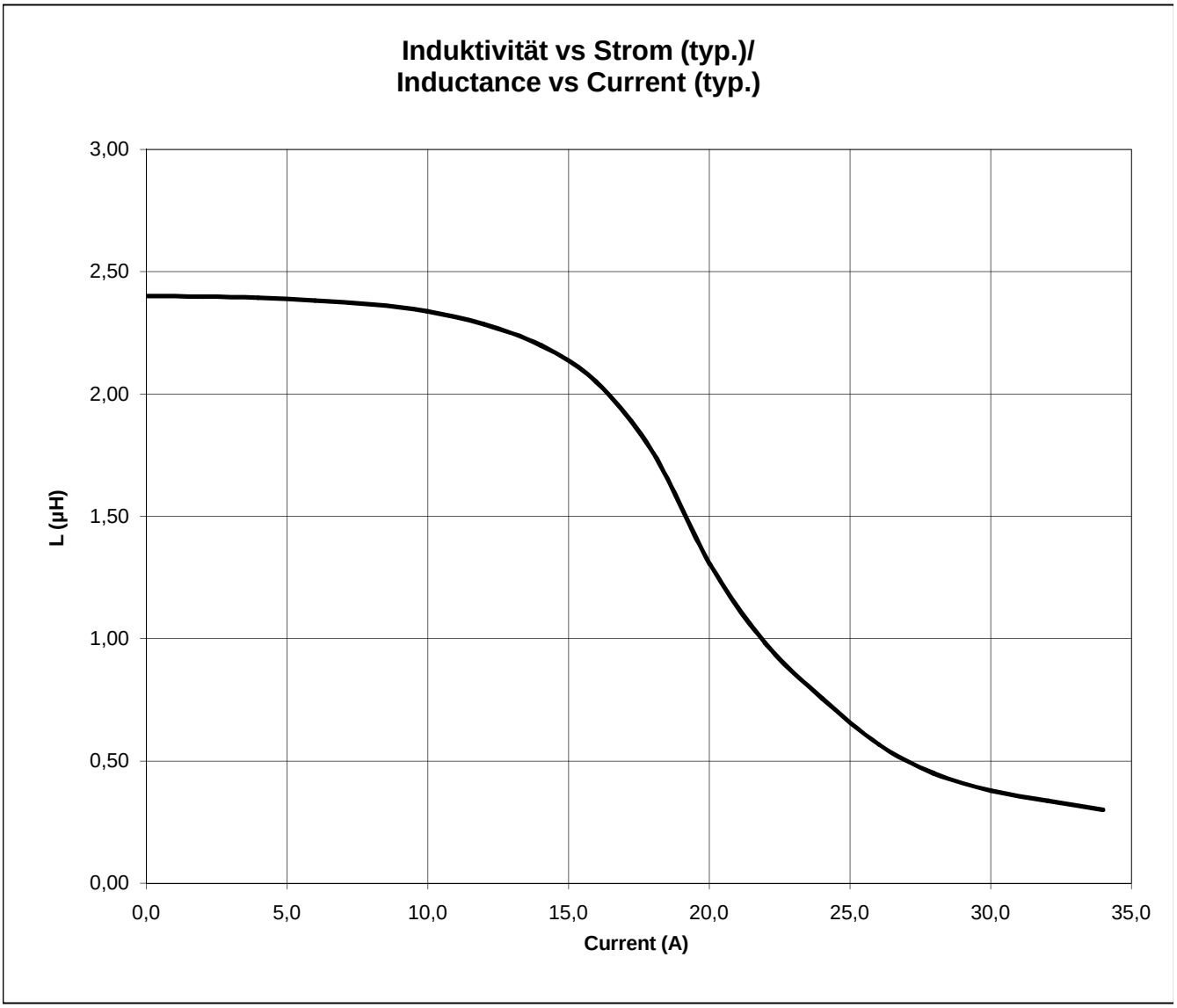

Freigabe erteilt / general release:	**Kunde / customer**			
.....	.....			
Datum / date	Unterschrift / signature			
	Würth Elektronik			
.....	.....	OO	Version 1	09-11-01
Geprüft / checked	Kontrolliert / approved	Name	**Änderung / modification**	Datum / date

Spezifikation für Freigabe / specification for release

Kunde / customer :

Artikelnummer / part number : **744873002**

Bezeichnung : **DOPPELDROSSEL WE-DD**

description : **POWER-CHOKE WE-DD**

DATUM / DATE : 2009-11-01

I Rollenspezifikation / tape and reel specification:

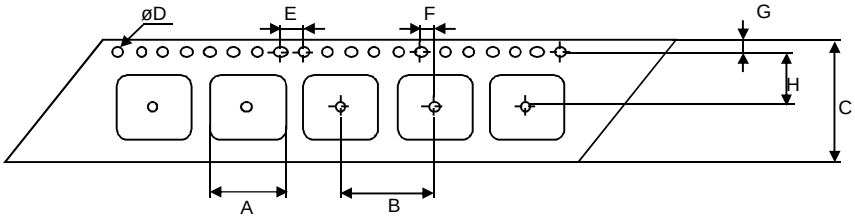

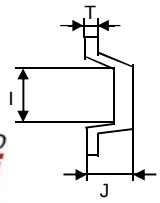

Gurtspezifikation / Tape specification:		
A	**12,5 ± 0,1**	mm
B	**16,0 ± 0,1**	mm
C	**24,0 ± 0,3**	mm
D	**1,50 $^{+0,1}_{-0,0}$**	mm
E	**4,00 ± 0,1**	mm
F	**2,00 ± 0,1**	mm
G	**1,75 ± 0,1**	mm
H	**11,5 ± 0,1**	mm
I	**12,6 ± 0,1**	mm
J	**8,50 ± 0,1**	mm
T	**0,40 ± 0,05**	mm

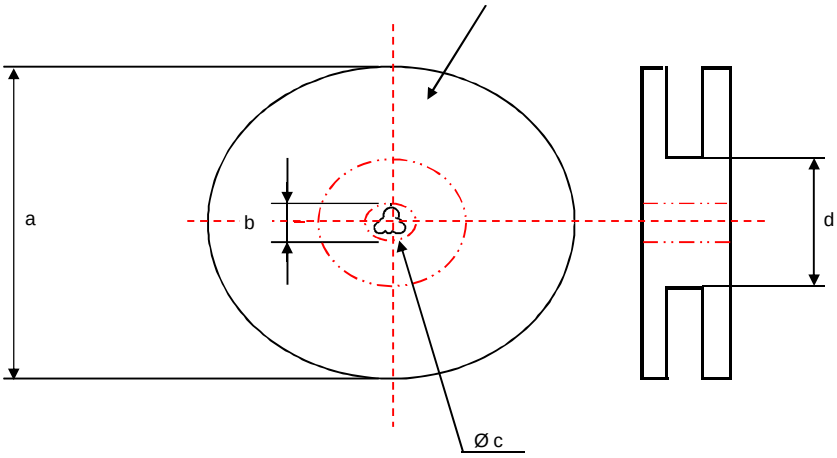

Rollenspezifikation / Reel specification:		
a	**330,0 ± 2,0**	mm
b	**21,00 ± 0,8**	mm
c	**13,00 ± 0,5**	mm
d	**100,0 ± 1,0**	mm

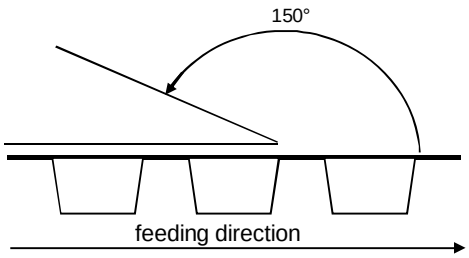

The force for tearing off cover tape is 20 to 70 grams in arrow direction

Freigabe erteilt / general release:	Kunde / customer			
.....	.....			
Datum / date	Unterschrift / signature			
	Würth Elektronik			
.....	.....	OO	Version 1	09-11-01
Geprüft / checked	Kontrolliert / approved	Name	**Änderung / modification**	Datum / date

This electronic component has been designed and developed for usage in general electronic equipment. Before incorporating this component into any equipment where higher safety and reliability is especially required or if there is the possibility of direct damage or injury to human body, for example in the range of aerospace, aviation, nuclear control, submarine, transportation, (automotive control, train control, ship control), transportation signal, disaster prevention, medical, public information network etc, Würth Elektronik eiSos GmbH must be informed before the design-in stage. In addition, sufficient reliability evaluation checks for safety must be performed on every electronic component which is used in electrical circuits that require high safety and reliability functions or performance.

Würth Elektronik eiSos GmbH & Co. KG
D-74638 Waldenburg · Max-Eyth-Strasse 1 · Germany · Telefon (+49) (0) 7942 - 945 - 0 · Telefax (+49) (0) 7942 - 945 - 400
http://www.we-online.de