Excellent Integrated System Limited

Stocking Distributor

Click to view price, real time Inventory, Delivery & Lifecycle Information:

Bel Fuse Inc.
SI-52001-F

For any questions, you can email us directly:
sales@integrated-circuit.com

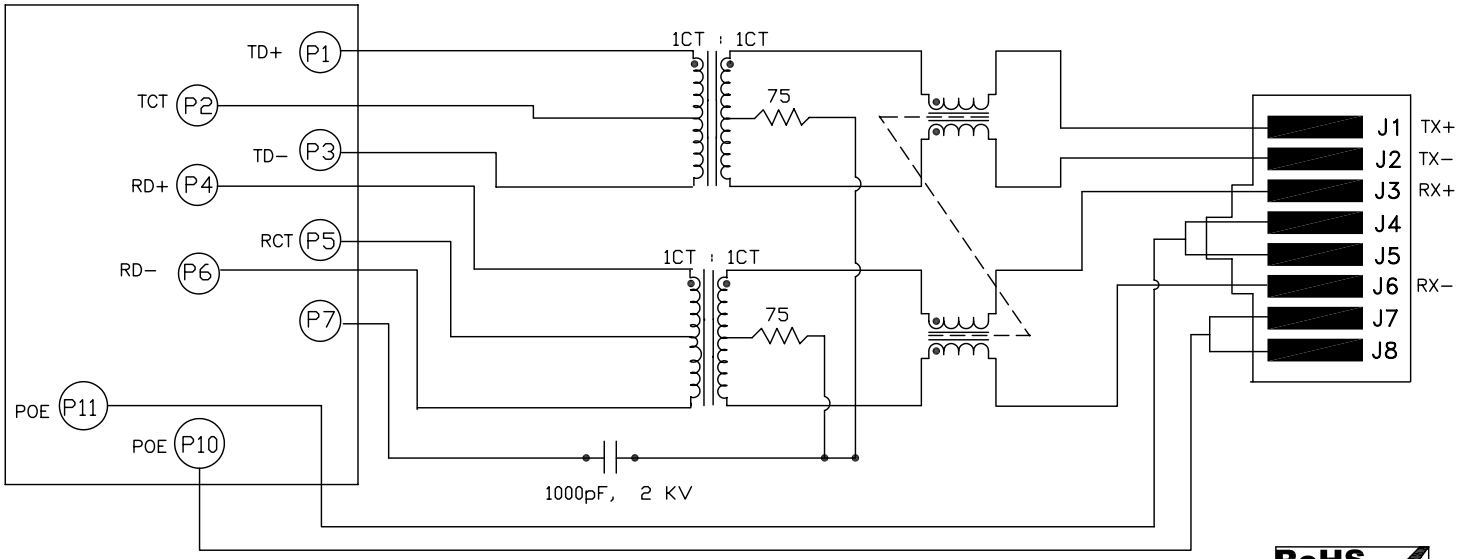

RoHS 2002/95/EC

ELECTRICAL SPECIFICATIONS:

1.0 TURNS RATIO: (P1−P3) : (J1−J2) : 1CT : 1CT ± 2%
(P4−P6) : (J3−J6) : 1CT : 1CT ± 2%

Bel Stewart Connector
11118 Susquehanna Trail, South
Glen Rock, Pa 17327-9199
717.234.7512

MagJack®
http://www.stewartconnector.com

THIS DRAWING AND THE SUBJECT MATTER SHOWN THEREON ARE CONFIDENTIAL AND PROPERTY OF BEL STEWART CONNECTOR AND SHALL NOT BE REPRODUCED, COPIED, OR USED IN ANY MANNER WITHOUT PRIOR WRITTEN CONTENT OF BEL STEWART CONNECTOR. THE SUBJECT MATTER MAY BE PATENTED OR A PATENT MAY BE PENDING.

SHEET	DRAWING NO.	REV.
1 OF 4	SI−52001−F	05

ELECTRICAL SPECIFICATIONS:

2.0 DC RESISTANCE:	(P1–P3); (P4–P6)	: 1.2 OHMS
	(J1–J2); (J3–J6)	: 1.2 OHMS
3.0 INDUCTANCE:	(P1–P3)	: 350uH MIN. @ 0.1V, 100KHz, 8mA DC Bias
	(P4–P6)	: 350uH MIN. @ 0.1V, 100KHz, 8mA DC Bias

4.0 RETURN LOSS: (P1–P3)=100 OHMS REF. AND (P4–P6)=100 OHM REF.

1MHz TO 30MHz	: 18dB MIN.
30MHz TO 80MHz	: 12dB MIN.

5.0 INSERTION LOSS:	RS & RL =100 ohms	
	1MHz TO 100MHz	: 1.1 dB TYP
6.0 CROSS TALK:	1MHz – 100 MHz	: 35 dB TYP

7.0 DIFFERNTIAL TO COMMON MODE ATTENUATION:

1MHz TO 100MHz	: 40dB TYP

8.0 DIELECTRIC WITHSTAND:	(P1–P3) TO (J1–J2)	: 2000 DC
	(P4–P6) TO (J3–J6)	: 2000 DC

9.0 CAPABLE OF SUPPORTING 30W OVER UNUSED PAIRS

Bel Stewart Connector
11118 Susquehanna Trail, South
Glen Rock, Pa 17327-9199
717.234.7512
http://www.stewartconnector.com

THIS DRAWING AND THE SUBJECT MATTER SHOWN THEREON ARE CONFIDENTIAL AND PROPERTY OF BEL STEWART CONNECTOR AND SHALL NOT BE REPRODUCED, COPIED, OR USED IN ANY MANNER WITHOUT PRIOR WRITTEN CONTENT OF BEL STEWART CONNECTOR. THE SUBJECT MATTER MAY BE PATENTED OR A PATENT MAY BE PENDING.

LED SPECIFICATION			
STANDARD LED	WAVELENGTH	FOWARD V (MAX)	* (TYP)
GREEN	565 nm	2.5 V	2.2 V

*WITH A FORWARD CURRENT OF 20 mA (TYP)

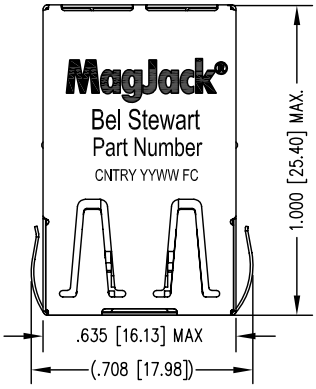

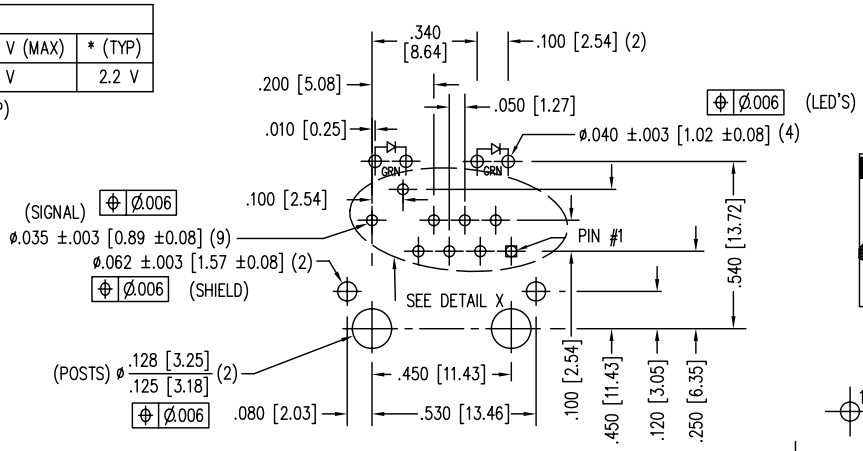

P.C.B. RECOMMENDED HOLE LAYOUT
SEEN FROM COMPONENT SIDE

ALL CENTERLINE DIMENSIONS ARE BASIC.

RoHS 2002/95/EC

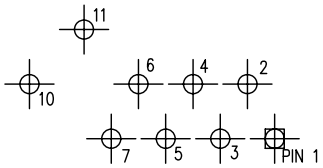

DETAIL X

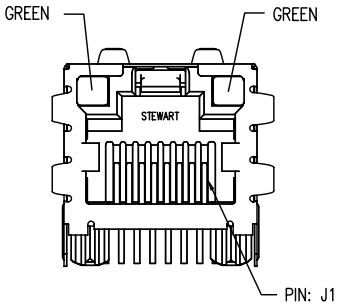

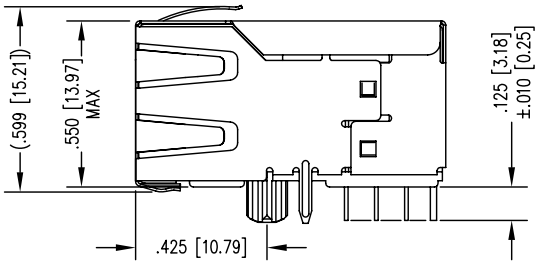

NOTES:

1. CONNECTOR MATERIALS:
   HOUSING: THERMOPLASTIC UL94 V-0
   CONTACT/SHIELD: COPPER ALLOY
   SHIELD PLATING: NICKEL OR TIN
   CONTACT PLATING: SELECTIVE GOLD,
   50 MICRO-INCHES MIN. IN CONTACT AREA.
2. PIN NOT ELECTRICALLY CONNECTED MAYBE OMITTED.
   SEE ELECTRICAL DRAWING FOR OMITTED PINS.
3. TOLERANCES COMPLY WITH F.C.C. DIMENSION REQUIREMENTS.
4. ALL TOLERANCES NOT OTHERWISE SPECIFIED TO BE ±.005 [0.13]
5. WAVE SOLDER COMPATIBLE – PREHEAT 125°C/90SECS.

Bel Stewart Connector
11118 Susquehanna Trail, South
Glen Rock, Pa 17327-9199
717.234.7512
MagJack
http://www.stewartconnector.com

THIS DRAWING AND THE SUBJECT MATTER SHOWN THEREON ARE CONFIDENTIAL AND PROPERTY OF BEL STEWART CONNECTOR AND SHALL NOT BE REPRODUCED, COPIED, OR USED IN ANY MANNER WITHOUT PRIOR WRITTEN CONTENT OF BEL STEWART CONNECTOR. THE SUBJECT MATTER MAY BE PATENTED OR A PATENT MAY BE PENDING.

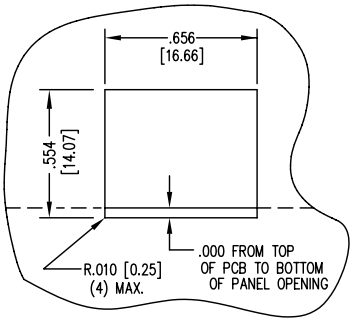

SUGGESTED PANEL OPENING

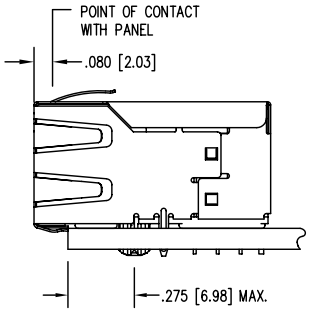

1. THE SUGGESTED PANEL OPENING IS INTENDED TO GIVE THE USER THE ABILITY TO HAVE REASONABLE JACK / PANEL CLEARANCES YET MAINTAIN RELIABLE GROUNDING CAPABILITY.
2. ALL TOLERANCES NOT OTHERWISE SPECIFIED TO BE ±.005 [0.13]

Bel Stewart Connector
11118 Susquehanna Trail, South
Glen Rock, Pa 17327-9199
717.234.7512
http://www.stewartconnector.com

MagJack®

THIS DRAWING AND THE SUBJECT MATTER SHOWN THEREON ARE CONFIDENTIAL AND PROPERTY OF BEL STEWART CONNECTOR AND SHALL NOT BE REPRODUCED, COPIED, OR USED IN ANY MANNER WITHOUT PRIOR WRITTEN CONTENT OF BEL STEWART CONNECTOR. THE SUBJECT MATTER MAY BE PATENTED OR A PATENT MAY BE PENDING.

SHEET	DRAWING NO.	REV.
4 OF 4	SI-52001-F	01