Excellent Integrated System Limited

Stocking Distributor

Click to view price, real time Inventory, Delivery & Lifecycle Information:

Hammond Manufacturing
290JX

For any questions, you can email us directly:
sales@integrated-circuit.com

290JX

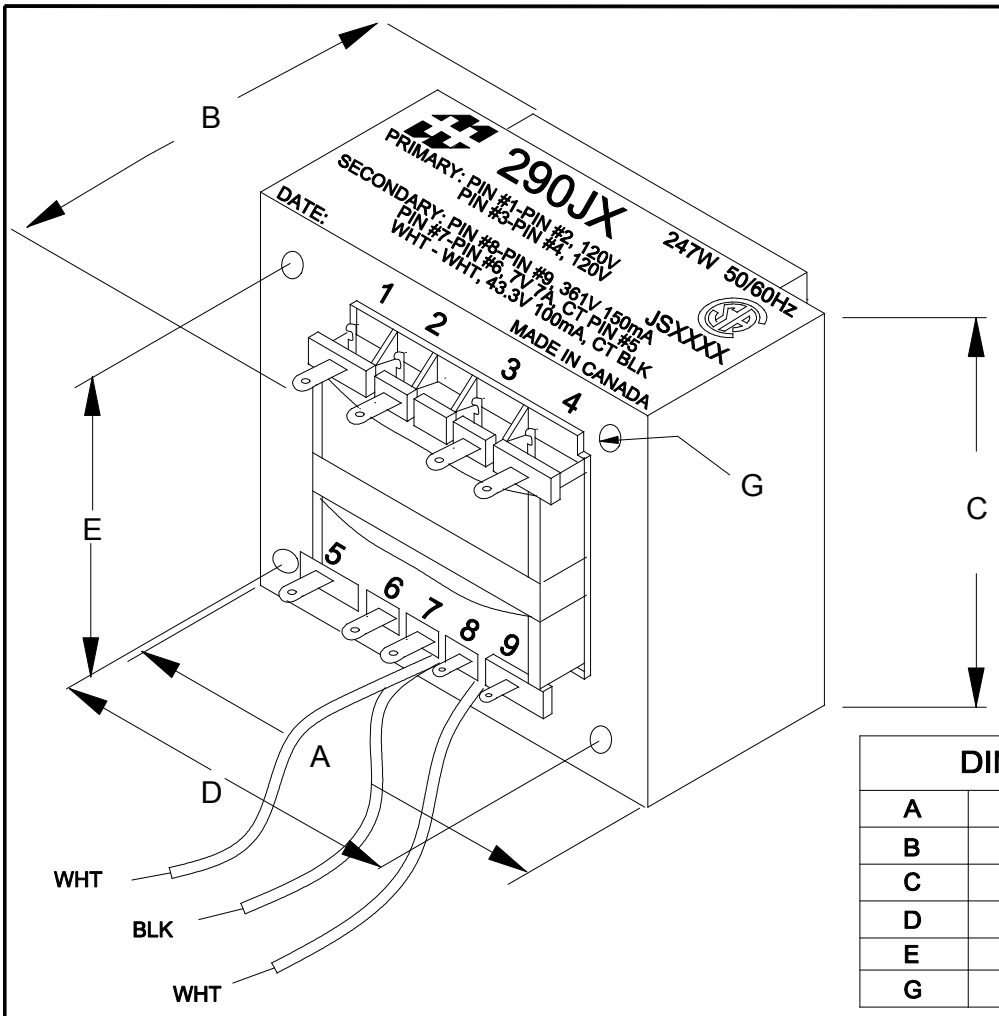

DIMENSIONS:	
A	3.760" ±0.063
B	3.980" ±0.125
C	3.130" ±0.063
D	3.148" ±0.125
E	2.521" ±0.063
G	0.215" ±0.010

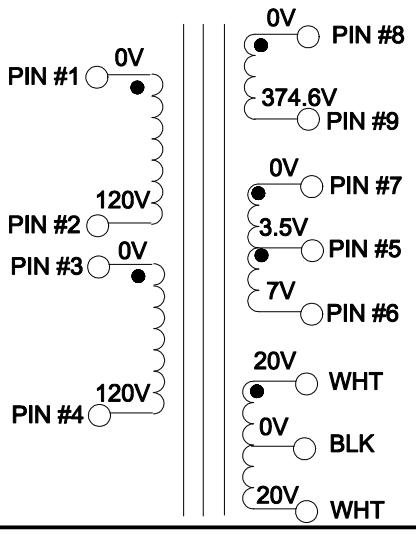

ELECTRICAL DATA:		
Turns ratio:	1 : 3.12 (PIN8 - PIN9)	
Exciting Current	@ 120V, 60Hz, Pin 1 - Pin 2 = 200mA	Max.
DCR	@ 25C, Pin 1 - Pin 2 =2.18 Ω	±20%
	@ 25C, Pin 3 - Pin 4 =2.495Ω	±20%
	@ 25C, Pin 5 - Pin 6 =14.9 Ω	±20%
	@ 25C, Pin 7 - Pin 9 =0.02 Ω	±20%
	@ 25C, WHT - WHT =4.02 Ω	±20%
Pri. Voltage	120V / 120V 50/60Hz	
Sec. Voltage (RMS)	361V @ 150mA / 43.3VCT @ 100mA / 7VCT @ 7A	
No Load Voltage	374.6V / 45VCT / 7.3VCT	

HAMMOND
MANUFACTURING
52 RANKIN PLACE,
WATERLOO, ONTARIO, N2L 3Z5.
PHONE (519) 886-6181
FAX # (519) 886-9540
WWW.HAMMONDMFG.COM

TITLE
POWER TRANSFORMER

NO	DATE	REVISION		DR BY SAID MANSOUR
1	08/11/09	PRELIMINARY.	S.M.	DATE 04/11/08
				DIM IN(X)MM( )

290JX