Excellent Integrated System Limited

Stocking Distributor

Click to view price, real time Inventory, Delivery & Lifecycle Information:

Hammond Manufacturing
290FEX

For any questions, you can email us directly:
sales@integrated-circuit.com

290FEX

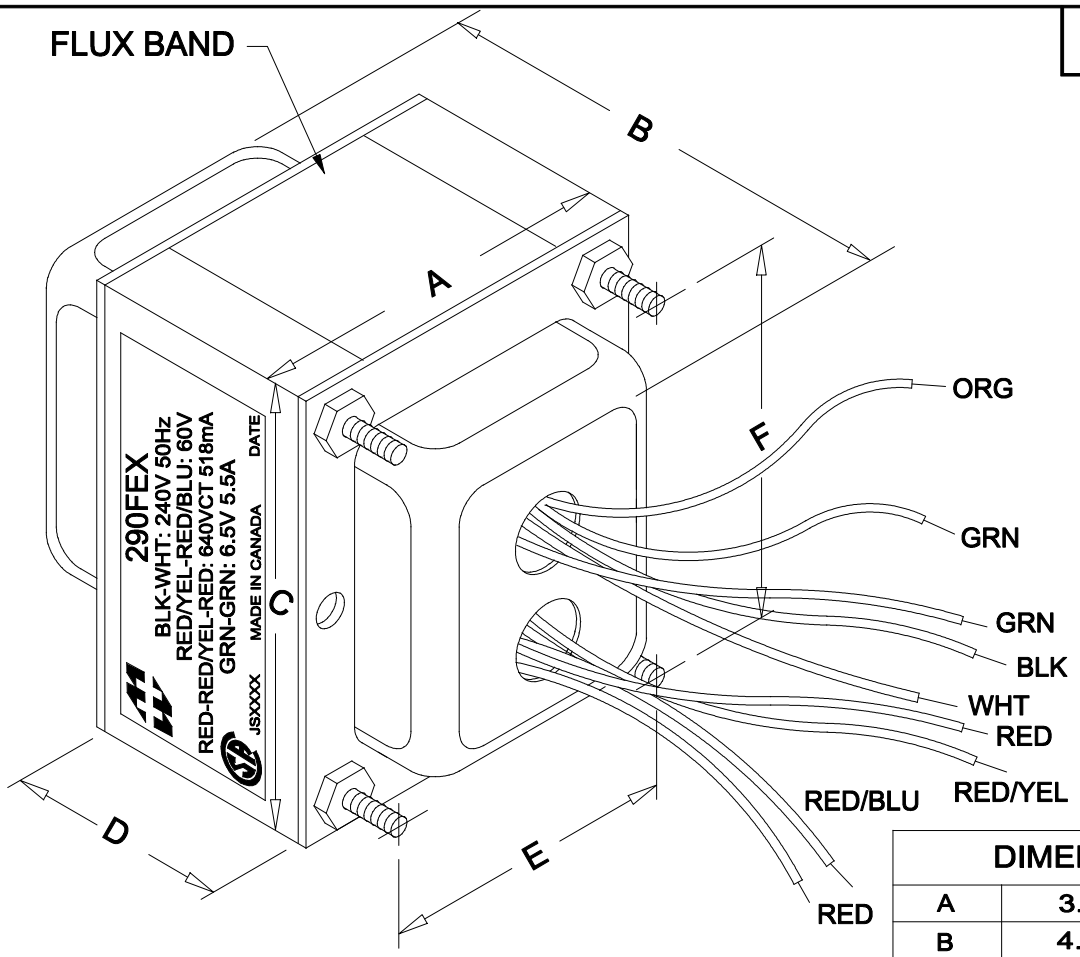

NOTE: ALL LEADS 9" OUT MIN., STRIPPED .5"

DIMENSIONS:	
A	3.750" ±0.063
B	4.690" ±0.125
C	4.500" ±0.063
D	2.370" ±0.063
E	3.000" ±0.063
F	3.750" ±0.063

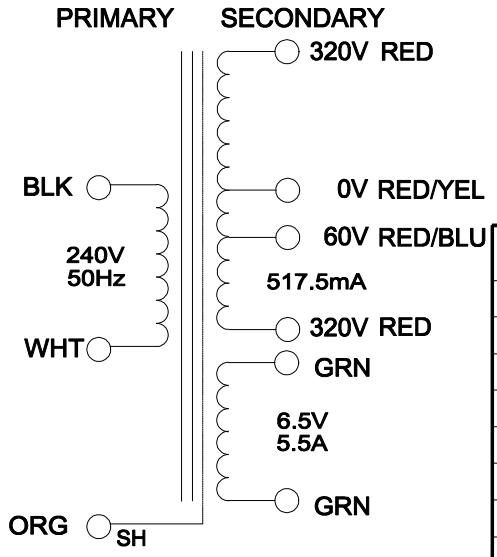

ELECTRICAL DATA:		
Turns ratio:	1 : 2.77 (RED - RED)	
Exciting Current	@ 240V, 50Hz, BLK - WHT = 255mA	Max.
DCR	@ 20C, WHT - BLK =3.161 Ω	±20%
	@ 20C, RED - RED =20.19 Ω	±20%
	@ 20C, GRN - GRN =0.074 Ω	±20%
Pri. Voltage	240V 50Hz	
Sec. Voltage (RMS)	640VCT @ 518mA C/W 60V TAP, 6.5V @ 5.5A	
No Load Voltage	665.26VCT/ 7.02V	

HAMMOND ELECTRONICS
52 RANKIN PLACE,
WATERLOO, ONTARIO, N2L 3Z5.
PHONE (519) 886-6181
FAX # (519) 886-9540

TITLE Power Transformer

NO	DATE	REVISION	DIM IN(X)MM( )
			DR BY IOAN POP
1	08/11/09	RELEASED	DATE 05/12/09

290FEX