Excellent Integrated System Limited

Stocking Distributor

Click to view price, real time Inventory, Delivery & Lifecycle Information:

Molex Connector Corporation
0461141212

For any questions, you can email us directly:
sales@integrated-circuit.com

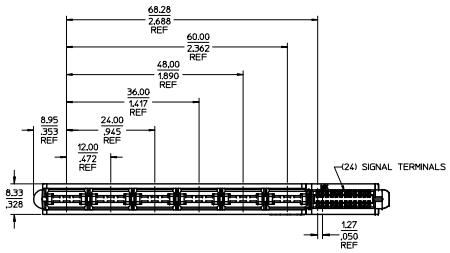

NO OF SIGNALS	MATERIAL NUMBER	COMPLIANT PIN PLATING	DIM A	DIM B	DIM C
12	46114-1212	TIN	89.01/3.504	89.51/3.524	5.45/.215
16	46114-1216	TIN	91.55/3.604	92.05/3.624	
20	46114-1220	TIN	94.09/3.704	94.59/3.724	
24	46114-1224	TIN	96.63/3.804	97.13/3.824	
28	46114-1228	TIN	99.17/3.904	99.67/3.924	
32	46114-1232	TIN	101.71/4.004	102.21/4.024	
36	46114-1236	TIN	104.25/4.104	104.75/4.124	
40	46114-1240	TIN	106.79/4.204	107.29/4.224	

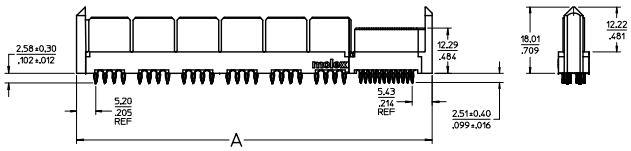

NOTES:
1. MATERIAL: HOUSING: LCP, 94-V0, COLOR: BLACK.
POWER CONTACTS: COPPER ALLOY.
SIGNAL CONTACTS: MODIFIED TIN BRASS.
2. FINISH: SELECT GOLD - 0.75 µM/30 µ INCHES
SELECTED TIN - 2.50 µM/100 µ INCHES
BOTH OVER NICKEL - 1.25 µM/50 µ INCHES
3. POWER TERMINALS ARE LUBRICATED IN CONTACT AREA.
4. PARTS ARE RoHS COMPLIANT.
5. MATES TO MOLEX P/N 45985-SERIES OR EDGE CARD 1.57/.062.
6. PRODUCT SPECIFICATION PS-46114-001.
7. PACKAGING: PER PK-46114-003.

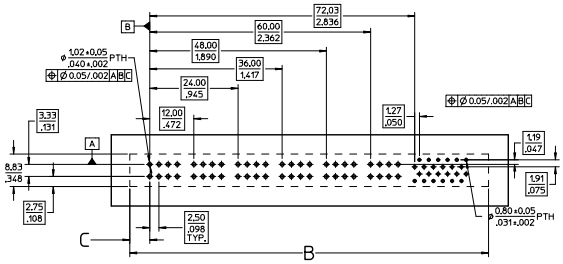

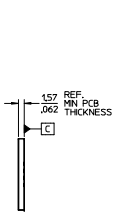

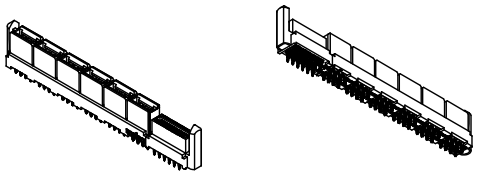

MATERIAL # 46114-1224
SHOWN

REV	DESCRIPTION	DATE
E	REVISE CARD EDGE E.C. NO: UCP2015-0571 DRWN:MBANDURA CHKD: APPR:APATEL	2015/03/12 2015/04/20

QUALITY SYMBOLS: ▼=0, ▽=0

GENERAL TOLERANCES (UNLESS SPECIFIED)

	mm	INCH
4 PLACES	± ---	± ---
3 PLACES	± ---	± .010
2 PLACES	± 0.25	± ---
1 PLACE	± ---	± ---
ANGULAR ±1/2°		

DRAFT WHERE APPLICABLE MUST REMAIN WITHIN DIMENSIONS

DIMENSION STYLE: MM/IN
SCALE: 2:1
DESIGN UNITS: METRIC
THIRD ANGLE PROJECTION

		DATE
DRAWN BY	MKARADIMAS	2007/07/18
CHECKED BY	APATEL	2007/07/20
APPROVED BY	JCOMERCI	2009/12/03

TITLE: LPH VERTICAL RECEPTACLE COMPLIANT PIN ASSEMBLY 12CKT PWR CON, PRESS FIT

MOLEX INCORPORATED

MATERIAL NO.: SEE CHART
DOCUMENT NO.: SD-46114-120
SHEET NO.: 1 OF 3
SIZE: D

THIS DRAWING CONTAINS INFORMATION THAT IS PROPRIETARY TO MOLEX INCORPORATED AND SHOULD NOT BE USED WITHOUT WRITTEN PERMISSION

fb_frame_D_P_AM_T
Rev. E 2006/04/15

Distributor of Molex Connector Corporation: Excellent Integrated System Limited
Datasheet of 0461141212 - CONN RCPT VERT 12 PWR 12 SGL
Contact us: sales@integrated-circuit.com Website: www.integrated-circuit.com

NO OF SIGNALS	MATERIAL NUMBER	COMPLIANT PIN PLATING	DIM A	DIM B	DIM C
12	46114-1213	TIN	83.34/3.281	84.84/3.301	2.69/.106
16	46114-1217	TIN	85.88/3.381	86.38/3.401	
20	46114-1221	TIN	88.42/3.481	88.92/3.501	
24	46114-1225	TIN	90.96/3.581	91.46/3.601	
28	46114-1229	TIN	93.50/3.681	94.00/3.701	
32	46114-1233	TIN	96.04/3.781	96.54/3.801	
36	46114-1237	TIN	98.58/3.881	99.08/3.901	
40	46114-1241	TIN	101.12/3.981	102.62/4.001	

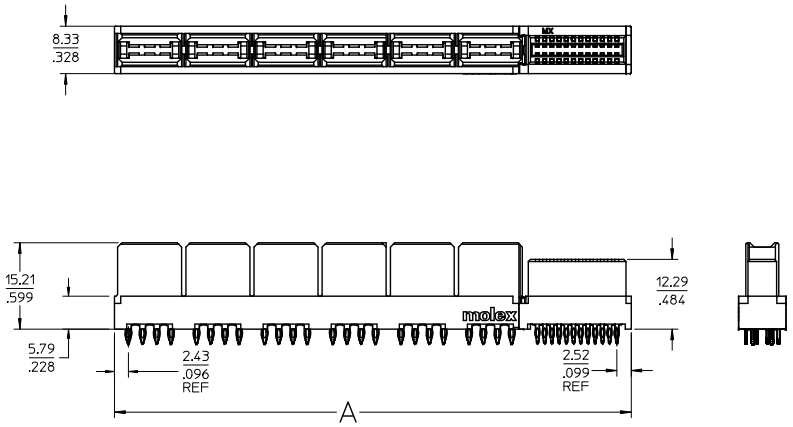

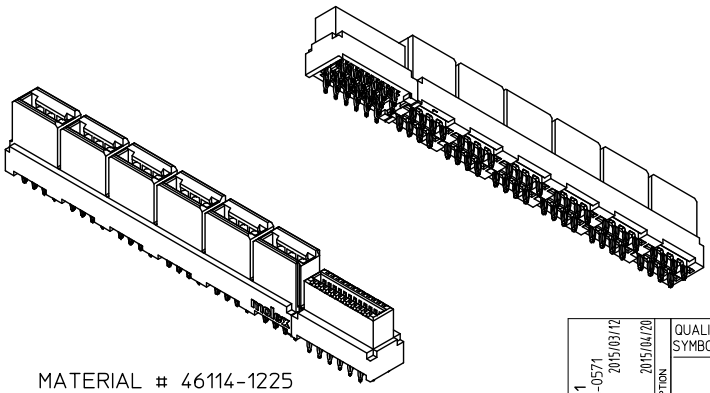

MATERIAL # 46114-1225
SHOWN

SEE SHEET 1			
EC NO: UCP2015-0571	2015/03/12		
DRWN:MBANDURA	2015/04/20		
CH'KD:			
APPR:APATEL			
REV	DESCRIPTION		

QUALITY SYMBOLS

GENERAL TOLERANCES (UNLESS SPECIFIED)

	mm	INCH
4 PLACES	± ---	± ---
3 PLACES	± ---	± .010
2 PLACES	± 0.25	± ---
1 PLACE	± ---	± ---
ANGULAR ±1/2°		

DRAFT WHERE APPLICABLE MUST REMAIN WITHIN DIMENSIONS

DIMENSION STYLE: MM/IN
SCALE: 2:1
DESIGN UNITS: METRIC
THIRD ANGLE PROJECTION

		DATE
DRAWN BY	MKARADIMAS	2007/07/18
CHECKED BY	APATEL	2007/07/20
APPROVED BY	JCOMERCI	2009/12/03

TITLE: LPH VERTICAL RECEPTACLE COMPLIANT PIN ASSEMBLY 12CKT PWR CON, PRESS FIT

molex MOLEX INCORPORATED

MATERIAL NO.: SEE CHART
DOCUMENT NO.: SD-46114-120
SHEET NO.: 2 OF 3
SIZE: C

THIS DRAWING CONTAINS INFORMATION THAT IS PROPRIETARY TO MOLEX INCORPORATED AND SHOULD NOT BE USED WITHOUT WRITTEN PERMISSION

tb_frame_C_P_AM_T
Rev. E 2006/04/15

Distributor of Molex Connector Corporation: Excellent Integrated System Limited
Datasheet of 0461141212 - CONN RCPT VERT 12 PWR 12 SGL
Contact us: sales@integrated-circuit.com Website: www.integrated-circuit.com

NO OF SIGNAL	DIM. D
12	8.00/.315
16	10.54/.415
20	13.08/.515
24	15.62/.615
28	18.16/.715
32	20.70/.815
36	23.24/.915
40	25.78/1.015

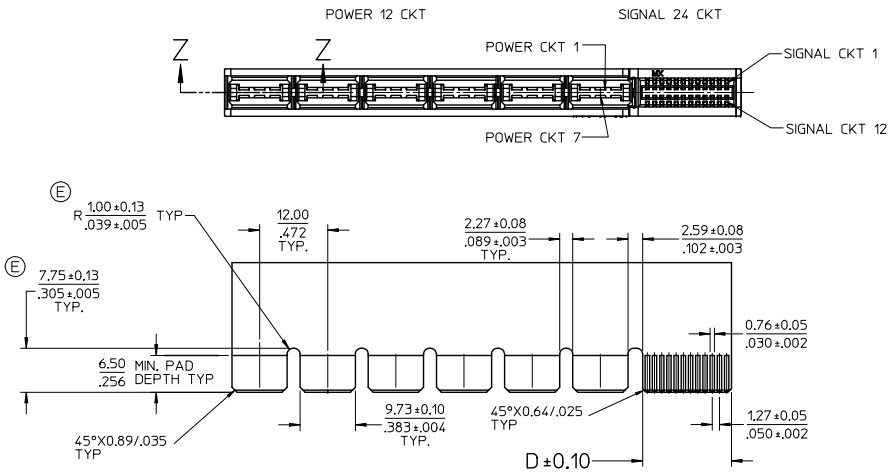

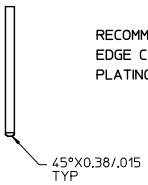

RECOMMENDED EDGE CARD LAYOUT
EDGE CARD THICKNESS: 1.57/.062 ± 0.15/.006
PLATING: GOLD 30 μ INCHES MIN.
OVER 150 μ INCHES NICKEL.

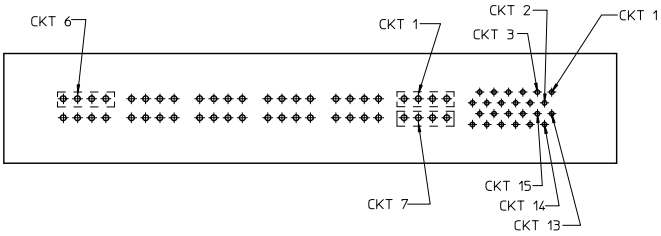

PCB LAYOUT: COMPONENT SIDE
SEE SHT 1 FOR DIMENSIONS

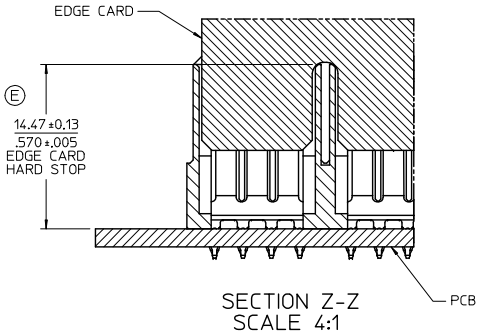

SECTION Z-Z
SCALE 4:1

SEE SHEET 1	EC NO: UCP2015-0571	DRWN:MBANDURA 2015/03/12	CH'KD: APPR:APATEL 2015/04/20
REV	DESCRIPTION		

QUALITY SYMBOLS

GENERAL TOLERANCES (UNLESS SPECIFIED)

	mm	INCH
4 PLACES	± ---	± ---
3 PLACES	± ---	± .010
2 PLACES	± 0.25	± ---
1 PLACE	± ---	± ---
ANGULAR ±1/2°		

DRAFT WHERE APPLICABLE MUST REMAIN WITHIN DIMENSIONS

DIMENSION STYLE: MM/IN
SCALE: 2:1
DESIGN UNITS: METRIC
THIRD ANGLE PROJECTION

		DATE
DRAWN BY	MKARADIMAS	2007/07/18
CHECKED BY	APATEL	2007/07/20
APPROVED BY	JCOMERCI	2009/12/03

TITLE: LPH VERTICAL RECEPTACLE COMPLIANT PIN ASSEMBLY 12CKT PWR CON, PRESS FIT

molex MOLEX INCORPORATED

MATERIAL NO.: SEE CHART
DOCUMENT NO.: SD-46114-120
SHEET NO.: 3 OF 3
SIZE: C

THIS DRAWING CONTAINS INFORMATION THAT IS PROPRIETARY TO MOLEX INCORPORATED AND SHOULD NOT BE USED WITHOUT WRITTEN PERMISSION

tb_frame_C_P_AM_T
Rev. E 2006/04/15