Excellent Integrated System Limited

Stocking Distributor

Click to view price, real time Inventory, Delivery & Lifecycle Information:

Molex Connector Corporation
5000274041

For any questions, you can email us directly:
sales@integrated-circuit.com

Distributor of Molex Connector Corporation: Excellent Integrated System Limited
Datasheet of 5000274041 - CONN PLUG 0.4MM 40POS VERT SMD
Contact us: sales@integrated-circuit.com Website: www.integrated-circuit.com

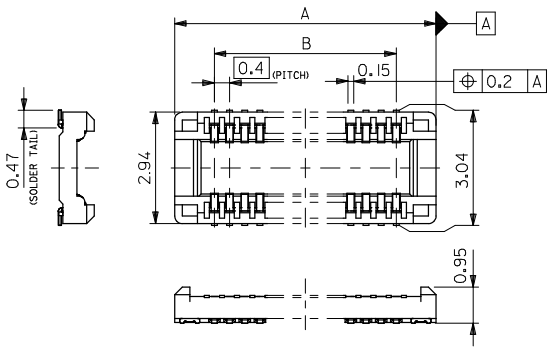

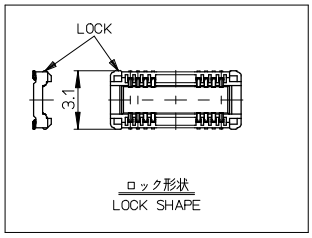

ロック形状
LOCK SHAPE

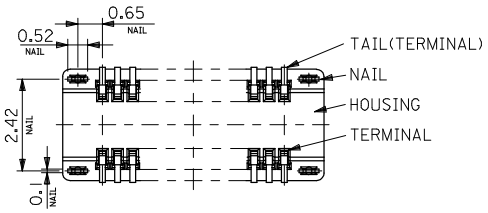

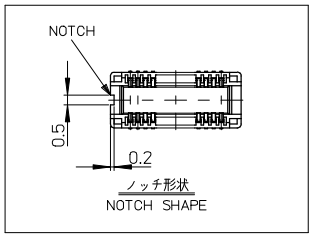

ノッチ形状
NOTCH SHAPE

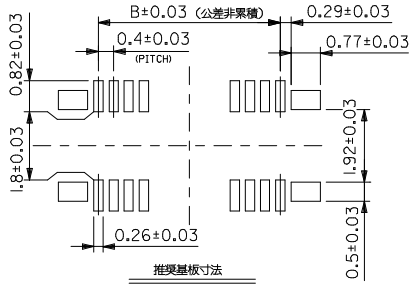

推奨基板寸法
RECOMMENDED P.C.B
PATTERN LAYOUT

注記
NOTES

1. 材質 MATERIAL
   ハウジング : 液晶ポリマーUL94V-0
   HOUSING : LIQUID CRYSTAL POLYMER [LCP] UL94V-0
   ターミナル : 銅合金
   TERMINAL : COPPER ALLOY
   ネール : 銅合金
   NAIL : COPPER ALLOY
2. メッキ仕様 PLATING
   接点部 : 金メッキ 0.1 μm
   CONTACT AREA : GOLD PLATING 0.1 μm
   半田付け部 : 金メッキ 0.1 μm
   SOLDER TAIL AREA : GOLD PLATING 0.1 μm
   下地メッキ : ニッケルメッキ 1.0 μm
   UNDER PLATING : NICKEL PLATING 1.0 μm
   ネール : 錫メッキ 1.0 μmMIN.
   NAIL : TIN PLATING 1.0 μmMIN.
   下地メッキ : ニッケルメッキ 1.0 μmMIN.
   UNDER PLATING : NICKEL PLATING 1.0 μmMIN.
3. テール及びネールの平坦度は 0.1 以下
   TAIL AND NAIL COPLANARITY : 0.1 MAX.
4. 嵌合相手 : 500024 シリーズ。
   MATE WITH : 500024 SERIES.
5. 本製品は 500027-**29 の鉛フリー品である。
   THIS PRODUCT IS LEAD FREE OF 500027-**29.

A	B	EMBOSSED TAPE PKG. ORDER No. オーダー番号	MATERIAL No.	LOCK	NOTCH	CIRCUIT
17.7	15.6	500027-8041	500027-8049	—#—	—#—	80
15.7	13.6	500027-7041	500027-7049	—#—	—#—	70
14.5	12.4	500027-6441	500027-6449	—#—	—#—	64
13.7	11.6	500027-6041	500027-6049	—#—	—#—	60
11.7	9.6	500027-5041	500027-5049	—#—	—#—	50
9.7	7.6	500027-4041	500027-4049	—#—	○	40
8.5	6.4	500027-3441	500027-3449	—#—	—#—	34
7.7	5.6	500027-3041	500027-3049	—#—	—#—	30
6.5	4.4	500027-2441	500027-2449	○	—#—	24
5.7	3.6	500027-2041	500027-2049	○	—#—	20
4.9	2.8	500027-1641	500027-1649	○	—#—	16

500027-**49
MODEL NO.

REVISED
EC NO: J2009-0301 2008/08/27
DRWN:MNABEI 2008/08/28
CHKD:THARUYAMA
APPR:NUKITA 2008/08/28
DESCRIPTION
REV B

GENERAL TOLERANCES (UNLESS SPECIFIED)

10 UNDER	±0.2
10 OVER 30 UNDER	±0.25
30 OVER	±0.3
ANGULAR	±1 °

DRAFT WHERE APPLICABLE MUST REMAIN WITHIN DIMENSIONS

DIMENSION STYLE: MM ONLY
SCALE: ---
DESIGN UNITS: METRIC
THIRD ANGLE PROJECTION

DRAWN BY: M.NABEI DATE: '05/01/27
CHECKED BY: K.TOJO DATE: '05/01/27
APPROVED BY: N.UKITA DATE: '05/01/27
MATERIAL NO.: SEE TABLE

TITLE: 0.4MM B/B CONN. H=0.95
PLUG HS'G ASS'Y
-LEAD FREE-

molex MOLEX INCORPORATED

DOCUMENT NO.: SD-500027-028
SHEET NO.: 1 OF 2

SIZE A3

THIS DRAWING CONTAINS INFORMATION THAT IS PROPRIETARY TO MOLEX INCORPORATED AND SHOULD NOT BE USED WITHOUT WRITTEN PERMISSION

Distributor of Molex Connector Corporation: Excellent Integrated System Limited
Datasheet of 5000274041 - CONN PLUG 0.4MM 40POS VERT SMD
Contact us: sales@integrated-circuit.com Website: www.integrated-circuit.com

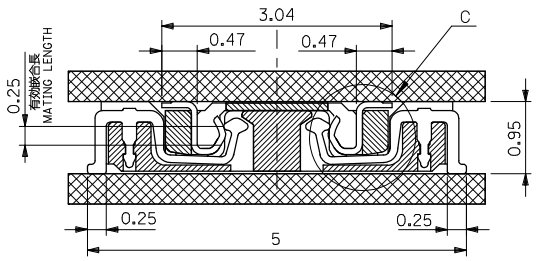

嵌合断面図（参考）
MATED DRAWING

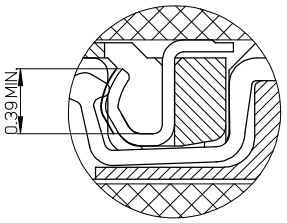

DETAIL C
GOLD PLATED AREA
ON CONTACT

				500027-**49	MODEL NO.
REVISED EC NO: J2009-0301 DRWN:MNABEI 2008/08/27 CHKD:THARUYAMA 2008/08/28 APPR:NUKITA 2008/08/28	GENERAL TOLERANCES (UNLESS SPECIFIED)	DIMENSION STYLE MM ONLY	SCALE ---	DESIGN UNITS METRIC	THIRD ANGLE PROJECTION
	10 UNDER ±0.2	DRAWN BY M.NABEI DATE '05/01/27	TITLE 0.4MM B/B CONN. H=0.95 PLUG HS'G ASS'Y -LEAD FREE-		
	10 OVER 30 UNDER ±0.25	CHECKED BY K.TOJO DATE '05/01/27			
	30 OVER ±0.3	APPROVED BY N.UKITA DATE '05/01/27	molex MOLEX INCORPORATED		
	ANGULAR ±1 °	MATERIAL NO. SEE SHEET 1	DOCUMENT NO. SD-500027-028		SHEET NO. 2 OF 2
B	DRAFT WHERE APPLICABLE MUST REMAIN WITHIN DIMENSIONS	SIZE A3	THIS DRAWING CONTAINS INFORMATION THAT IS PROPRIETARY TO MOLEX INCORPORATED AND SHOULD NOT BE USED WITHOUT WRITTEN PERMISSION		

REV DESCRIPTION

tb_frame_A3_J_ME_S
Rev. E 2006/04/15

EN-02JA(021)

Distributor of Molex Connector Corporation: Excellent Integrated System Limited
Datasheet of 5000274041 - CONN PLUG 0.4MM 40POS VERT SMD
Contact us: sales@integrated-circuit.com Website: www.integrated-circuit.com

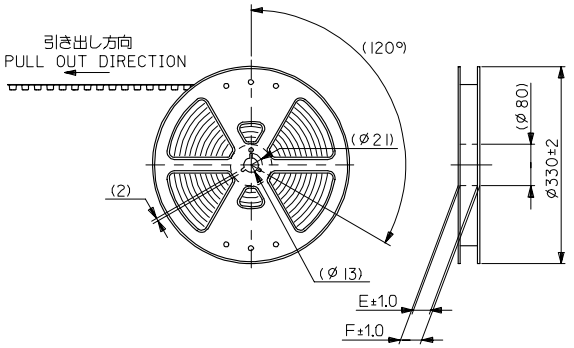

注)
NOTES

1. 製品番号500027-**49　詳細寸法については、製品単体図面を参照下さい。
IN THE PACKAGE PART NUMBER 500027-**49 DETAILED DIMENSIONS, SEE SALES DRAWING FOR CONNECTOR.
2. 梱包数量：2000個/リール
NUMBER OF CONNECTORS : 2000 PCS/REEL.
3. リードテープ長さ
LEAD TAPE LENGTH

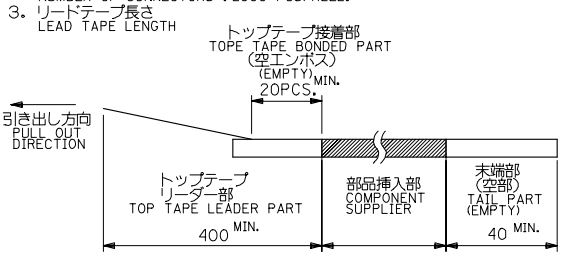

4. トップテープの剥離強度：(剥離方向は下図参照)
PEELING OFF FORCE OF TOP TAPE (PELLING DIRECTION AS SHOWN IN FOLLOWING FIGURE.)
0．1～1．3N (10～130gf)

尚、本規格値は、出荷時に適用。
THIS REQUIREMENT SHOULD BE APPLIED AT SHIPMENT.
(但し、輸送時に剥離が発生しない事。)
(PEEL OFF SHOULD NOT BE ALLOWED,DURING TRANSPORTATION.)

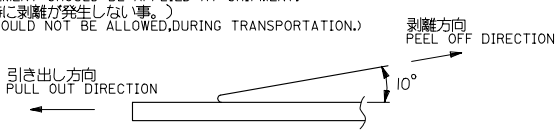

5. 材料
MATERIAL
キャリアテープ：ポリプロピレン (PP)
CARRIER TAPE:POLYPROPYLENE(PP)
トップテープ：PET, PE, PEF
TOP TAPE:PET,PE,PEF
リール：ポリスチレン
REEL : POLYSTYRENE
6. 本製品は 500027-**21 の鉛フリー品である.
THIS PRODUCT IS LEAD FREE OF 500027-**21.

RELEASED EC NO: J2005-2190	DRWN:MNABEI 2005/02/02	CHKD:KTOJO 2005/02/02	APPR:NUKITA 2005/02/02	DESCRIPTION	REV 0	
GENERAL TOLERANCES (UNLESS SPECIFIED)						
10 UNDER	±0.2					
10 OVER 30 UNDER	±0.25					
30 OVER	±0.3					
ANGULAR	±1 °					
DRAFT WHERE APPLICABLE MUST REMAIN WITHIN DIMENSIONS						

DIMENSION STYLE: MM ONLY	SCALE: ---	DESIGN UNITS: METRIC	500027-**41 / MODEL NO. / THIRD ANGLE PROJECTION
DRAWN BY: M.NABEI DATE: '05/01/27	TITLE: 500027-**49 TAPING PACKAGE -LEAD FREE-		
CHECKED BY: K.TOJO DATE: '05/01/27			
APPROVED BY: N.UKITA DATE: '05/01/27	molex MOLEX INCORPORATED		
MATERIAL NO.: SEE CHART	DOCUMENT NO.: SD-500027-029	SHEET NO.: 1 OF 2	
SIZE: A3	THIS DRAWING CONTAINS INFORMATION THAT IS PROPRIETARY TO MOLEX INCORPORATED AND SHOULD NOT BE USED WITHOUT WRITTEN PERMISSION		

tb_frame_A3_J_ME_S
Rev. D 2004/04/02

EN-02JA(021)

Distributor of Molex Connector Corporation: Excellent Integrated System Limited
Datasheet of 5000274041 - CONN PLUG 0.4MM 40POS VERT SMD
Contact us: sales@integrated-circuit.com Website: www.integrated-circuit.com

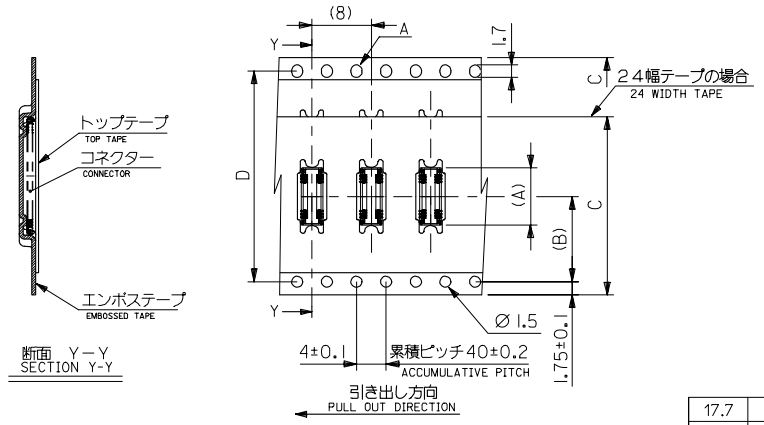

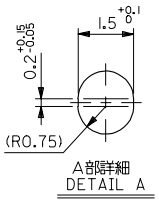

(A)	(B)	C	D	E	F	CONNECTOR	MATERIAL No.	CIRCUIT
17.7	14.2	32±0.3	28.4	33.4	37.4	500027-8049	500027-8041	80
15.7	14.2	32±0.3	28.4	33.4	37.4	500027-7049	500027-7041	70
14.5	14.2	32±0.3	28.4	33.4	37.4	500027-6449	500027-6441	64
13.7	14.2	32±0.3	28.4	33.4	37.4	500027-6049	500027-6041	60
11.7	11.5	24±0.3	—#—	25.4	29.4	500027-5049	500027-5041	50
9.7	11.5	24±0.3	—#—	25.4	29.4	500027-4049	500027-4041	40
8.5	11.5	24±0.3	—#—	25.4	29.4	500027-3449	500027-3441	34
7.7	11.5	24±0.3	—#—	25.4	29.4	500027-3049	500027-3041	30
6.5	11.5	24±0.3	—#—	25.4	29.4	500027-2449	500027-2441	24
5.7	11.5	24±0.3	—#—	25.4	29.4	500027-2049	500027-2041	20
4.9	11.5	24±0.3	—#—	25.4	29.4	500027-1649	500027-1641	16

500027-**41
MODEL NO.

REV	DESCRIPTION		
0	RELEASED EC NO: J2005-2190	DRWN:MNABEI	2005/02/02
		CHKD:KTOJO	2005/02/02
		APPR:NUKITA	2005/02/02

GENERAL TOLERANCES (UNLESS SPECIFIED)

10 UNDER	±0.2
10 OVER 30 UNDER	±0.25
30 OVER	±0.3
ANGULAR	±1 °

DRAFT WHERE APPLICABLE MUST REMAIN WITHIN DIMENSIONS

DIMENSION STYLE: MM ONLY
SCALE: ---
DESIGN UNITS: METRIC
THIRD ANGLE PROJECTION

DRAWN BY: M.NABEI	DATE: '05/01/27	TITLE: 500027-**49 TAPING PACKAGE -LEAD FREE-
CHECKED BY: K.TOJO	DATE: '05/01/27	
APPROVED BY: N.UKITA	DATE: '05/01/27	molex MOLEX INCORPORATED
MATERIAL NO.: SEE CHART		DOCUMENT NO.: SD-500027-029 — SHEET NO.: 2 OF 2

SIZE: A3

THIS DRAWING CONTAINS INFORMATION THAT IS PROPRIETARY TO MOLEX INCORPORATED AND SHOULD NOT BE USED WITHOUT WRITTEN PERMISSION

tb_frame_A3_J_ME_S
Rev. D 2004/04/02

EN-02JA(021)