Excellent Integrated System Limited

Stocking Distributor

Click to view price, real time Inventory, Delivery & Lifecycle Information:

Switchcraft Inc.
RAPC722

For any questions, you can email us directly:
sales@integrated-circuit.com

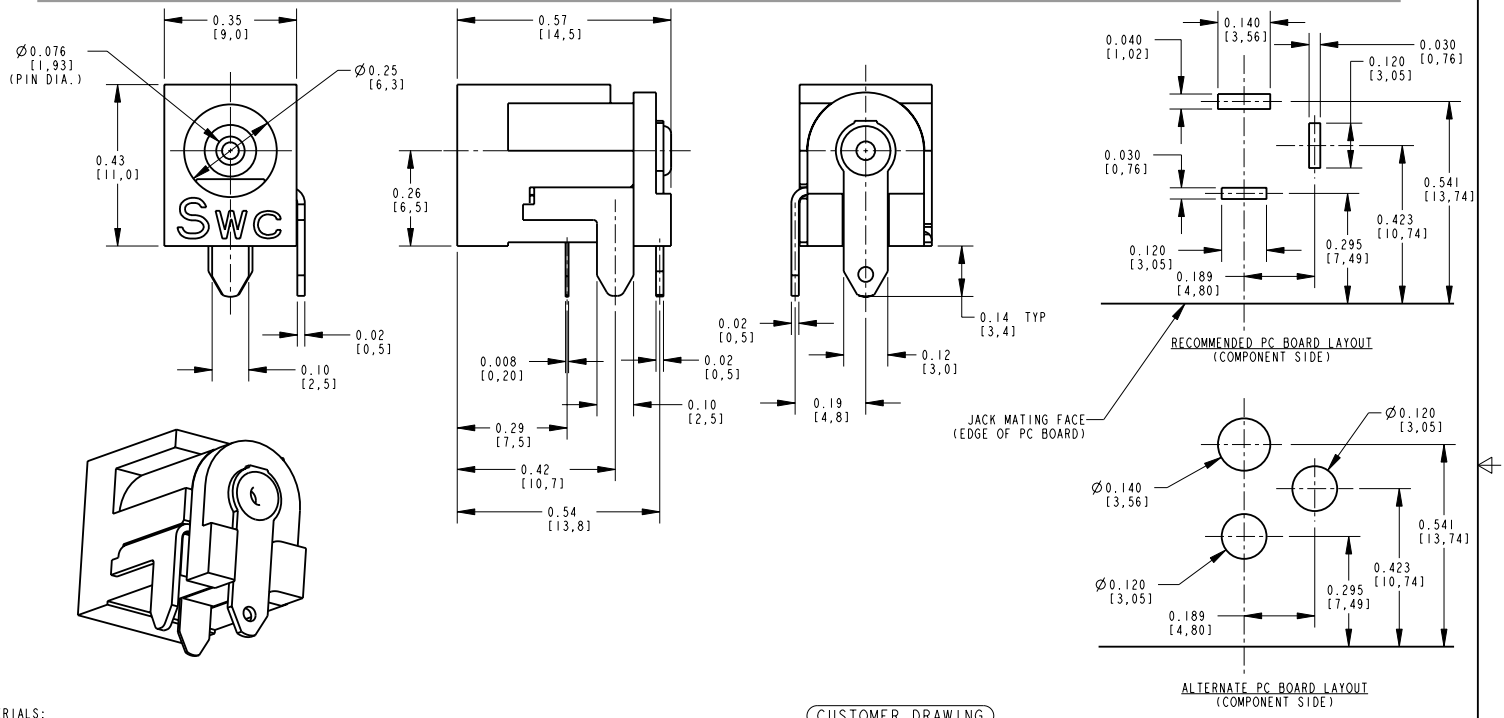

MATERIALS:

HOUSING AND COVER: HIGH GRADE THERMOPLASTIC, UL94V-0 RATED, COLOR BLACK.
CENTER PIN: BRASS, NICKEL PLATED PER QQ-N-290, CLASS I.
PIN AND SHUNT TERMINALS: BRASS, SILVER PLATED PER QQ-S-365.
SLEEVE SPRING: SPRING COPPER ALLOY, SILVER PLATED PER QQ-S-365.

SPECIFICATIONS:

LIFE: 5000 CYCLES.
INSERTION FORCE: 5 LB [2.3 KG] MAX.
WITHDRAWAL FORCE: 0.5 LB [0.2 KG] MIN.
CONTACT RESISTANCE: 30 MILLIOHM MAX, 60 MILLIOHM MAX. AFTER TEST.
INSULATION RESISTANCE: 30 MEGAOHM MIN. @ 100VDC.
DIELECTRIC WITHSTANDING VOLTAGE: 250VAC FOR 1 MINUTE.
CURRENT (CARRYING): 5A.

CUSTOMER DRAWING

REV	ECO NUMBER	DATE	BY	APVD
H	22891	6-15-99	TJK	TJK
G	21359	9-18-96	SG	MA
F	21077	8-28-96	DA	MA
E	20441	11-8-95	MA	MA

REVISIONS

☆ STAR SYMBOL DENOTES CRITICAL DIMENSION

UNLESS OTHERWISE SPECIFIED
1. ALL DIMENSIONS IN INCHES
-TWO PLACE DECIMALS ±0.01
-THREE PLACE DECIMALS ±0.005
-FRACTIONAL DIMENSIONS ±1/64
-ANGLES ±1°
-ALL DIA. CONCENTRIC WITHIN 0.005 T.I.R.
2. FEATURES ON THE SAME CENTERLINE MUST BE ALIGNED WITHIN ±0.002
3. REMOVE ALL BURRS

DO NOT SCALE DRAWING

THIS DRAWING DESCRIBES A DESIGN CONSIDERED PROPRIETARY IN NATURE, DEVELOPED AND MANUFACTURED BY SWITCHCRAFT INC. AND IS RELEASED ON A CONFIDENTIAL BASIS FOR IDENTIFICATION PURPOSES ONLY.

SIZE	WIDTH	MULT	LBS/M	TEMPER

FINISH
SPEC No.
MATERIAL
SPEC No.
FIRST USED ON
SCALE 4:1

DATE DRAWN	BY	CHKD	APVD
4-27-95	MA	SG 1-8-96	MA 1-8-96

Switchcraft®

SHEET 1 OF 1

NAME: POWER JACK, PC MOUNT 0.08 [2,0mm] PIN
PART No.: RAPC722
REV: H

B

ROUTING 146 112