Excellent Integrated System Limited

Stocking Distributor

Click to view price, real time Inventory, Delivery & Lifecycle Information:

Molex Connector Corporation
0003062032

For any questions, you can email us directly:
sales@integrated-circuit.com

Distributor of Molex Connector Corporation: Excellent Integrated System Limited
Datasheet of 0003062032 - CONN PLUG 3POS .062
Contact us: sales@integrated-circuit.com Website: www.integrated-circuit.com

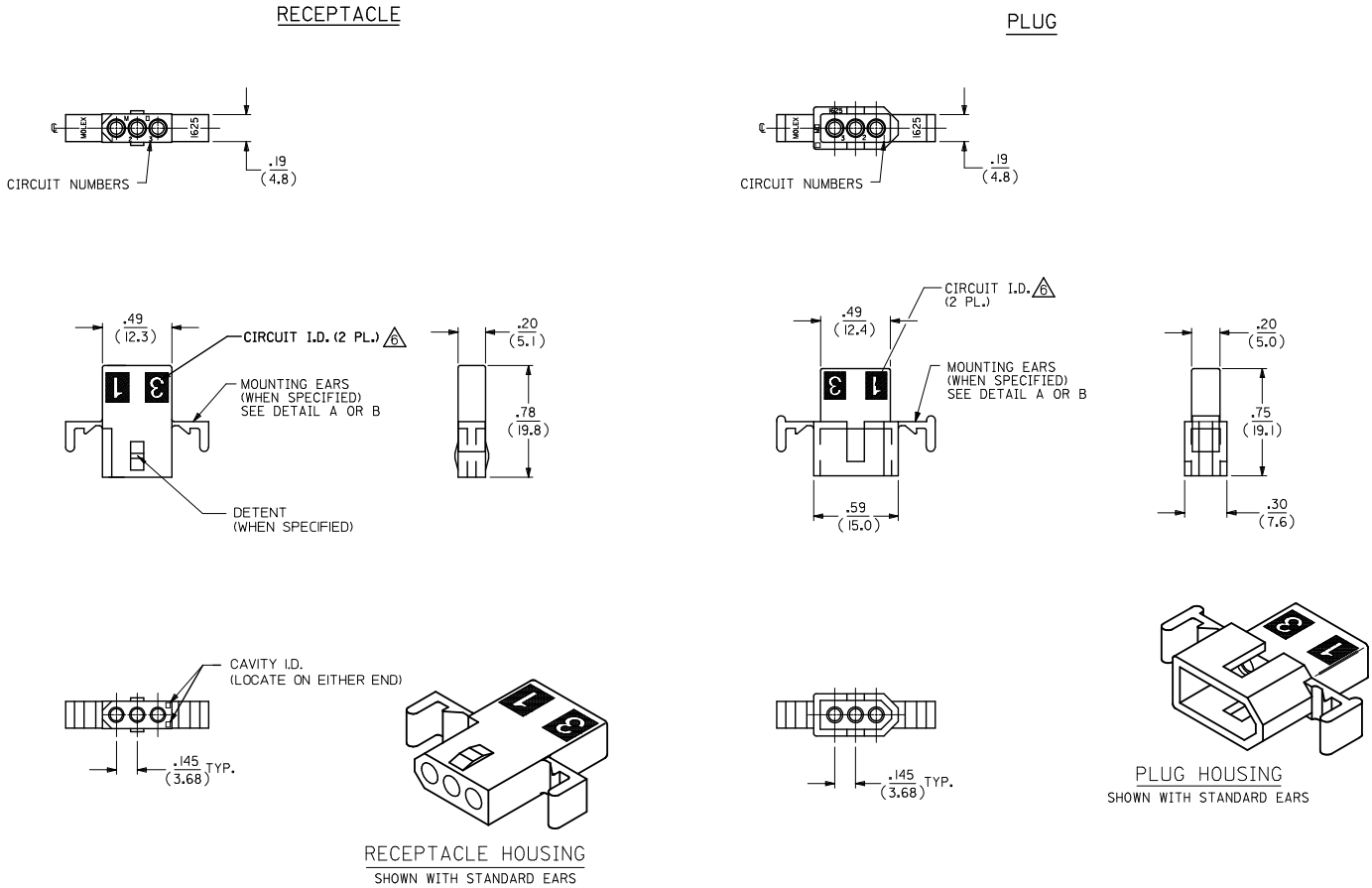

03066031 OBSOLETE EC NO: UCP2015-0278 DRWN:MKIPPER 2014/07/22 CH'KD:JBELL 2014/07/24 APPR:FSMITH 2014/07/31 M4	QUALITY SYMBOLS $\overline{F_A}$ =0 $\overline{F_C}$ =0 $\overline{F_B}$ =0	GENERAL TOLERANCES (UNLESS SPECIFIED) mm / INCH 4 PLACES ±--- ±--- 3 PLACES ±--- ±.010 2 PLACES ±0.25 ±.014 1 PLACE ±0.35 ±--- 0 PLACE ±--- ±--- ANGULAR ±1/2° DRAFT WHERE APPLICABLE MUST REMAIN WITHIN DIMENSIONS	DIMENSION STYLE IN/MM DRAWN BY KBW DATE 1/26/89 CHECKED BY RW DATE 1/26/89 APPROVED BY FSMITH DATE 2014/07/31 MATERIAL NO. SEE CHART	SCALE 2:1	DESIGN UNITS INCH	THIRD ANGLE PROJECTION TITLE PLUG AND RECEPTACLE HOUSINGS, 3 CIRCUIT, .062 DIA. molex DOCUMENT NO. SD-1625-3*	SHEET NO. 1 OF 2

SIZE C

THIS DRAWING CONTAINS INFORMATION THAT IS PROPRIETARY TO MOLEX INCORPORATED AND SHOULD NOT BE USED WITHOUT WRITTEN PERMISSION

tb_frame_C_P_AM_T
Rev. G 2012/01/11

Distributor of Molex Connector Corporation: Excellent Integrated System Limited
Datasheet of 0003062032 - CONN PLUG 3POS .062
Contact us: sales@integrated-circuit.com Website: www.integrated-circuit.com

PLUG

PART NO.	ENG. NO.	
03-06-2031	1625-3P	
03-06-2032	1625-3P1	
03-06-2034	1625-3P4BK	
03-06-7032	1625-3P1BK	OBSOLETE
03-06-2033	1625-3P4	

RECEPTACLE

PART NO.	ENG. NO.	
03-06-1033	1625-3R2	
03-06-1031	1625-3R	
03-06-1032	1625-3R1	
03-06-6031	1625-3RBK	OBSOLETE
03-06-6032	1625-3R1BK	OBSOLETE
03-06-1034	1625-3R3	
03-06-1038	1625-3R4	

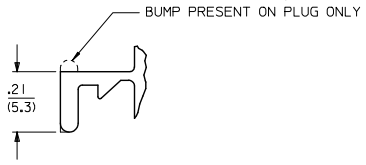

DETAIL A

.062/(1.57) STANDARD MOUNTING EAR
(SCALE 4:1)

LEGEND:

1625-3****

CIRCUIT SIZE

P = PLUG
R = RECEPTACLE

OPTION	STANDARD EARS (PER DETAIL A)	PREBENT EARS (PER DETAIL B)	DETENTS
BLANK	X		X
1			X
2			
3	X		
4		X	X

X = PRESENT

COLOR:

BLANK = NATURAL COLOR
AM = AMBER BK = BLACK BU = BLUE
BN = BROWN GY = GRAY GN = GREEN
OR = ORANGE RD = RED YW = YELLOW

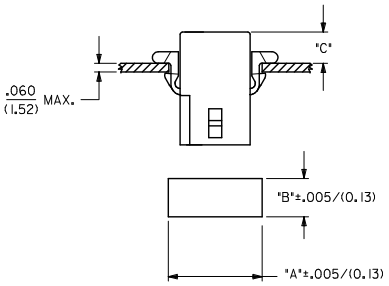

RECOMMENDED PANEL OPENING

HOUSING	DIM. "A"	DIM. "B"	"C" PREBENT EAR	"C" STANDARD EAR
PLUG	.754/(19.15)	.318/(8.08)	.19/(4.8)	.18/(4.6)
RECEPT.	.650/(16.51)	.265/(6.73)	.21/(5.3)	.20/(5.1)

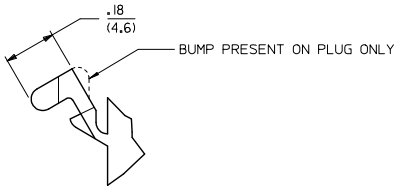

DETAIL B

.062/(1.57)PREBENT MOUNTING EAR
(SCALE 4:1)

NOTES:-
1. MATERIAL: NYLON TYPE 6/6, 94V-2.
2. FINISH: NONE.
3. PRODUCT SPECIFICATION: PS-02-06.
4. PACKAGING SPECS: BULK PACK PER PK-1625-003.
5. ACCEPTS MOLEX .062" SERIES TERMINALS.
6. ETCHED CIRCUIT I.D. NUMBERS ON HOUSING MAY OR MAY NOT BE PRESENT.
7. PARTS CONFORM TO CLASS B REQUIREMENTS OF COSMETIC SPECIFICATION PS-45499-002.

SEE SHEET 1
EC NO: UCP2015-0278 2014/07/22
DRWN:MKIPPER 2014/07/24
CH'KD:JBELL 2014/07/31
APPR:FSMITH
DESCRIPTION
REV
M4

QUALITY SYMBOLS
=0
=0
=0

GENERAL TOLERANCES (UNLESS SPECIFIED)

	mm	INCH
4 PLACES	± ---	± ---
3 PLACES	± ---	± .010
2 PLACES	± 0.25	± .014
1 PLACE	± 0.35	± ---
0 PLACE	± ---	± ---
ANGULAR ±1/2°		

DRAFT WHERE APPLICABLE MUST REMAIN WITHIN DIMENSIONS

DIMENSION STYLE: IN/MM
SCALE: 2:1
DESIGN UNITS: INCH
THIRD ANGLE PROJECTION

DRAWN BY: KBW DATE: 1/26/89
CHECKED BY: RW DATE: 1/26/89
APPROVED BY: FSMITH DATE: 2014/07/31

TITLE: PLUG AND RECEPTACLE HOUSINGS, 3 CIRCUIT, .062 DIA.

molex

MATERIAL NO.: SEE CHART
DOCUMENT NO.: SD-1625-3*
SHEET NO.: 2 OF 2
SIZE: C

THIS DRAWING CONTAINS INFORMATION THAT IS PROPRIETARY TO MOLEX INCORPORATED AND SHOULD NOT BE USED WITHOUT WRITTEN PERMISSION

tb_frame_C_P_AM_T
Rev. G 2012/01/11