Excellent Integrated System Limited

Stocking Distributor

Click to view price, real time Inventory, Delivery & Lifecycle Information:

Mallory Sonalert Products
PH-150Q

For any questions, you can email us directly:
sales@integrated-circuit.com

MALLORY Mallory Sonalert Products Inc.	Part # PH-150Q
Sales Outline Drawing	Revision A

Specifications:

Resonant Frequency (Hz)	500 ~ 7000
Impedance (Ω)	8 ±2
Input Power (Watts RMS)	30
Operating Temperature (°C)	-20 ~ +70
Storage Temperature (°C)	-30 ~ +80
Housing	ABS 757 UL94HB plastic resin (Color: White)
Leading Wire	20 AWG (White, White & Red)
Weight (Grams)	100
Locations	For indoor/outdoor use
Options	For other options contact factory

Dimensions: (units: mm)

ROHS Compliant

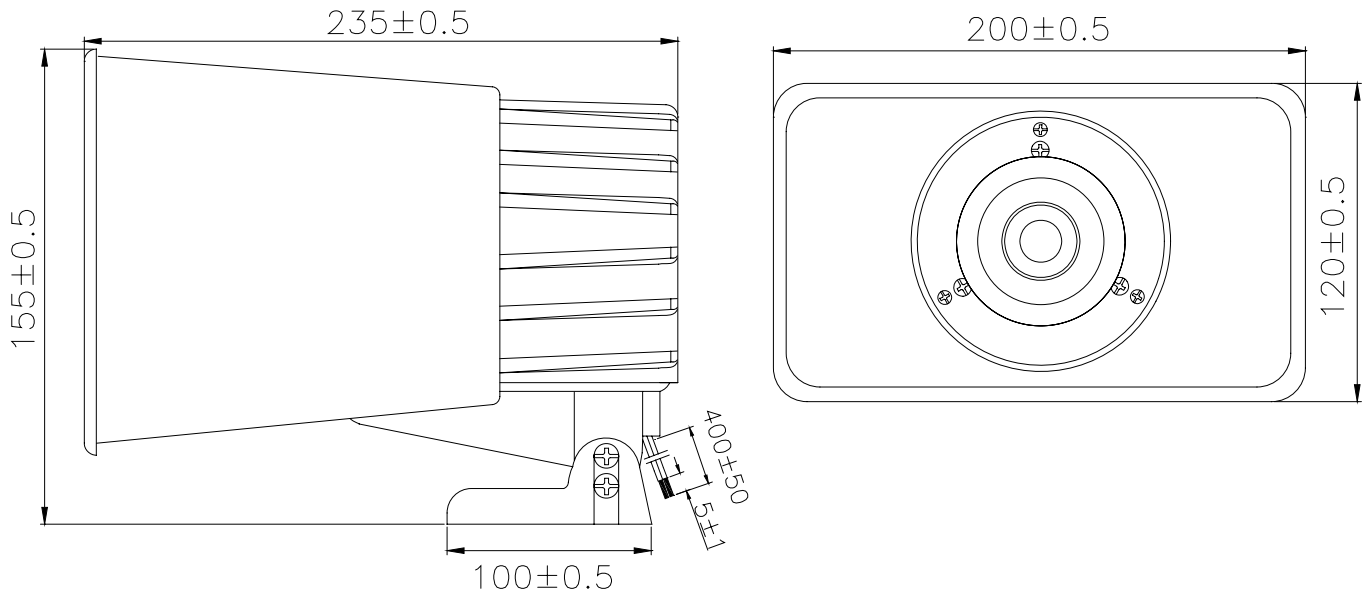

MALLORY SONALERT PRODUCTS, INC.

PH-150Q

Frequency Response: