Excellent Integrated System Limited

Stocking Distributor

Click to view price, real time Inventory, Delivery & Lifecycle Information:

ITT Cannon, LLC
CA3100E22-23PYB

For any questions, you can email us directly:
sales@integrated-circuit.com

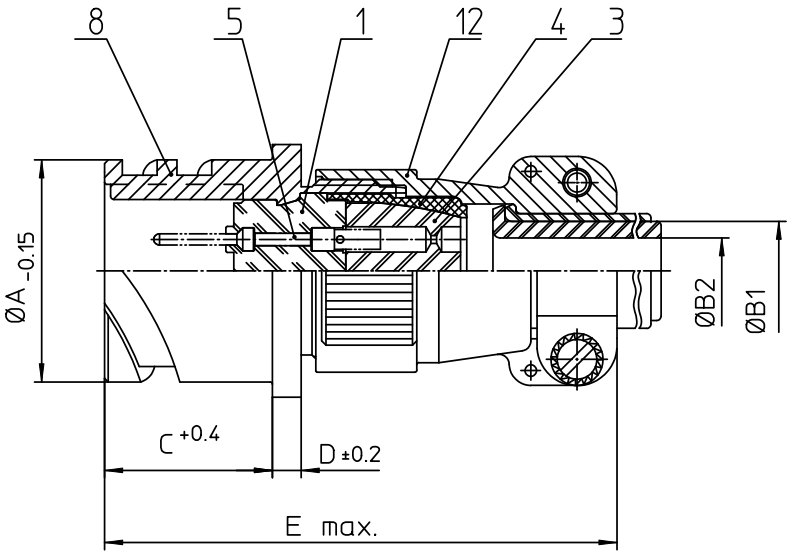

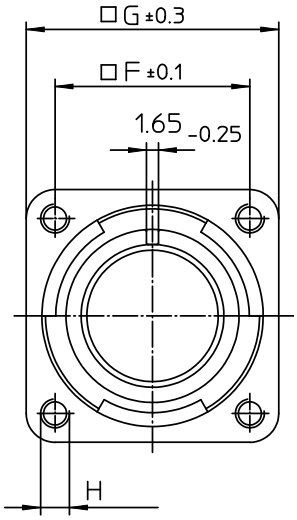

NO.	MASSE / DIMENSIO
A	37.4
B1	15.9
B2	-
C	23.05
D	4
E	72
F	31.8
G	41
H	M4

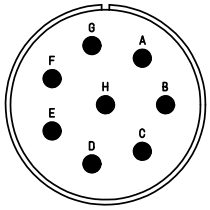

NO.	BESCHREIBUNG / DESCRIPTION
1	ISOLIERKÖRPER STIFT / INSULATOR PIN
3	DICHTKÖRPER / GROMMET
4	ENDRING / ENDRING
5	KONTAKTSTIFT/ CONTACT PIN
8	DOSENGEHÄUSE / SHELL
12	ENDGEHÄUSE / ENDBELL

Note: Due to an automatic nomenclature system, numbers generated may not be sequential.

Specification and Dimensions subject to chang
Drawings illustrate normal insulator positioning

Material Specification:	
Shell Material:	Aluminium alloy
Shell Plating:	Olive drab chromate over cadmium (conductive)
Insulator Material:	CR-Elastomere
Contact Material:	Copper alloy
Contact Plating:	Hard silver

all dimensions are in mm
Dimensions without tolerance indications are general tolerances in acc. with DIN7168m

drawing for
CUSTOMER

ITT
Engineered for life
ITT CANNON GmbH
D - 71384 Weinstadt/Germany

description CA3100E22-23PYB
Wall mounting receptacle
Endbell with clamp and bushing
Solder Cup / Pin / Layout: 22-23

© All rights reserved. Reproduction or issue to third in any form whatever is only permitted with written authorization of ITT Cannon

page 1/1
revision 786 4. Jul 16