Excellent Integrated System Limited

Stocking Distributor

Click to view price, real time Inventory, Delivery & Lifecycle Information:

ITT Cannon, LLC
CA3106F14S-1SA71

For any questions, you can email us directly:
sales@integrated-circuit.com

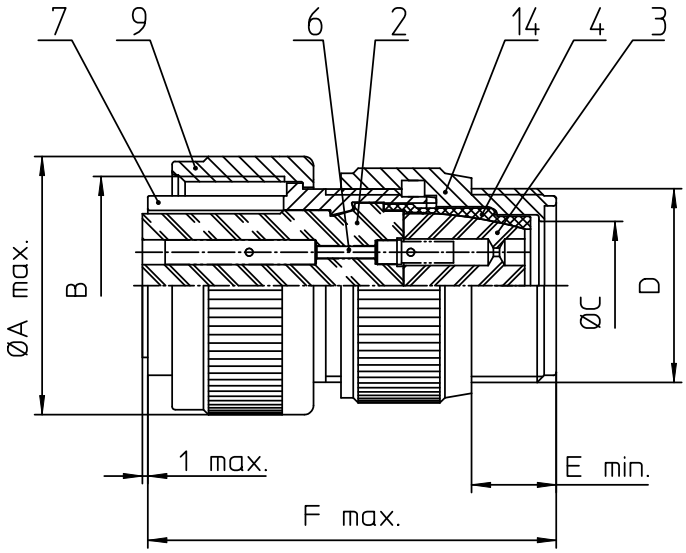

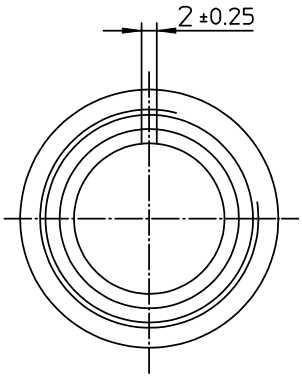

NO.	MASSE / DIMENSIO
A	28.8
B	7/8-20UNEF-2B
C	11.1
D	3/4-20UNEF-2A
E	9.5
F	45

NO.	BESCHREIBUNG / DESCRIPTION
2	ISOLIERKÖRPER BUCHSE / INSULATOR SOCKET
3	DICHTKÖRPER / GROMMET
4	ENDRING / ENDRING
6	KONTAKTBUCHSE / CONTACT SOCKET
7	ZYLINDERGHÄUSE / BARREL
9	ÜBERWURFMUTTER / COUPLING NUT
14	F-ENDGEHÄUSE / F-ENDBELL

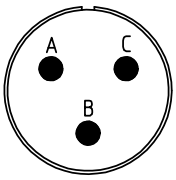

Note: Due to an automatic nomenclature system, numbers generated may not be sequential.

Specification and Dimensions subject to chang
Drawings illustrate normal insulator positioning

Material Specification:	
Shell Material:	Aluminium alloy
Shell Plating:	Electroless Nickel
Insulator Material:	Neoprene
Contact Material:	Copper alloy
Contact Plating:	Hard silver

all dimensions are in mm
Dimensions without tolerance indications are general tolerances in acc. with DIN7168m

drawing for CUSTOMER

ITT
Engineered for life
ITT CANNON GmbH
D - 71384 Weinstadt/Germany

description CA3106F14S-1S-A71
Plug, straight
Endbell for flex tube
Solder Cup / Socket / Layout: 14S-1

© All rights reserved, Reproduction or issue to third in any form whatever is only permitted with written authorization of ITT Cannon

page 1/1
revision 377 3. Jul 16