Excellent Integrated System Limited

Stocking Distributor

Click to view price, real time Inventory, Delivery & Lifecycle Information:

ITT Cannon, LLC
CA3102E32A47S

For any questions, you can email us directly:
sales@integrated-circuit.com

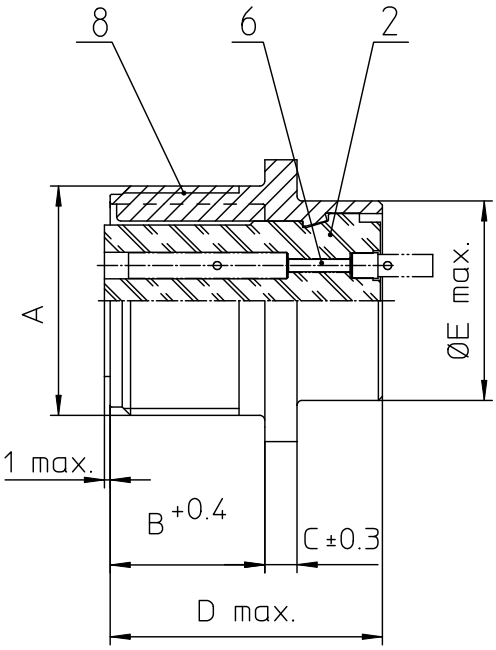

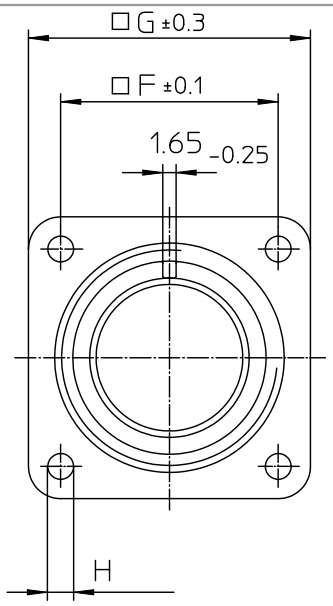

NO.	MASSE / DIMENSIO
A	2-18NS-2A
B	22.2
C	4
D	34.2
E	47.6
F	44.5
G	57
H	4.4

NO.	BESCHREIBUNG / DESCRIPTION
2	ISOLIERKÖRPER BUCHSE / INSULATOR SOCKET
6	KONTAKTBUCHSE / CONTACT SOCKET
8	DOSENGEHÄUSE / SHELL

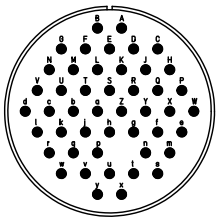

Note: Due to an automatic nomenclature system, numbers generated may not be sequential.

Specification and Dimensions subject to chang
Drawings illustrate normal insulator positioning

Material Specification:	
Shell Material:	Aluminium alloy
Shell Plating:	Olive drab chromate coating over cadmium plating
Insulator Material:	Neoprene
Contact Material:	Copper alloy
Contact Plating:	Hard silver

all dimensions are in mm
Dimensions without tolerance indications are general tolerances in acc. with DIN7168m

drawing for: CUSTOMER

ITT
Engineered for life
ITT CANNON GmbH
D - 75384 Weinstadt/Germany

description: CA3102E32A47S
Box mounting receptacle

Solder Cup / Socket / Layout: 32A47

© All rights reserved. Reproduction or issue to third in any form whatever is only permitted with written authorisation of ITT Cannon

page 1/1
revision 377 3. Jul 16