Excellent Integrated System Limited

Stocking Distributor

Click to view price, real time Inventory, Delivery & Lifecycle Information:

ITT Cannon, LLC
KPT08E18-11S

For any questions, you can email us directly:
sales@integrated-circuit.com

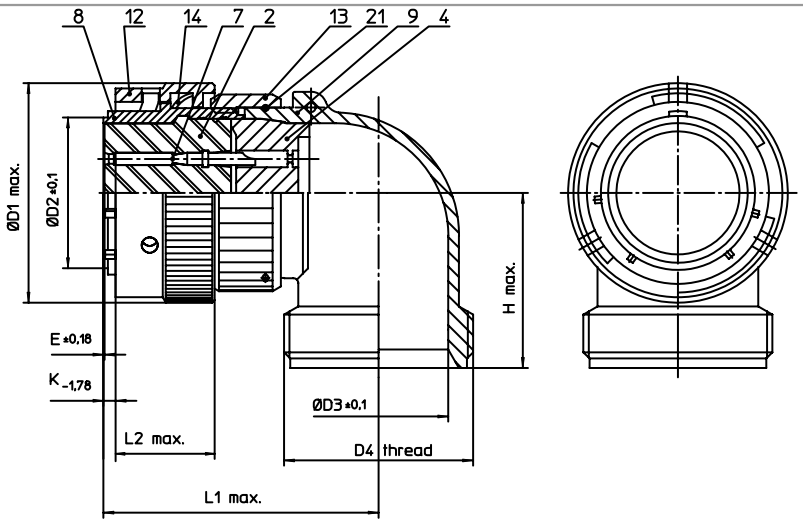

NO.	MASSE / DIMENSIO
D1	35.4
D2	23.9
D3	22.2
D4	1 3/16-18UNEF-2A
E	0.23
H	28.1
K	3.89
L1	44.7
L2	15.9

NO.	BESCHREIBUNG / DESCRIPTION
2	ISOLIERKÖRPER BUCHSE / INSULATOR SOCKET
4	DICHTKÖRPER / GROMMET
7	KONTAKT BUCHSE / CONTACT SOCKET
8	GEHÄUSE / RECEPTACLE
9	ENDGEHÄUSE / ENDBELL
12	ÜBERWURFMUTTER / COUPLING NUT
13	ÜBERWURFMUTTER F. ENDGEH. / COUPLING NUT
14	WELLFEDER / WASHER
21	DRAHT / FIXING WIRE

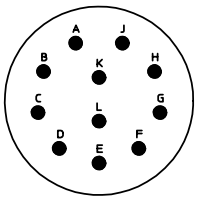

Note: Due to an automatic nomenclature system, numbers generated may not be sequential.

Specification and Dimensions subject to chang
Drawings illustrate normal insulator positioning

Material Specification:	
Shell Material:	Aluminium alloy
Shell Plating:	Olive drab chromate over cadmium plating
Insulator Material:	Polychloroprene
Contact Material:	Copper alloy, gold plated
Contact Plating:	Copper alloy, gold plated

all dimensions are in mm
Dimensions without tolerance indications are general tolerances in acc. with DIN7168m

drawing for
CUSTOMER

ITT
Engineered for life
ITT CANNON GmbH
D - 71384 Weinstadt/Germany

description KPT08E1811S
Plug with 90° termination
Grommet seal
Solder Cup / Socket / Layout: 18-11

© All rights reserved. Reproduction or issue to third in any form whatever is only permitted with written authorization of ITT Cannon

page 1/1
revision 1013 5. Jul 16