Excellent Integrated System Limited

Stocking Distributor

Click to view price, real time Inventory, Delivery & Lifecycle Information:

BUD Industries, Inc.
IPS-3921

For any questions, you can email us directly:
sales@integrated-circuit.com

Distributor of BUD Industries, Inc.: Excellent Integrated System Limited
Datasheet of IPS-3921 - BOX ALUM NATURAL 5.98"L X 4.41"W
Contact us: sales@integrated-circuit.com Website: www.integrated-circuit.com

PART NAME	IP67 SERIES NEMA DIE CAST ALUMINUM BOX	PART No.	IPS-3921	REVISION DATE	1/21/2011

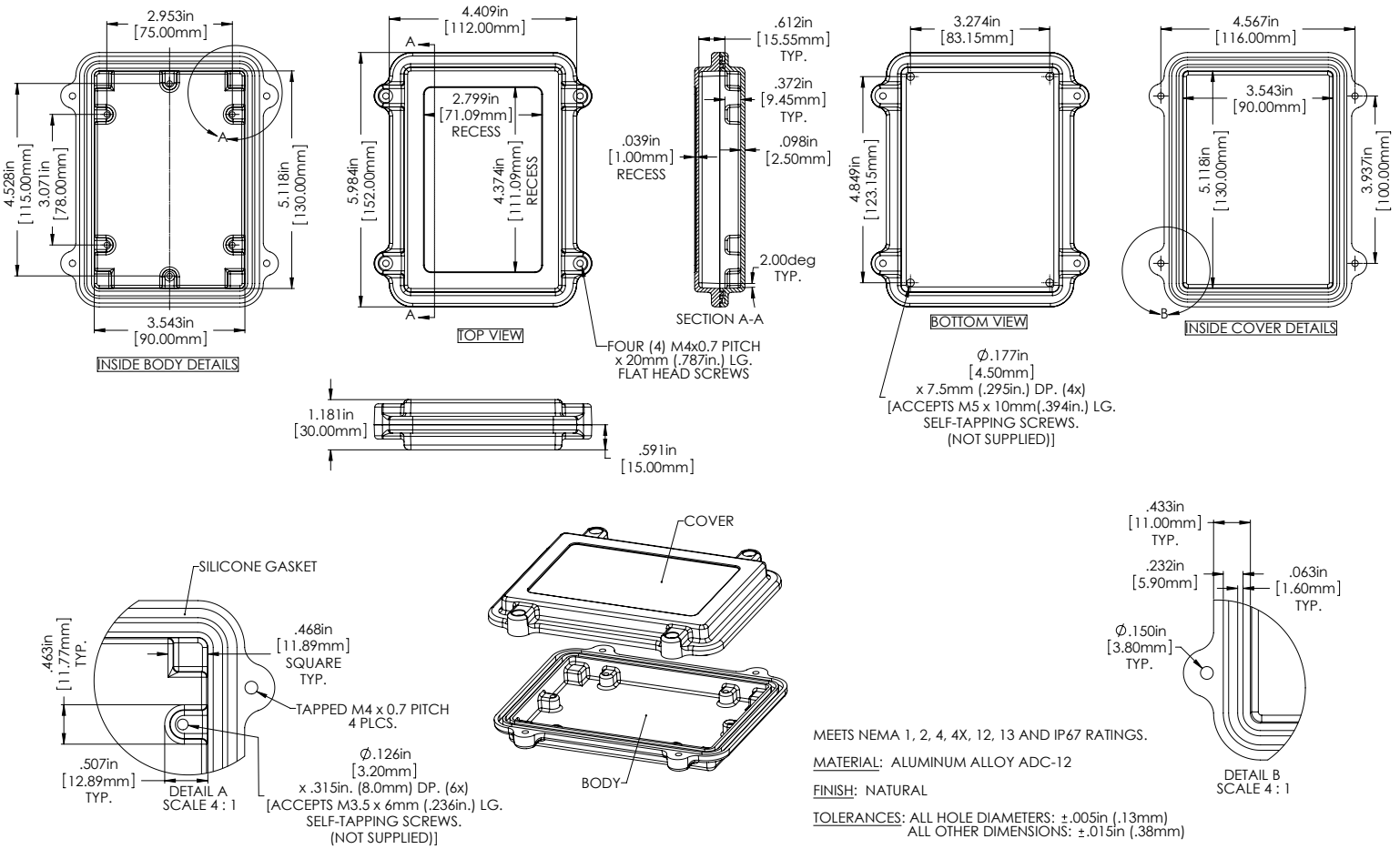

MEETS NEMA 1, 2, 4, 4X, 12, 13 AND IP67 RATINGS.

MATERIAL: ALUMINUM ALLOY ADC-12

FINISH: NATURAL

TOLERANCES: ALL HOLE DIAMETERS: ±.005in (.13mm)
ALL OTHER DIMENSIONS: ±.015in (.38mm)