Excellent Integrated System Limited

Stocking Distributor

Click to view price, real time Inventory, Delivery & Lifecycle Information:

Bel Fuse Inc.
135-3701-301

For any questions, you can email us directly:
sales@integrated-circuit.com

MMCX Right Angle
PC Mount Jack Receptacle

INCHES (MILLIMETERS)
CUSTOMER DRAWINGS AVAILABLE UPON REQUEST

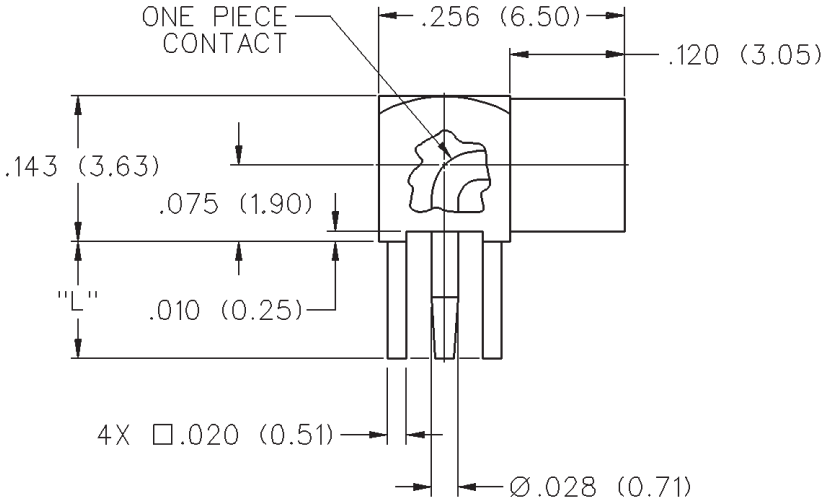

"L"	PART NUMBER
.115 (2.92)	135-3701-301

Mounting Hole Layout

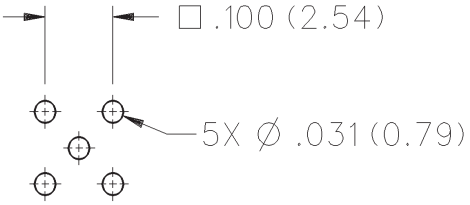

MMCX - 50 Ohm Connectors

Specifications

ELECTRICAL RATINGS

Impedance: 50 ohms

Frequency Range: Connectors ..... 0-6 GHz
Dummy loads ..... 0-1 GHz

VSWR: (f = GHz)

	Straight Cabled Connectors	Right Angle Cabled Connectors
.047 dia flexible	1.20	1.14 + .07f
RG-178, RG-316, RG-316DS	1.20	1.25
.086 semi-rigid	1.15	1.15
Uncabled receptacles, dummy loads		N/A

Working Voltage: Connectors ..... 170 Vrms at sea level†
Dummy loads ..... N/A

Dielectric Withstanding Voltage: Connectors...500 Vrms at sea level†
Dummy loads ..... N/A

Insulation Resistance: 1000 megohms min

Contact Resistance: (milliohms maximum)

	Initial	After Environmental
Center contact (straight cabled connectors and uncabled receptacles)	5.0	8.0
Center contact (right angle cabled connectors)	5.0	15.0
Outer contact (all connectors)	1.0	1.5
Braid to body	1.5	N/A

Corona Level: Connectors ..... 190 volts min at 70,000 feet†
Dummy loads ..... N/A

Insertion Loss: (dB max tested at 1 GHz)
Straight cabled connectors 0.1
Right angle cabled connectors 0.2
Uncabled receptacles, dummy loads ..... N/A

RF Leakage: (dB minimum, tested at 2.5 GHz)
Flexible cable connectors ..... -60 dB
.086 semi-rigid ..... -70 dB
Dummy loads ..... N/A

RF High Potential Withstanding Voltage: (400 Vrms at 4 and 7 MHz)†

Power Rating (Dummy Load): - 0.5 watt @ +25°C, derated to 0.25 watt @ +125° C

†Avoid user injury due to misapplication.
See safety advisory definitions inside front cover.

MECHANICAL RATINGS

Engagement Design: Series MMCX

Engagement/Disengagement Force: 8 lbs. max axial engagement
1.4 lbs. min axial disengagement

Contact Retention: 2.0 lbs. minimum axial force

Cable Retention:

	Axial Force* (pounds)	Torque (in-oz)
Connectors for .047 flexible	3.5	N/A
Connectors for RG-178	7.0	N/A
Connectors for RG-316	20.0	N/A
Connectors for RG-316DS	25.0	N/A
Connectors for .086 semi-rigid	30.0	16

*Or cable breaking strength whichever is less.

Durability: ..... 500 cycles minimum

ENVIRONMENTAL RATINGS (Meets or exceed the applicable paragraph of MIL-C-39012)

Operating Temperature: Connectors ..... - 65°C to + 165°C
Dummy loads ..... - 65°C to + 125°C

Thermal Shock: Connectors: MIL-STD-202, Method 107, Condition C, except -55°C to + 155°C (N/A dummy loads)

Corrosion: MIL-STD-202, Method 101, Condition B (N/A dummy loads)

Shock: MIL-STD-202, Method 213, Condition B (N/A dummy loads)

Vibration: MIL-STD-202, Method 204, Condition D (N/A dummy loads)

Moisture Resistance: MIL-STD-202, Method 106 (N/A dummy loads)

MATERIAL SPECIFICATIONS

Bodies: Brass per QQ-B-626, gold plated* per MIL-G-45204 .00001" min.

Contacts: Beryllium copper per QQ-C-530, gold plated* per MIL-G-45204 .00003" min.

Interface Spring: Beryllium copper per QQ-C-530, gold plated* per MIL-G-45204 .00003" min.

Insulators: PTFE fluorocarbon per ASTM D 1710 and ASTM D 1457

Crimp Sleeves: Copper per WW-T-799 or brass per QQ-B-626, gold plated per MIL-G-45204 .00001" min.

Mounting Hardware: Brass per QQ-B-626 or QQ-B-613, gold plated per MIL-G-45204 .00001" min.

*All gold plated parts include a .00005" min nickel barrier layer.

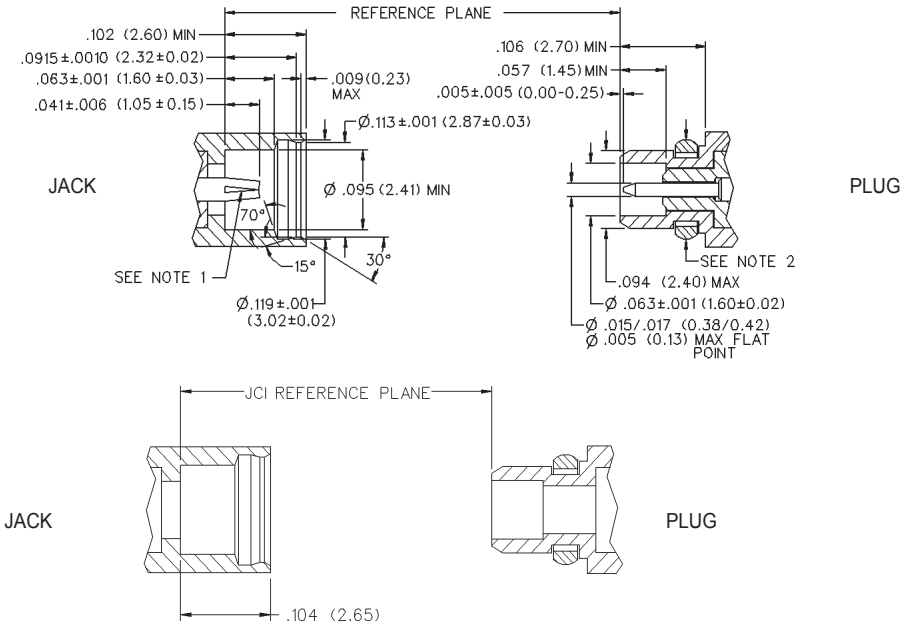

Mating Engagement for MMCX Series

1. ID of contact to meet VSWR mating characteristics and connector durability when mated with a dia .016 +/- .001 male contact.
2. Must meet the force to engage and disengage when mated with mating part.